Butterfly Valve Metal

Construction

The GEMÜ 490 Edessa butterfly valve is lined with TFM™ (PTFE)/PFA to suit aggressive chemical applications. It is based on the design of concentric soft seal valves. The construction enables many possible combinations of disc, shut-off seal and body. Disc and shaft are one-piece. Different designs of body and shut-off seal are available. The wafer and lugged body versions are available in sizes DN 40 - 1200 (1½″ - 48″).

Features

- Suitable for inert and corrosive* gaseous and liquid media in the chemical industry and in water treatment
- Seal material TFM™ (FDA 21CRF 177.1550)
- Installation length acc. to ISO 5752/20, EN 558-1/20, API 609 category A
- Top flange acc. to EN ISO 5211
- Max. operating pressure 6/10 bar
- Connection standards PN 10, PN 16, ASME B16.5 cl. 150, JIS 10K
- Leak test acc. to. EN 12266-1/P12 leakage rate A
- The butterfly valve complies with the safety requirements of Annex I of the European Pressure Equipment Directive 2014/68/EU for fluids of group 1 and 2
- ATEX compliant version for potentially explosive areas of group II, zones 0, 1, 2 (or 20, 21 and 22) available
- “TA Luft“ certificate (German Clean Air Act) available

*see information on working medium on page 2

Exploded drawing

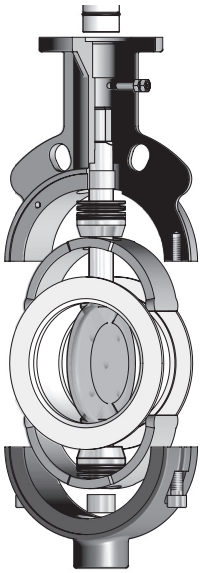

GEMÜ 490

GEMÜ 491

GEMÜ 497

GEMÜ 498

GEMÜ® Edessa 490, 491, 497, 498

Advantages of the TFM™* (PTFE) shut-off seal

TFM™ is manufactured from PTFE and a 1% content of perfluoropropyl vinyl ether (PPVE). While the properties of conventional PTFE (excellent chemical resistance, application in a wide temperature range and resistance to embrittlement or ageing etc.) will be maintained, the PPVE additive leads to a better distribution of the PTFE particles and thus to a higher density of the molecular structure.
The following extra advantages result:

- Significantly better cold flow properties (measured as a deformation under load): Same cold flow properties as PTFE with 25% glass fibres.
- Reduced permeability or increased blocking properties.
- The smooth surface allows only slight abrasion of the shut-off seal and creates less abrasive particles in the medium.

* TFM is a registered trademark of Dyneon

A: Permanent deformation after cyclic load

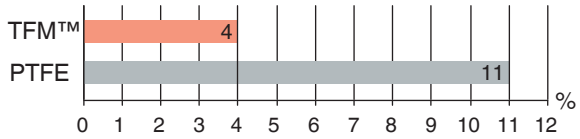

Load: 150 bar for 100 hours, temperature 23°C
Permanent deformation in %, 24 hrs after load removal

B. Permeability of various media

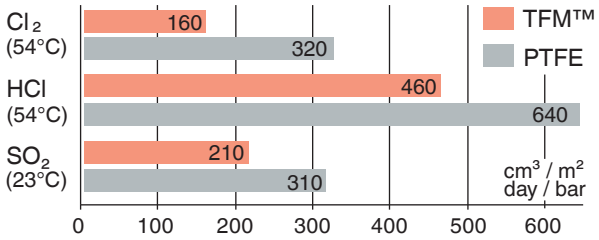

Permeability of TFM™ compared to conventional PTFE (thickness: 1mm)

C. Surface nature at 50x magnification

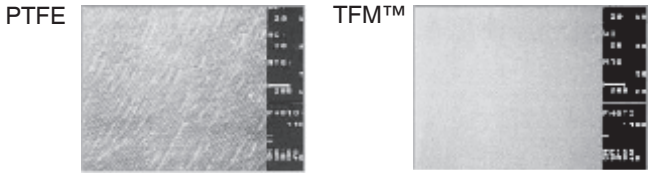

Technical data

Working medium

Inert, corrosive, gaseous and liquid media which have no negative impact on the physical and chemical properties of the disc and seal material.

Max. perm. pressure of working medium

DN 40 - 450 (1½″- 18″)	10 bar
DN 500 - 600 (20″- 24″)	6 bar
DN 700 - 1200 (28″- 48″)	3 bar

Vacuum

Can be used up to a vacuum of 50 mbar (absolute)

This values are for room temperature and air. The values may deviate for other medias and other temperatures.

Max. perm. temp. of working medium

Standard TFM™ (PTFE)	-20 to 200°C

No water hammer permissible

	Connection	Kv value	Weight [kg]	
DN		[m³/h]	Wafer	Lug
25	1″	28	-	2.6
40	1½″	102	2.5	2.5
50	2″	124	3	5
65	2½″	211	4	7
80	3″	318	5	8.1
100	4″	660	6.3	10.8
125	5″	985	7.7	14.5
150	6″	1244	10	15.8
200	8″	2523	16.5	24.6
250	10″	3514	24.5	33.3
300	12″	5315	37	57
350	14″	8134	87*	87
400	16″	11571	107*	107
450	18″	15519	-	152
500	20″	19308	-	185
600	24″	24807	-	306
700	28″	30887	-	442
(750)	30″	34744	-	490
800	32″	39789	-	630
900	36″	55653	-	781
1000	40″	62690	-	946
(1050)	42″	70528	-	985
1200	48″	92100		1212

Body configuration Lug (thread holes drilled through

Pressure-temperature diagram

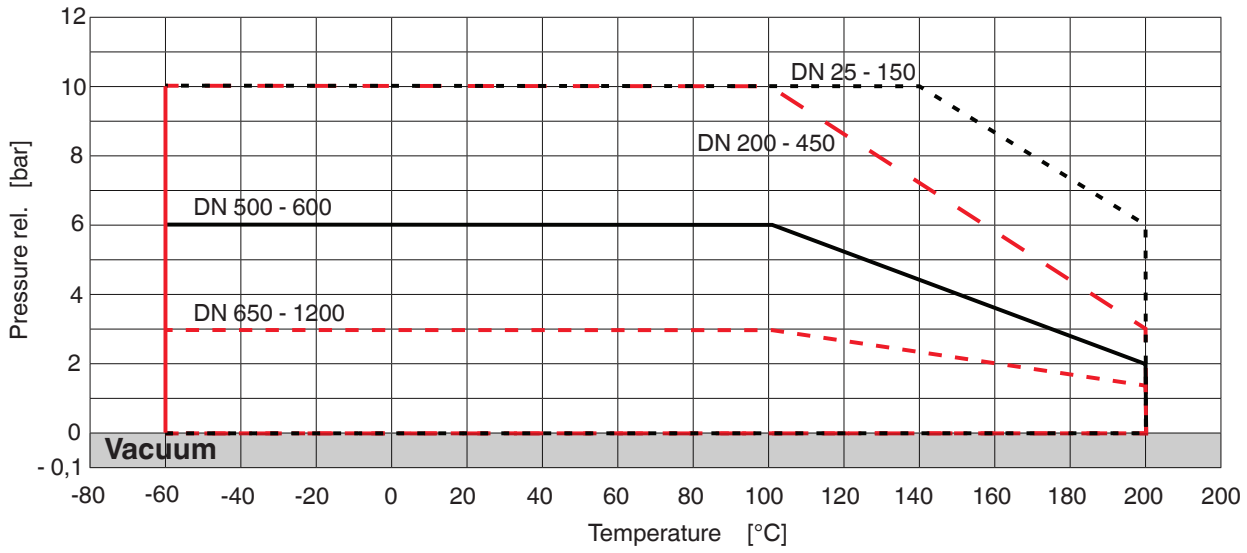

TFM shut off seal characteristics in vacuum applications

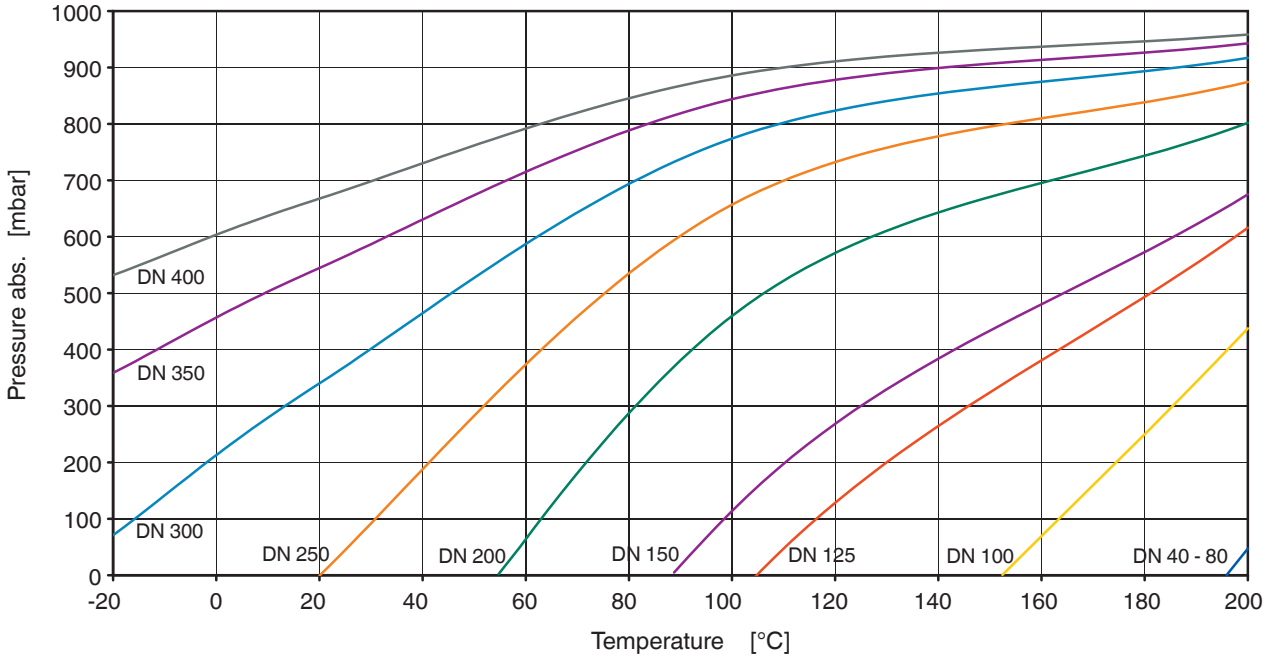

PTFE shut off seal characteristics in vacuum applications and characteristics for nominal sizes > DN 400, on request

Technical data

Torque for actuators [Nm]

Initial breakaway torque*																						
DN	25	40	50	65	80	100	125	150	200	250	300	350	400	450	500	600	700	(750)	800	900	1000	1200
Inches	1″	1½″	2″	2½″	3″	4″	5″	6″	8″	10″	12″	14″	16″	18″	20″	24″	28″	30″	32″	36″	40″	48″
[Nm]	22	22	26	36	46	60	80	110	167	278	333	450	500	600	650	889	1500	2000	2300	2700	3500	4800

* The indicated initial breakaway torque includes 10 % safety margin.

Max. allowable torque																						
DN	25	40	50	65	80	100	125	150	200	250	300	350	400	450	500	600	700	(750)	800	900	1000	1200
Inches	1″	1½″	2″	2½″	3″	4″	5″	6″	8″	10″	12″	14″	16″	18″	20″	24″	28″	30″	32″	36″	40″	48″
Disc/shaft material - Stainless steel (Code S, F, J, P, C)																						
[Nm]	48	48	89	89	89	183	183	327	456	664	664	1227	1227	2909	2909	6069	6069	10374	10374	10374	10374	10374
Disc/shaft material - Hastelloy (Code H)																						
[Nm]	-	31	57	57	57	118	118	211	295	457	457	845	845	2004	2004	4181	4181	7147	7147	7147	7147	-
Disc/shaft material - Titanium (Code T)																						
[Nm]	-	32	59	59	59	121	121	216	302	469	469	866	866	2053	2053	4283	4283	7321	7321	7321	7321	-

Availability / code - Body configuration / connection

Wafer

	Nominal size											
Flange	40	50	65	80	100	125	150	200	250	300	350	400
DIN EN 1092-1-PN10	3*	3	3	3	3	3	3	3	3	3	2*	2*
DIN EN 1092-1-PN16	3*	3	3	3	3	3	3	3	3	3	3	3*
ASME B16.5 cl. 150	D*	3	3	3	3	3	3	3	3	3	D	D*
JIS 10K	G*	G	G	G*	G*	G*	G	G*	G	G*	O	O
AS-2129 Table D	O	O	O	O	O	O	O	O	O	O	O	O
AS-2129 Table E	O	O	O	O	O	O	O	O	O	O	O	O
SANS 1123-1000/3	O	O	O	O	O	O	O	O	O	O	O	O

* Lug body drilled

Lug

Flange	25	40	50	65	80	100	125	150	200	250	300	350
DIN EN 1092-1-PN10	3	3	3	3	3	3	3	3	2	2	2	2
DIN EN 1092-1-PN16	3	3	3	3	3	3	3	3	3*	3*	3*	3*
ASME B16.5 cl. 150	D	D	D	D	D	D	D	D	D	D	D	D
JIS 10K	G*	G*	G*	G*	G*	G*	G*	G	O	G*	O	O
AS-2129 Table D	O	O	O	O	O	O	O	O	O	O	O	O
AS-2129 Table E	O	O	O	O	O	O	O	O	O	O	O	O
SANS 1123-1000/3	O	O	O	O	O	O	O	O	O	O	O	O

Flange	400	450	500	600	700	800	900	1000	1200			
DIN EN 1092-1-PN10	2	2	2	2	2	2	2					
DIN EN 1092-1-PN16	3*	O	O	O	O	O	O					
ASME B16.5 cl. 150	D	D	D	D	O	D	D					
JIS 10K	O	O	O	O	O	O	G					
AS-2129 Table D	O	O	O	O								
AS-2129 Table E	O	O	O	O								
SANS 1123-1000/3	O	O	O	O		O						

Note: Please use a weld neck flange type 11 for all flanges.

Parts list

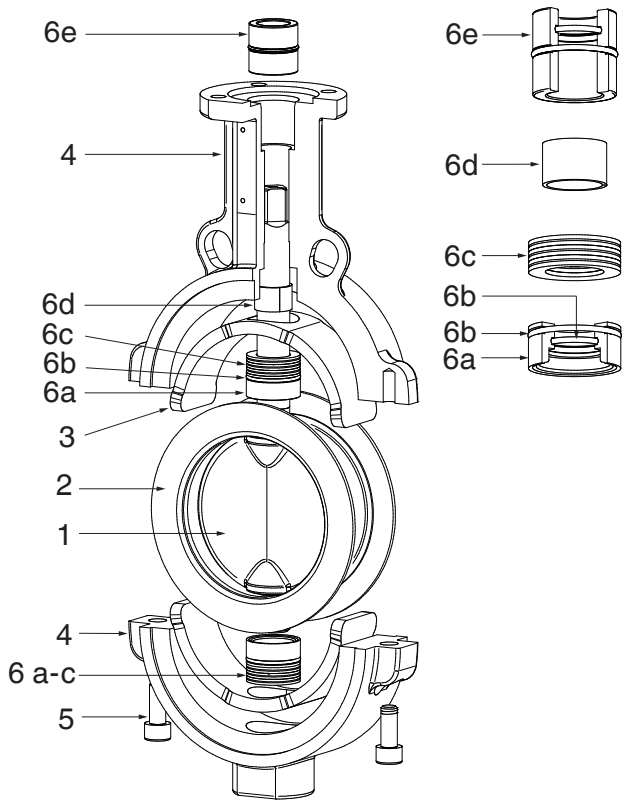

Item.	Designation	Material
1	Disc	see order data
2	Seal	see order data
3	Inlay	see order data
4	2-piece body	see order data
5	Screw	
6a	Pressure packages	1.4301
6b	O-ring	FKM (Fluor-Kautschuk)
6c	Spring	1.8159
6d	DU bush	Steel, PTFE coated
6e	Bearing bush	POM, FKM (Fluorine rubber)

Order data

1 Type	Code
Butterfly valve with bare shaft	490
Butterfly valve with pneumatic actuator	491
Butterfly valve with manual operator	497
Butterfly valve with motorized actuator	498

2 Nominal size	Code
DN 40 - DN 900	40 - 900

3 Body configuration		Code
Wafer	(DN 40 to DN 400)	W
Lug	(DN 25 to DN 1200)	L

4 Operating pressure

	Nominal size		
	25 - 450	500, 600	700 - 1200
	Code		
PS 3 bar			0
PS 6 bar		1	
PS 10 bar	2		
Standard			

5 Connection

		Nominal size			
		25-150	200-300	350-400	450-1200
		Code			
Wafer	PN 10	3	3	2	
	PN 16	3	3	3	
Lug	PN 10	3	2	2	2
	PN 16	3	3	3	3
Standard					

6 Body material	Code
EN-GJS-400-18-LT (GGG 40.3), Epoxy coated 120µm	3
Stainless steel 316L	4
Duroplast (VE-CF)	6
Steel S355J2G3	8

7 Disc/shaft material	Code
Stainless steel 1.4469, DN 40-200; Stainless steel 1.4404/316L, DN 250-900	S
Stainless steel, 1.4462 polished, DN 40-200; Ra < 0,8 µm	F
Stainless steel 1.4404/316L, polished; Ra < 0,8 µm	J
Stainless steel 1.4404/316L, electropolished; Ra < 0,4 µm	G
Stainless steel, PFA encapsulated, FDA approval	P
Stainless steel, PFA encapsulated, electrically conductive	C*
Titanium Grade 2	T
Hastelloy C22	H
* ATEX version (Color of the disc: black)	

8 Seal material	Code
TFM/FKM (steam, FDA certification)	5D
TFM/EPDM (FDA certification)	5E
TFM/FKM (FDA certification)	5F
TFM/silicone (FDA certification)	5S
TFM/EPDM (FDA certification), electrically conductive	LE*
TFM/FKM (FDA certification), electrically conductive	LF*
TFM/silicone (FDA certification), electrically conductive	LS*
PTFE/EPDM (FDA certification)	PE
PTFE/FKM (FDA certification)	PF
PTFE/silicone (FDA certification)	PS
* ATEX version (Color of the seal: black)	

9 Control function		Code
Butterfly valve with bare shaft	Type 490	F
Butterfly valve with manual operator	Type 497	0
Normally closed (NC)	Type 491	1
Normally open (NO)	Type 491	2
Double acting (DA)	Type 491	3

10 Operator size	Code
490 (Column 10)	see page 7
491 (Column 10)	see page 8 and 10
497 (Column 10)	see page 12
498 (Column 12,13,14)	see page 15 and 16

11 Special function	Code
ATEX version (only butterfly valve with bare shaft 490)	X

Order example	1	2	3	4	5	6	7	8	9	10	11		
Code	497	50	W	2	3	3	S	5S	0	SHL11			

Other designs and materials on request

Body dimensions [mm]

Body configuration - Wafer[1] (code W)																				
DN	INCH	A	B	E	øa	f	DIN		ASME B16.5 cl. 150		JIS 10K			H	I	W	ØX	ØY	ØZ	ISO
DIN	ASME						øy	ØG	øy	ØG	øy	ØG	n							
40[2]	1½″	70	95	17	65	10	4x18	110	2x16	98.4	19	105	4	142*	33	7	46.4	34	76	F05
50	2″	56	130	17	90	12	2x18	125	2x19	120.6	19	120	2	104	43	6	50.0	31	85	F07
65[3]	2½″	67	146	17	90	12	2x18	145	2x19	139.7	19	140	2	128	46	11	62.0	48	106	F07
80	3″	84	165	17	90	12	2x18	160	2x19	152.4	19	150	2	144	46	17	75.0	63	122	F07
100	4″	100	185	17	90	12	2x18	180	2x19	190.5	19	175	2	164	52	27	100.1	90	143	F07
125	5″	110	202	17	90	12	2x18	210	2x22	215.9	23	210	2	194	56	38	124.7	118	166	F07
150	6″	125	217	22	90	12	2x22	240	2x22	241.3	23	240	2	220	56	47	141.3	137	193	F07
200	8″	158	245	26	125	16	2x22	295	2x22	298.4	23	290	2	274	60	71	195.1	189	251	F10
250	10″	190	270	30	125	16	2x22	350	2x26	361.9	25	355	2	330	68	92	244.2	239	301	F10
300	12″	225	308	30	125	16	2x22	400	2x26	431.8	25	400	2	380	78	112	295.2	290	349	F10
350	14″	256	330	28	150	18	16x22	476.2	12x1″	445.0	25	445	16	571	92	125	335.5	328	414	F12
400	16″	292	365	28	150	18	16x22	515	12x1″	510.0	25	510	16	643	102	146	389.9	377	460	F12

[1] Body material - Duroplast (VE-CF): Lug body configuration with machined threaded holes
[2] Lug body configuration with machined threaded holes
[3] DN 65 with 4 flange holes

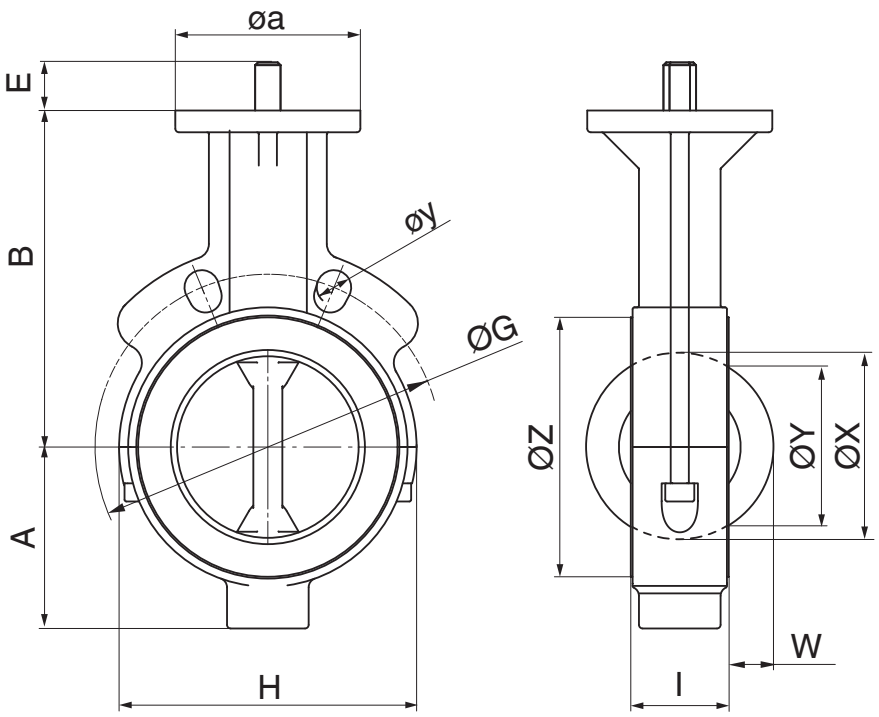

Body dimensions [mm]

Body configuration Lug (code L)													
DN DIN	INCH ASME	A	B	E	øa	f	H	l	W	ØX	ØY	ØZ	ISO
25	1"	53	94	17	65	10	138	41	3	DN40	22	60	F05
40	1½″	70	95	17	65	10	142	33	7	46,4	34	76	F05
50	2″	58	130	17	102	12	153	43	6	50,0	31	85	F07
65	2½″	65	146	17	102	12	173	46	11	62,0	48	106	F07
80	3″	88	165	17	102	12	210	46	17	75,0	63	122	F07
100	4″	102	185	17	102	12	245	52	27	100,1	90	143	F07
125	5″	116	202	17	102	12	272	56	38	124,7	118	166	F07
150	6″	127	217	22	102	12	295	56	47	141,3	137	193	F07
200	8″	160	245	26	152	16	364	60	71	195,1	189	251	F10
250	10″	193	270	30	152	16	431	68	92	244,2	239	301	F10
300	12″	227	308	28	152	16	511	78	112	295,2	290	349	F10
350	14″	256	330	28	152	18	571	92	125	335,5	328	414	F12
400	16″	292	365	37	152	18	643	102	146	389,9	377	460	F12
450	18″	311	400	37	175	20	684	114	164	437,9	417	515	F14
500	20″	340	435	47	175	20	745	127	184	491,4	477	570	F14
600	24″	398	510	47	210	20	863	154	215	579,9	560	672	F16
700	28″	511	576	47	210	35	1000	154			676		F16
750	30″	482	608	90	210	35	1040	154	289		716	851	F16
800	32″					35							
900	36″	573	684	90	300	35	1232	154	360		860	1016	F25
1000	40"	732	732	56	300	35	1380	154	408	DN1000	957	1120	F25
1050	42″	660	768	90	300	35	1402	154	434		1009	1170	F25
1200	48"	905	905	56	300	35	1530	154	508	DN1200	1160	1305	F25

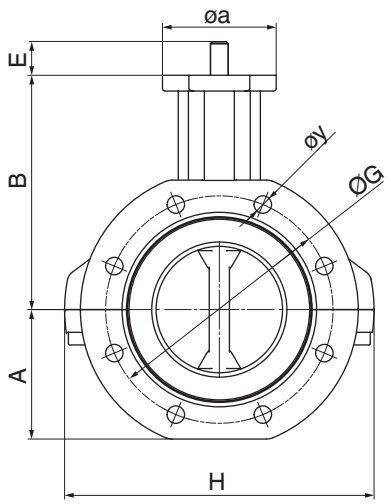

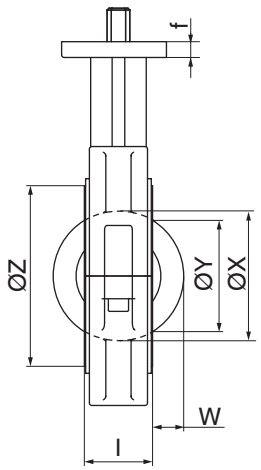

Connections							
DN	INCH	DIN		ASME B16.5 cl. 150		JIS 10K	
DIN	ASME	PN 10, 16 øy	PN 10, 16 ØG	øy	ØG	øy	ØG
25	1"	4x14	85	4x16	79.4	-	-
40	1½″	4xM16	110	4x1/2″-13UNC	98.4	4xM16	105
50	2″	4xM16	125	4x5/8″-11UNC	120.6	4xM16	120
65	2½″	4xM16	145	4x5/8″-11UNC	139.7	4xM16	140
80	3″	8xM16	160	4x5/8″-11UNC	152.4	8xM16	150
100	4″	8xM16	180	8x5/8″-11UNC	190.5	8xM20	175
125	5″	8xM16	210	8x3/4″-10UNC	215.9	8xM20	210
150	6″	8xM20	240	8x3/4″-10UNC	241.3	8xM20	240

DN	INCH	DIN				ASME B16.5 cl. 150		JIS 10K	
DIN	ASME	PN 10 øy	PN 10 ØG	PN 16 øy	PN 16 ØG	øy	ØG	øy	ØG
200	8″	8xM20	295	12xM20	295	8x3/4″-10UNC	298.4	12xM20	290
250	10″	12xM20	350	12xM24	355	12x7/8″-9UNC	361.9	12xM22	355
300	12″	12xM20	400	12xM24	410	12x7/8″-9UNC	431.8	16xM22	400
350	14″	16xM20	460	16xM24	470	12x1″-8UNC	476.2	16xM22	445
400	16″	16xM24	515	16xM27	525	16x1″-8UNC	539.7	16xM24	510
450	18″	20xM24	565	-	-	16x1⅛″-7UNC	577.8	-	-
500	20″	20xM24	620	-	-	20x1⅛″-7UNC	635.0	-	-
600	24″	20xM27	725	-	-	20x1¼″-7UNC	749.3	-	-
700	28″	24xM27	840						
750	30″			-	-	28x1¼″-7UNC	914.4	-	-
800	32″								
900	36″	28xM30	1050	-	-	32x1½″-6UNC	1085.8	-	-
1000	40"	28x36	1160	36x42	1200,2	-	-		
1050	42″			-	-	36x1½″-6UNC	1257.3	-	-
1200	48"	32x36	1380	44x42	1422.4	-	-		

10 Dimensions / order data - Type 490 - Butterfly valve with bare shaft [mm]

DN 40 - 150

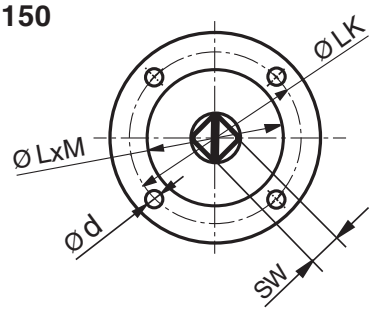

DN 200 - 900

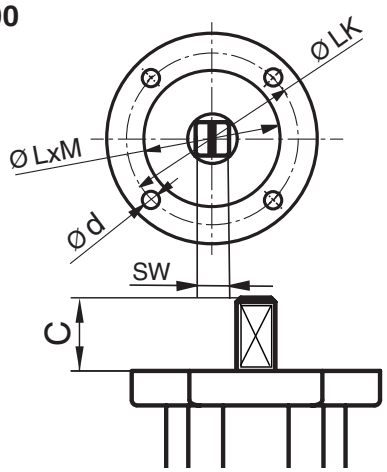

Operator flange									
DN	ISO	ØLK	Ød	f	Shaft connection	SW	C	ØLxM	Code
25	F05	50	4x7	10	D	9	17	36x3.5	05D9
40	F05	50	4x7	10	D	9	17	36x3,5	05D9
50	F07	70	4x9	12	D	11	17	56x3,5	07D11
65	F07	70	4x9	12	D	11	17	56x3,5	07D11
80	F07	70	4x9	12	D	11	17	56x3,5	07D11
100	F07	70	4x9	12	D	14	17	56x3,5	07D14
125	F07	70	4x9	12	D	14	17	56x3,5	07D14
150	F07	70	4x9	12	D	17	22	56x3,5	07D17
200	F10	102	4x11	16	L	19	26	71x3,5	10L19
250	F10	102	4x11	16	L	22	30	71x3,5	10L22
300	F10	102	4x11	16	L	22	30	71x3,5	10L22
350	F12	125	4x13	18	L	27	28	87x3,5	12L27
400	F12	125	4x13	18	L	27	28	87x3,5	12L27
450	F14	140	4x17	20	L	36	37	102x4,5	14L36
500	F14	140	4x17	20	L	36	37	102x4,5	14L36
600	F16	165	4x21	20	L	46	47	131x5,5	16L46
700	F16	165	4x22	35	L	46	47	131x5,5	16L46
750				35					
800	F25	254	8x17	35	L	55	56	202x5,5	25L55
900	F25	254	8x17	35	L	55	56	202x5,5	25L55
1000	F25	254	8x17	35	L	55	56	202x5.5	25L55
1050	F25	254	8x17	35	L	55	56	202x5.5	25L55
1200	F25	254	8x17	35	L	55	56	202x5.5	25L55

Order example	1	2	3	4	5	6	7	8	9	10	11		
Code	490	Order data butterfly valve (page 4)								07D11			

Technical data - GEMÜ 491 with pneumatic actuator type ADA/ASR

Control medium

Filtered, dry compressed air, non-corrosive medium

Temperature range

-30 ... +100 °C, other temperatures on request

Control pressure

6 - 8 bar

Angle of rotation

±5° adjustable (85° - 95°) 90°

10 Order data - GEMÜ 491 with pneumatic actuator type ADA/ASR

10 Actuator version*				
DN	Pneumatic double acting	Code	Pneumatic single acting	Code
40	ADA0020U F03F05 Y S09 A	BU02AB0	ASR0040U S14 F05 Y S14 A	AU04KB0
50	ADA0080U F05F07 Y S17 A	BU08AC0	ASR0080U S14 F05F07 Y S17 A	AU08KC0
65	ADA0080U F05F07 Y S17 A	BU08AC0	ASR0130U S14 F05F07 Y S17 A	AU13KC0
80	ADA0080U F05F07 Y S17 A	BU08AC0	ASR0130U S14 F05F07 Y S17 A	AU13KC0
100	ADA0080U F05F07 Y S17 A	BU08AC0	ASR0200U S14 F07F10 Y S17 A	AU20KE0
125	ADA0130U F05F07 Y S17 A	BU13AC0	ASR0300U S14 F07F10 Y S22 A	AU30KD0
150	ADA0130U F05F07 Y S17 A	BU13AC0	ASR0300U S14 F07F10 Y S22 A	AU30KD0
200	ADA0300U F07F10 Y S22 A	BU30AD0	ASR0850U S14 F10F12 Y S27 A	AU85KG0
250	ADA0500U F10 Y S22 A	BU50AF0	ASR1200U S14 F10F14 Y S27 A	A12UKH0
300	ADA0500U F10 Y S22 A	BU50AF0	ASR1200U S14 F10F14 Y S27 A	A12UKH0
350	ADA0850U F10F12 Y S27 A	BU85AG0	ASR1750U S14 F14 Y S36 A	A17UKK0
400	ADA0850U F10F12 Y S27 A	BU85AG0	ASR1750U S14 F14 Y S36 A	A17UKK0
450	ADA1200U F10F14 Y S36 A	B12UAH0	ASR1750U S14 F14 Y S36 A	A17UKK0
500	ADA1200U F10F14 Y S36 A	B12UAH0	ASR2100U S14 F14 Y S46 A	A21UK10
600	ADA1200U F10F14 Y S36 A	B12UAH0	ASR2100U S14 F16 Y S46A	A21UKL0

Technical data for liquids +20 to +80°C with control pressure 6 bar

Order example	1	2	3	4	5	6	7	8	9	10			
Code	491	Order data butterfly valve (page 4)								BU85AGA			

Stroke limiter on request

Actuator dimensions ADA/ASR [mm]

ADA/ASR 00010-0850U

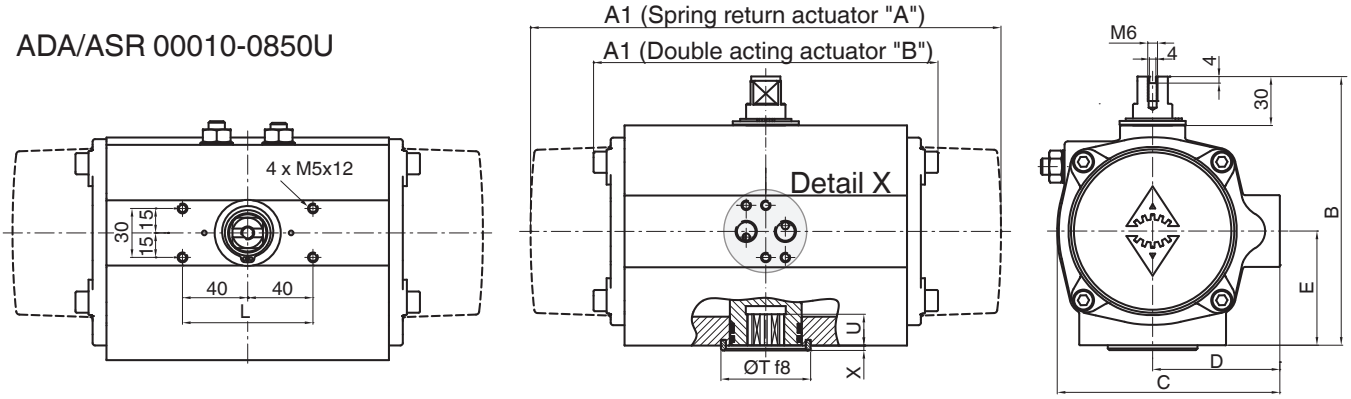

ADA/ASR 1200U-4000U

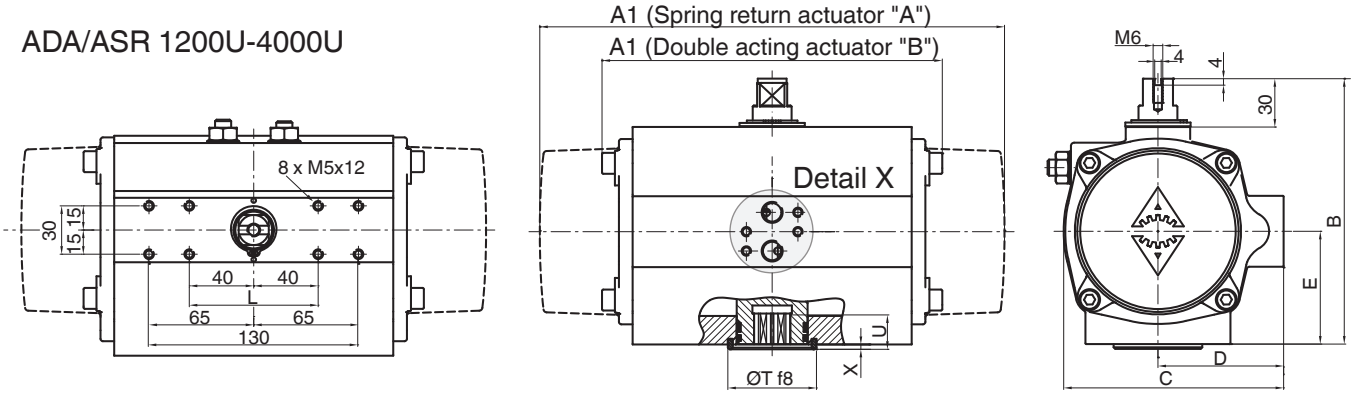

ADA 00010

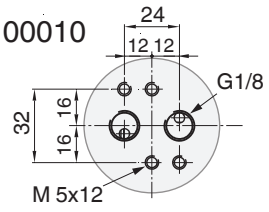

Detail X

ADA/ASR 0020U-1750U

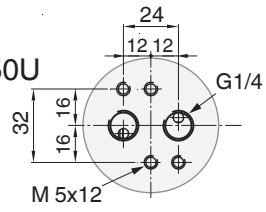

Detail X

ADA/ASR 2100U-4000U

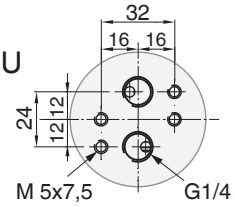

ADA/ASR	0020U			0040U		0080U	0130U	0200U	0300U	0500U	0850U	1200U	1750U	2100U	2500U	4000U
ISO 5211	F03/ F05	F04	F05	F04	F05	F05	F05	F07	F07	F10	F10	F10	F14	F16	F16	F16
Octagonal	9	14		14		17	17	17	22	22	27	36	36	46	46	55
Air connector	G¼			G¼		G¼	G¼	G¼	G¼	G¼	G¼	G¼	G¼	G¼	G¼	G¼
A	145			158		177	196	225	273	304	372	439	461	510	518	630
A1	163			195		217	258	299	348.5	397	473	560	601	702	738	940
B	96			115		137	147	165	182	199	221	249	280	313	383	434
C	76			91		111	122	135.5	152.5	173	191.5	212.5	242.5	276.5	356	415
D	48			56		66	71	78	86	96	106	116	131	148	177.5	213
E	34			45		55	60	70	80	85	98	114	130	147	176.5	201
ØT	25	35		35		55	55	55	70	70	85	100	100	130	130	200
U	10	12		12		19	22	23	24	32	39	48	50	50	58	60
Weight [kg]																
ADA	1.4			2.1		3.0	3.8	5.6	8.5	11.2	16.9	25.8	32.5	49.0	69.6	129.4
ASR	1.5			2.3		3.7	4.8	7.3	10.8	15.4	22.2	34.3	46.0	68.0	99.9	182.9

Technical data - GEMÜ 491 with pneumatic actuator type DR/SC

Control medium

Filtered, dry compressed air, non-corrosive medium

Temperature range

-30 ... +100 °C, other temperatures on request

Control pressure

6 - 8 bar

Angle of rotation

20° adjustable (75° - 95°) 90°

10 Order data - GEMÜ 491 with pneumatic actuator type DR/SC*

10 Actuator size				
DN	Pneumatic double acting	Code	Pneumatic single acting	Code
40	DR0015U F03F05 N S11 A	DU01AW0	SC0060U 6 F05F07 N S14 A	SU06KP0
50	DR0030U F05F07 N S14 A	DU03AP0	SC0100U 6 F05F07 N S17 A	SU10KC0
65	DR0060U F05F07 N S14 A	DU06AP0	SC0100U 6 F05F07 N S17 A	SU10KC0
80	DR0060U F05F07 N S14 A	DU06AP0	SC0100U 6 F05F07 N S17 A	SU10KC0
100	DR0060U F05F07 N S14 A	DU06AP0	SC0150U 6 F05F07 N S17 A	SU15KC0
125	DR0100U F05F07 N S17 A	DU10AC0	SC0220U 6 F07F10 N S22 A	SU22KD0
150	DR0150U F07F10 N S22 A	DU15AD0	SC0300U 6 F07F10 N S22 A	SU30KD0
200	DR0220U F07F10 N S22 A	DU22AD0	SC0450U 6 F10F12 N S27 A	SU45KG0
250	DR0300U F07F10 N S22 A	DU30AD0	SC0900U 6 F10F12 N S27 A	SU90KG0
300	DR0450U F10F12 N S27 A	DU45AG0	SC1200U 6 F10F12 N S27 A	S12UKG0
350	DR0450U F10F12 N S27 A	DU45AG0	SC1200U 6 F10F12 N S27 A	S12UKG0
400	DR0450U F10F12 N S27 A	DU45AG0	SC1200U 6 F10F12 N S27 A	S12UKG0
450	DR0900U F14 N S36 A	DU90AK0	SC2000U 6 F14 N S36 A	S20UKK0
500	DR0900U F14 N S36 A	DU90AK0	SC2000U 6 F14 N S36 A	S20UKK0
600	DR0900U F14 N S36 A	DU90AK0	SC2000U 6 F16 N S46 A	S20UKL0

Technical data for liquids +20 to +80°C with control pressure 6 bar

Order example	1	2	3	4	5	6	7	8	9	10			
Code	491	Order data butterfly valve (page 4)								DU15AE0			

Stroke limiter on request

Actuator dimensions DR/SC [mm]

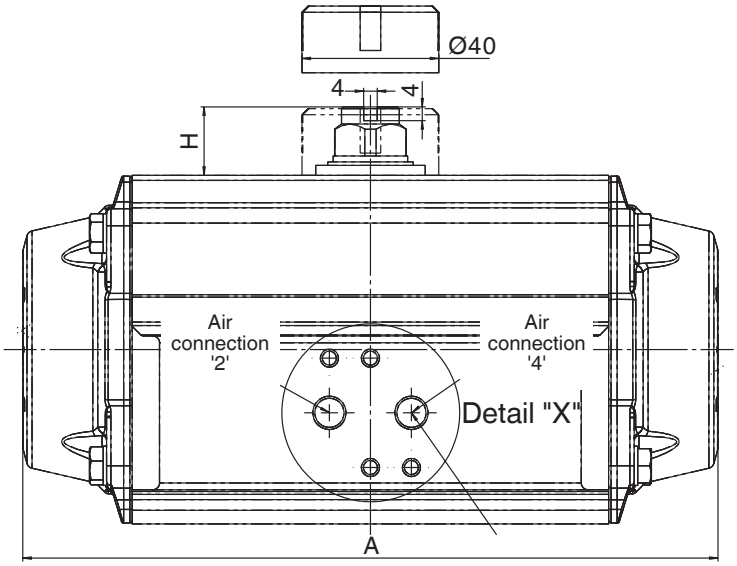

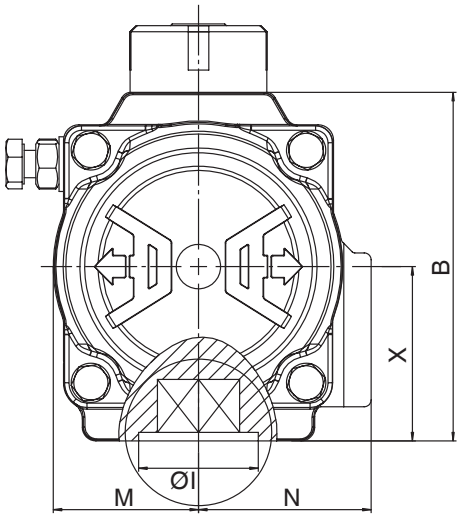

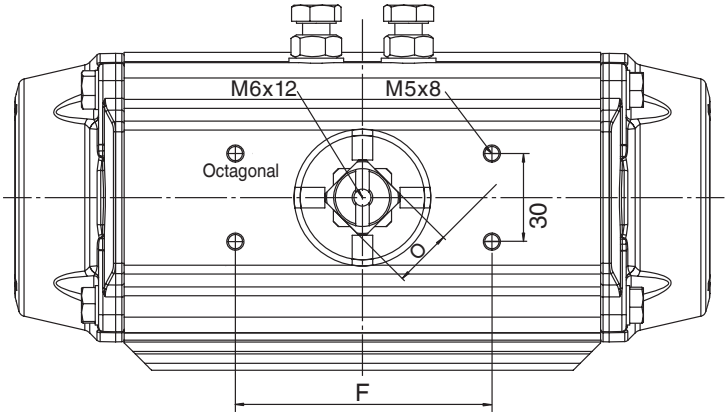

Detail "X"

Typ 0015U - 1200U

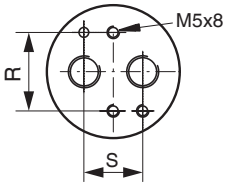

VDI/VDE 3845

Type	0015U	0030U	0060U	0100U	0150U	0220U	0300U	0450U	0600U	0900U	1200U
ISO Flange	F04	F04 F05/07	F05/07	F05/07	F07/10	F07/10	F07/10	F10/12	F10/12	F14	F14
Octagonal	11	14	14	17	17	22	22	27	27	36	36
L	12	16	19	19	25	24	24	29	40	38	38
Air connector	G 1/8	G 1/8	G 1/8	G 1/8	G 1/4	G 1/4	G 1/4	G 1/4	G 1/4	G 1/4	G 1/4
A	136.0	153.5	203.5	241.0	259.0	304.0	333.0	394.5	422.5	474.0	528.0
B	69.0	85.0	102.0	115.0	127.0	145.0	157.0	177.0	196.0	220.5	245.0
F	80	80	80	80	80	80	80	80	80	130	130
H	20	20	20	20	20	30	30	30	30	50	50
Ø I	30	35	35	40	55	55	55	70	70	100	100
M	29.0	36.0	42.5	49.5	55.5	64.0	69.5	80.0	88.0	99.0	110.0
N	43.0	48.5	50.5	56.5	63.0	72.0	77.0	86.0	93.0	101.0	111.5
O	11	11	17	17	17	27	27	27	27	36	36
R	32	32	32	32	32	32	32	32	32	32	32
S	24	24	24	24	24	24	24	24	24	24	24
h	0.5	0.5	0.5	1.5	1.5	1.5	1.5	1.5	1.5	2	2
h1	1.5	1.5	2	1.5	2	2	2	3	3	3	3
L	11	11/16	19	19	19	19	25	32	40	38	38
Weight [kg]											
DR	1.0	1.6	2.7	3.7	5.2	8.0	9.8	14.0	18.0	24.0	34.0
SC	1.1	1.7	3.1	4.3	6.1	9.3	12.0	17.0	22.0	33.0	42.0

9 Dimensions / order data - Type 497 with manual operator [mm]

Hand lever - Aluminium

CAHL version = Latching hand lever with 10° notches

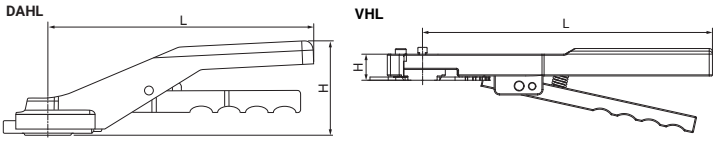

DN	Designation	Top flange	L	H	Weight [kg]	Code
40	CAHLF0509.200	F05	200	70	0,31	CAHL09
50-80	CAHLF0711.200	F07	200	79	0,50	CAHL11
100-125	CAHLF0714.270	F07	270	82	0,60	CAHL14
150	CAHLF0717.315	F07	315	88	0,70	CAHL17

Continuously adjustable hand lever on request

Hand lever - Stainless steel

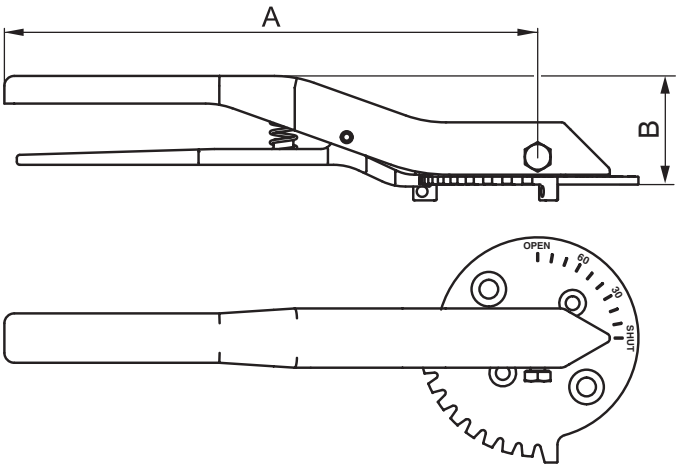

DN	Designation	Top flange	A	B	Weight [kg]	Code
40	SHL.F0509.230	F05	230	46	0,3	SHL09
50-80	SHL.F0711.230	F07	230	46	0,3	SHL11
100-125	SHL.F0714.270	F07	270	51	1,4	SHL14
150	SHL.F0717.325	F07	325	51	2,4	SHL17
200	SHL.F1019.349	F10	349	56	2,6	SHL19
250-300	SHL.F1022.349	F10	349	56	2,6	SHL22

Material: Stainless steel (1.4308 or A2)

Order example	1	DN	2	3	4	5	6	7	8	9			
Code	497	Order data butterfly valve (page 4)								SHL11			

9 Dimensions / order data - Type 497 with manual operator [mm]

Hand wheel

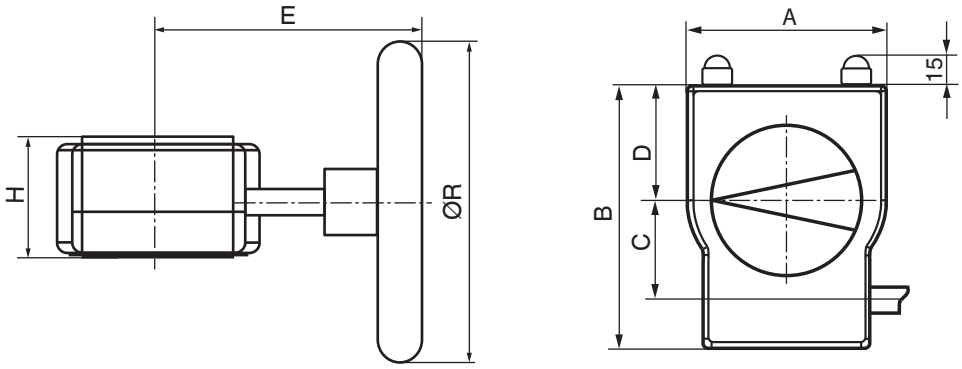

DN	Order designation	A	B	C	D	E	H	øR	n*	[kg]	Code
40	GB23205F05-F07 D9 PS100	80	114	42.5	48	105	53	100	10.00	0.8	GB232
50 - 80	GB23205F05-F07 D11 PS100	80	114	42.5	48	105	53	100	10.00	0.8	GB232
100 - 125	GB23205F05-F07 D14 PS100	80	114	42.5	48	105	53	100	10.00	0.8	GB232
150	GB23206F05-F07 D17 PS160	80	114	42.5	48	155	59	160	10.00	0.9	GB232
200	GB23208F07-F10 D19 PS200	100	131	50.0	56	170	67	200	9.25	1.4	GB232
250 - 300	GB23208F07-F10 D22 PS200	100	131	50.0	56	170	67	200	9.25	1.4	GB232
350 - 400	GB23211F10-F12 D27 SG400	146	174	60.0	79	200	79	400	11.25	2.7	GB232
450 - 500	GB23214F10-F14 D36 SG400	175	209	80.0	83	280	85	400	10.00	4.7	GB232
600	GB880 F12-F16 D46 SG400	200	226	86.0	100	339	93	400	9.5	14.0	GB880

Material: Aluminium, polyurethane coated n*= handwheel turns OPEN/CLOSED

Order example	1	DN	2	3	4	5	6	7	8	9
Code	497	Order data butterfly valve (page 4)								GB232

Technical data - Motorized GEMÜ actuators

Min. / max. ambient temperature

-10 to +60° C

Min. / max. storage temperature

-20 to +60° C

Protection class to EN 60529

IP 65

Torque / Weight

Actuator version 1015	(DN 15)	1.0 kg
Actuator version 2015	(DN 15)	1.2 kg
Actuator version 3035	(DN 35)	2.4 kg
Actuator version 2070	(DN 70)	4.6 kg
Actuator version 4100	(DN 100)	11.0 kg
Actuator version 4200	(DN 200)	11.0 kg

Mounting position

Optional

Special feature

Standard manual override

Directives

EC Machinery Directive 98/37/EC, annex II B

EC EMC directive 89/336/EEC

Travel

Nominal travel	90°
Maximum travel	93°
Setting range limit switch min.	0 - 20°
Setting range limit switch max.	70 - 93°

Power supply

Rated voltage	24 V DC / 24 V AC
Rated frequency (at AC rated voltage)	50/60 Hz
Voltage tolerance	+10% / -15%

Operating time

Actuator version 1015, 2015	approx. 11 sec
Actuator version 3035	approx. 15 sec
Actuator version 2070	approx. 19 sec
Actuator version 4100	approx. 20 sec
Actuator version 4200	approx. 16 sec

Rating

Actuator version 1015, 2015, 3035	60 %
Actuator version 3035	60 %
Actuator version 2070	100 %
Actuator version 4100	100%
Actuator version 4200	100 %

Material

Actuator version	1015	2015 / 3035	2070	4100, 4200
Housing base	PP (30% gr*)	PP (30% gr*)	ABS	Aluminium
Housing cover	PPO (10% gr*)	PP (30% gr*)	ABS	Aluminium
Indicator	PP-R natur	PP-R natur	PP-R natur	PMMA

*gr = glass reinforced

Power and current consumption

Actuator version	24 V DC		24 V AC	
	A0/AE	00/0E/0P	A0/AE	00/0E/0P
	Power consumption [W]			
1015, 2015 (15 Nm)	30	-	40	-
3035 (35 Nm)	30	-	30	-
2070 (70 Nm)	96	63	-	63
4100 (100 Nm)	96	105	-	140
4200 (200 Nm)	96	90	-	110

Correlation tables for motorized GEMÜ actuators

Actuator version / Voltage-Frequency

Actuator version	Voltage-Frequency (code)	
	C1	C4
1015	X	-
2015	-	X
3035	X	X
2070	X	X
4100	X	X
4200	X	X

Actuator version / Nominal size

Actuator version	DN							
	40	50	65	80	100	125	150	200
1015	X	-	-	-	-	-	-	-
2015	X	-	-	-	-	-	-	-
3035	-	X	-	-	-	-	-	-
2070	-	-	X	X	X	-	-	-
4100	-	-	-	-	-	X	-	-
4200	-	-	-	-	-	-	X	X

Actuator version / Functional module

Actuator version	Functional module (code)				
	A0	AE	00	0E	0P
1015	X	X	-	-	-
2015	X	X	-	-	-
3035	X	X	-	-	-
2070	X	X	X	X	X
4100	X	X	X	X	X
4200	X	X	X	X	X

Order data - GEMÜ 498 with motorized GEMÜ actuators

12 Voltage/Frequency	Code
24V DC	C1
24V AC 50/60 Hz	C4

13 Functional module	Code
OPEN / CLOSE control	A0
OPEN/CLOSE control with 2 additional potential-free limit switches	AE
OPEN/CLOSE control, not reversible	00
OPEN/CLOSE control, not reversible with 2 additional potential-free limit switches	0E
OPEN/CLOSE control, not reversible with potentiometer output	0P

14 Actuator version		Code
DN 40	Torque 15 Nm, operating time 11 sec; supply voltage C1	1015
DN 40	Torque 15 Nm, operating time 11 sec; supply voltage C4	2015
DN 50	Torque 35 Nm, operating time 15 sec; supply voltage C1, C4	3035
DN 65-100	Torque 70 Nm, operating time 15 sec; supply voltage C1, C4	2070
DN 125	Torque 100 Nm, operating time 20 sec; supply voltage C1, C4	4100
DN 150-200	Torque 200 Nm, operating time 16 sec; supply voltage C1, C4	4200

Order example	1	2	3	4	5	6	7	8			12	13	14
Code	498	Order data butterfly valve (page 4)									C1	A0	2070

Actuator dimensions [mm]

Actuator version 1015, 2015

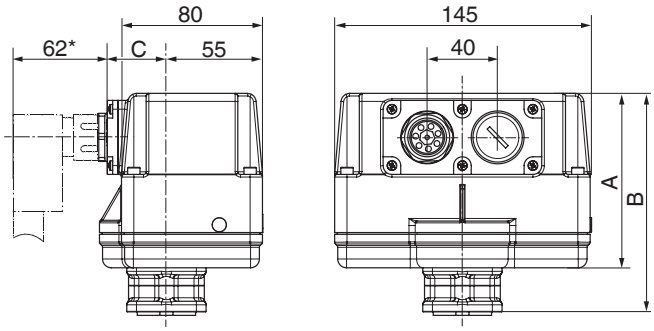

Voltage	A	B	C
24V	68	95	49

Actuator version 3035

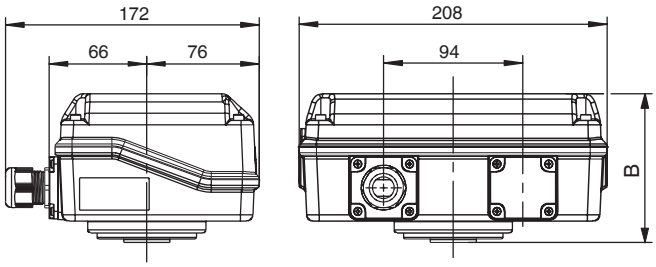

Voltage	B
24V	100.5

Actuator version 2070

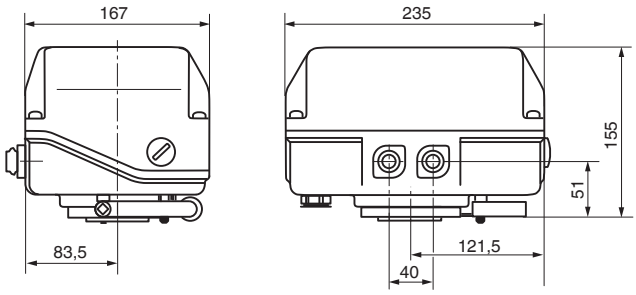

Actuator version 4100, 4200

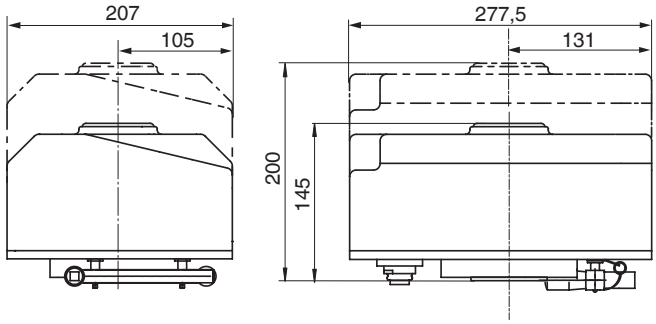

Note: For connection and wiring diagrams for motorized GEMÜ actuators see data sheet

Actuator version code 1015, 2015, 3035 - Data sheet GEMÜ 9428
Actuator version code 2070, 4100, 4200 - Data sheet GEMÜ 9468

Certificate	Standard	Item number
2.1 Certificate of compliance with the order	EN 10204	88039442
2.2 Functionality	EN 10204/EN 12266-2 F20	88439527
2.2 Pressure test	EN 10204, DIN EN 12266 P10, P11, P12	88039443
3.1 Body material	EN 10204	88329322
3.1 Disc/shaft material	EN 10204	88329326
3.1 Pressure test	DIN EN 12266-1 P10, P11, P12	88337306
3.1 Layer thickness measurement		88460229
3.1 Ferrite content measurement		88548641

Instrumentation for quarter turn actuators

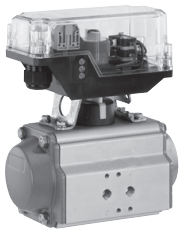

GEMÜ ES2
Electrical position indicator

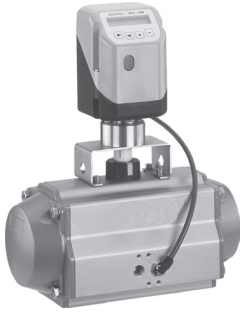

GEMÜ 1436 cPos
Electro-pneumatic positioner and/or process controller

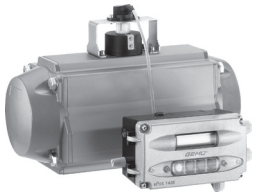

GEMÜ 1435 ePos
Electro-pneumatic positioner

GEMÜ 4221
Combi switchbox with integrated 3/2 way pilot valve

further GEMÜ metal butterfly valves

GEMÜ 4 ...Victoria DN 25 - 600
GEMÜ D4... DN 25 - 1400

GEMÜ 487
GEMÜ D487

GEMÜ 488
GEMÜ D488

GEMÜ 481
GEMÜ D481

For further butterfly valves, accessories and other products, please see our Product Range catalogue and Price List.
Contact GEMÜ.

GEMÜ® VALVES, MEASUREMENT AND CONTROL SYSTEMS

TÜVRheinland® CERT ISO 9001

GEMÜ Gebr. Müller · Apparatebau GmbH & Co. KG · Fritz-Müller-Str. 6-8 · D-74653 Ingelfingen-Criesbach · Tel. +49 (0) 7940/123-0 · Telefax +49 (0) 7940/123-224
info@gemue.de · www.gemu-group.com

All rights including copyright and industrial property rights are expressly reserved.

Should there be any doubts or misunderstandings, the German version of this data sheet is the authoritative document!

Subject to alteration · 04/2022 · 88384437