GEMÜ 1435 ePos

Intelligent electro-pneumatic positioner

Features

- Simple handling and commissioning
- Simple electrical connection by detachable terminals
- Automatically optimises the valve control during initialisation
- No air consumption when idle
- Robust coated aluminium housing

Description

The GEMÜ 1435 ePos digital electro-pneumatic positioner is used to control process valves with single acting or double acting linear or quarter turn actuators, and detects the position of the valve using an external travel sensor. It has a robust aluminium housing with protected operating buttons and an LCD display which allows the product to be individually adapted to the control task. The operating times can be adjusted by integrated throttles. Connection and mounting to NAMUR is also possible. Therefore, the GEMÜ 1435 ePos is an optimal solution for control tasks with high requirements, especially in applications with harsh environmental conditions.

Technical specifications

- Flow rate: 50 Nl/min l 90 Nl/min
- Ambient temperature: -20 to 60 °C
- Measuring range: Max. 30 mm, linear l Max. 50 mm, linear l Max. 75 mm, linear l Max. 90°, radial
- Electrical connection types: M12 cable gland l M12 connector l M16 cable gland
- Supply voltages: 24 V DC
- Conformities: EAC

further information
webcode: GW-1435

Product line

	GEMÜ 1434 µPos	**GEMÜ 1436 eco cPos**	**GEMÜ 1435 ePos**	**GEMÜ 1436 cPos**
Controller type				
Positioner	●	●	●	-
Positioner and process controller	-	-	-	●
Flow rate	15 Nl/min	150 l/min 200 l/min	50 Nl/min 90 Nl/min	150 l/min 200 l/min 300 l/min
Ambient temperature	0 to 60 °C	0 to 60 °C	-20 to 60 °C	0 to 60 °C
Housing material				
Aluminium	-	-	●	-
Housing cover: PP / housing base: Aluminium or stainless steel	●	-	-	-
Housing cover: PSU / housing base PP30	-	●	-	●
Control function of valve actuator				
Double acting	-	-	●	●
Single acting	●	●	●	●
Measuring range				
Max. 30 mm, linear	●	●	●	●
Max. 50 mm, linear	-	●	●	●
Max. 75 mm, linear	-	●	●	●
Max. 90°, radial	-	●	●	●
Display				
No	●	●	-	-
Yes	-	-	●	●
Input option				
No	●	●	-	-
Yes	-	-	●	●

Product description

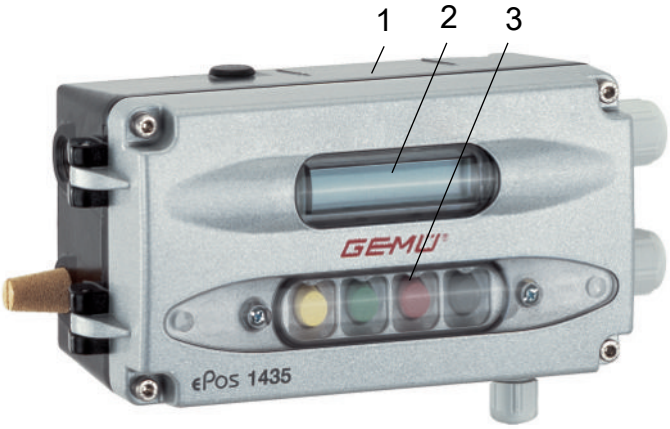

Item	Name	Materials
1	Housing	Aluminium, epoxy coated (from 2018 powder coated)
2	Display with cover	PMMA
3	Operating elements with cover	PMMA

Functions

- Automatic initialisation of actuator and positioner
- Position standardization Min. Position
- Position standardization Max. Position
- Close tight function at Min./Max. position
- Linearization function for set value → Position (linear, 1:25, 1:50, freely programmable)
- Definition of freely programmable characteristic curve via 11 calibration points
- For details see parameter table of operating instructions
- Alphanumeric display, 2 lines with 16 digits each, with background light

GEMÜ CONEXO

The interaction of valve components that are equipped with RFID chips and an associated IT infrastructure actively increase process reliability.

Thanks to serialization, every valve and every relevant valve component such as the body, actuator or diaphragm, and even automation components, can be clearly traced and read using the CONEXO pen RFID reader. The CONEXO app, which can be installed on mobile devices, not only facilitates and improves the "installation qualification" process, but also makes the maintenance process much more transparent and easier to document. The app actively guides the maintenance technician through the maintenance schedule and directly provides him with all the information assigned to the valve, such as test reports, testing documentation and maintenance histories. The CONEXO portal acts as a central element, helping to collect, manage and process all data.

For further information on GEMÜ CONEXO please visit:
www.gemu-group.com/conexo

Ordering

GEMÜ Conexo must be ordered separately with the ordering option "CONEXO" (see order data).

Installing the RFID chip

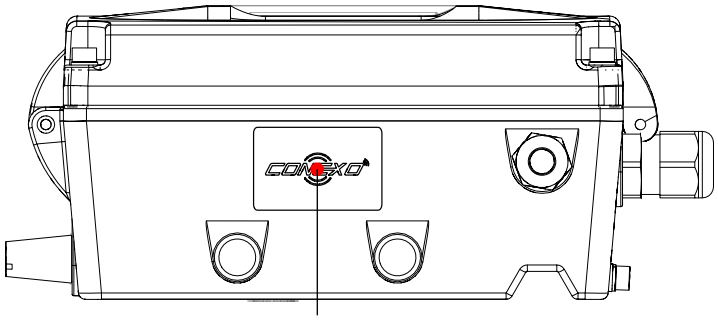

Availability

Option code [1]	Actual value output		Heating element	Interface design	
	0 – 10 V	4 – 20 mA		Cable gland	M12 plug
0	X	-	-	X	-
1	X	-	-	-	X
2	-	X	-	X	-
3	-	X	-	-	X
4	-	X	X	X	-
5	X	-	X	-	X
6	X	-	X	X	-
7	-	X	X	-	X

Flow rate	Action	
	Single acting	Double acting
50 l/min (Code 01)	X	X
90 l/min (Code 02)	X	-

1) **Option**
Code 0: Without
Code 1: Electrical connections M12, 5-pin
Code 2: 4–20 mA, actual value output
Code 3: 4- 20 mA, actual value output, electrical connections M12, 5-pin
Code 4: 4 - 20 mA, actual value output, heating element
Code 5: Electrical connections M12, 5-pin, heating element
Code 6: Heating element
Code 7: 4 - 20 mA, actual value output, electrical connections M12, 5-pin, heating element

Order data

The order data provide an overview of standard configurations.

Please check the availability before ordering. Other configurations available on request.

Note: Pneumatic connecting components (union and compressed air tube) for the connection between the process valve and positioner are included with each positioner.

Note: A valve specific mounting kit is required for assembly. For designing the mounting kit, the valve type, nominal size, control function and actuator size must be stated.

Order codes

1 Type	Code
Electro-pneumatic positioner ePos	1435

2 Fieldbus	Code
Without	000

3 Accessory	Code
Accessory	Z

4 Action	Code
Single acting	1
Double acting	3

5 Explosion-proof class	Code
Without explosion-proof rating	0

6 Option	Code
Without	0
Electrical connections M12, 5-pin	1
4–20 mA, actual value output	2
4- 20 mA, actual value output, electrical connections M12, 5-pin	3
4 - 20 mA, actual value output, heating element	4

6 Continuation of Option	Code
Electrical connections M12, 5-pin, heating element	5
Heating element	6
4 - 20 mA, actual value output, electrical connections M12, 5-pin, heating element	7

7 Flow rate	Code
Electro-pneumatic, 50 l/min	01
Electro-pneumatic, 90 l/min (Booster)	02

8 Special specification	Code
without	
Dead zone presetting 2%	2442
Dead zone presetting 5%	2443
Inversed direction, for quarter turn valves control function NO (2)	6960

9 CONEXO	Code
without	
Integrated RFID chip for electronic identification and traceability	C

Order example

Order option	Code	Description
1 Type	1435	Electro-pneumatic positioner ePos
2 Fieldbus	000	Without
3 Accessory	Z	Accessory
4 Action	1	Single acting
5 Explosion-proof class	0	Without explosion-proof rating
6 Option	0	Without
7 Flow rate	01	Electro-pneumatic, 50 l/min
8 Special specification		without
9 CONEXO		without

Technical data

Medium

Working medium: Compressed air and inert gases

Dust content: Class 3, max. particle size 5 µm, max. particle density 5 mg/m³

Pressure dew point: Class 3, max. pressure dew point -20 °C

Oil content: Class 3, max. oil concentration 1 mg/m³

Quality classes to DIN ISO 8573-1

Note: Filter strainers are installed in the pneumatic connectors of the positioner to protect against rough dirt particles. They can be ordered as spare parts with order number 1435 SFI. Each kit contains 3 filter strainers. These filter strainers are meant as an additional protection and do not replace the requirement to filter all site compressed air.

Temperature

Ambient temperature: 0 to 60 °C (standard, Option code 0, 1, 2, 3)
-20 to 60 °C (with heating element, Option code 4, 5, 6, 7)

≤ 5 °C (heating active)
≥ 15 °C (heating inactive)

Storage temperature: 0 to 60 °C

Product compliance

EMC Directive: 2014/30/EU

Technical standards used:

Interference emission:	DIN EN 61000-6-3
	DIN EN 61326-1 (industry)
Interference resistance:	DIN EN 61000-6-2 (March 2006)

Pressure

Operating pressure: 0 to 6 bar

The applied pressure must not exceed the maximum control pressure of the process valve.

Flow rate: 50 Nl/min (Flow rate code 01)
90 Nl/min (Flow rate code 02)

Air consumption: 0 Nl/min (when idle)

Mechanical data

Installation position: Optional

Protection class: IP 65 acc. to EN 60529

Weight: 1.7 kg

Travel sensor:

	Linear design			Quarter turn design
Detection range:	1 - 29 mm	1.5 - 48.5 mm	2.0 - 73 mm	Angle of rotation 5 - 90°
Operating range:	0 - 30 mm	0 - 50 mm	0 - 75 mm	Angle of rotation 0 - 93°
Resistance R:	3 kΩ	5 kΩ	5 kΩ	3 kΩ
Minimum travel sensor change:	10% (only relevant for initialisation)			
Connection:	Pre-fitted cable (max. 20 m)			
Installation:	external			
Correlation - Travel sensor [1] **spindle/valve position**	Retracted (top) ≙ 100% (valve open)			90° ≙ 100 % (valve open)
	Extended (bottom) ≙ 0 % (valve closed)			0° ≙ 0 % (valve closed)

1) Design code 6960: Inversed mode of action compared with description (Travel sensor signal inversed). For valves with inverted correlation.

Electrical data

Power supply

Supply voltage: 24 V DC (-5/+10%)

Power consumption:
Single acting: ≤ 6.5 W
Double acting / Booster: ≤ 9.8 W
plus in each case: max. 36 W for active digital outputs with max. on-load current
max. 25 W for operation with heating element

Reverse battery protection: Yes

Duty cycle: Continuous duty

Electrical protection class: III

Analogue input

Set value input: 0/4 - 20 mA; 0 - 10 V

Input type: passive

Input load:
0/4–20 mA:
50 Ω + approx. 0.7 V voltage drop due to reverse battery protection
0–10 V:
100 kΩ

Accuracy/linearity: ≤ ±0.3% of full flow

Temperature drift: ≤ ±0.5% of full flow

Resolution: 12 bit

Reverse battery protection: yes

Overload proof: Yes (up to ± 24 V DC)

Analogue output

Note:	The analogue output 4-20 mA must be ordered using the ordering option "Option".
Actual value output:	0 - 10 V 4 - 20 mA (optional)
Output type:	active
On-load current:	0–10 V: Max. 10 mA
Load resistor:	4 – 20 mA: max. 600 Ω (for ordering option "Option" code 2, 3, 4, 7)
Accuracy/linearity:	≤ ±1% of full flow
Temperature drift:	≤ ±0.5% of full flow
Resolution:	12 bit
Short-circuit proof:	Yes
Overload proof:	Yes (up to ± 24 V DC)

Digital output signals

Switching outputs:	Alarm output 1 Alarm output 2 Error message output
Switching voltage:	Supply voltage
Drop voltage:	Max. 2.5 V DC at 0.5 A
Short-circuit proof:	yes
Overload proof:	Yes (up to ± 24 V DC)
Type of contact:	PNP
Pull-Down resistance:	120 kΩ
On-load current:	max. 0.5 A

Travel sensor input

Supply voltage U_{P+}:	Typically 10 V DC
Resistance range of remote potentiometers:	1 to 10 kΩ
Input voltage range:	0 to UP+
Input resistance:	330 kΩ
Accuracy/linearity:	≤ ±0.3% of full flow
Temperature drift:	≤ ±0.3% of full flow
Resolution:	12 bit

Positioner data

Note: Following diagram valid for valves with standard correlation between spindle position and valve position.
(See section "Mechanical data, correlation between travel sensor spindle/valve position")

Control diagram: Default setting / The control characteristic is adjustable.

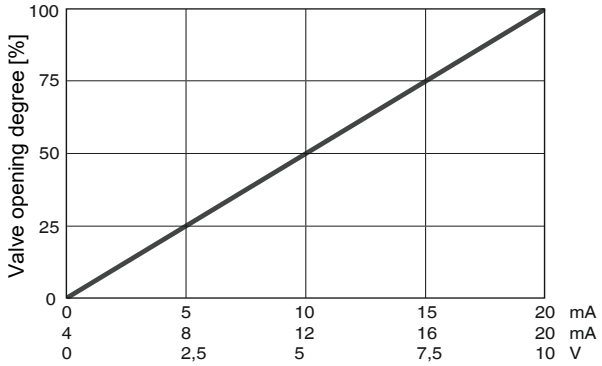

During initialisation, the 1435 ePos positioner automatically detects the control function of the valve and adjusts itself by default so that the valve is closed when the signal is 0/4 mA or 0 V.*
The assignment can be changed subsequently by means of parameters.
* with double acting actuators dependent on pneumatic actuator

Control error: 1 % default setting
≥ 0.1 % (adjustable)
≤ 2.0 % (preset, K-no. 2442)
≤ 5.0 % (preset, K-no. 2443)

Initialisation: automatic (manual possible in ADVANCED system mode)

Close tight function: option

Dimensions

GEMÜ 1435 positioner

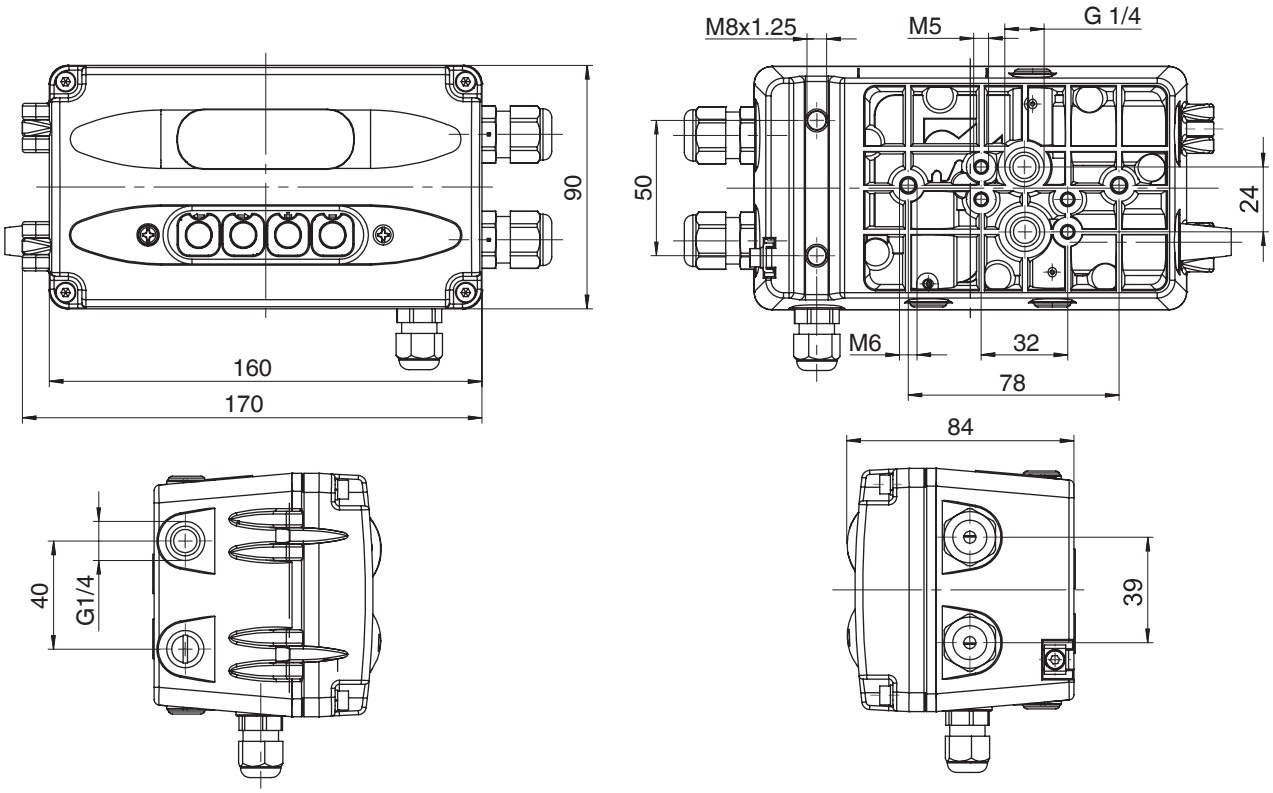

Dimensions in mm

GEMÜ 4232 travel sensor

Housing material aluminium

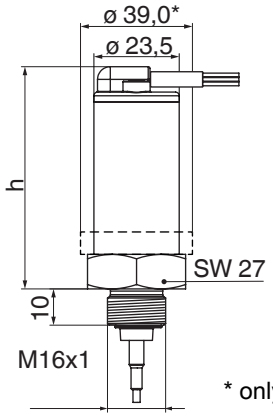

* only ATEX version (special version code X)

Travel length Code	h
030	62.2
050	84.2
075	109.2

Dimensions in mm

Housing material PVDF or PP

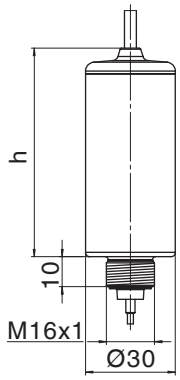

Travel length Code	h
030	69.6
050	91.6
075	116.6

Dimensions in mm

GEMÜ 4231 travel sensor with mounting bracket

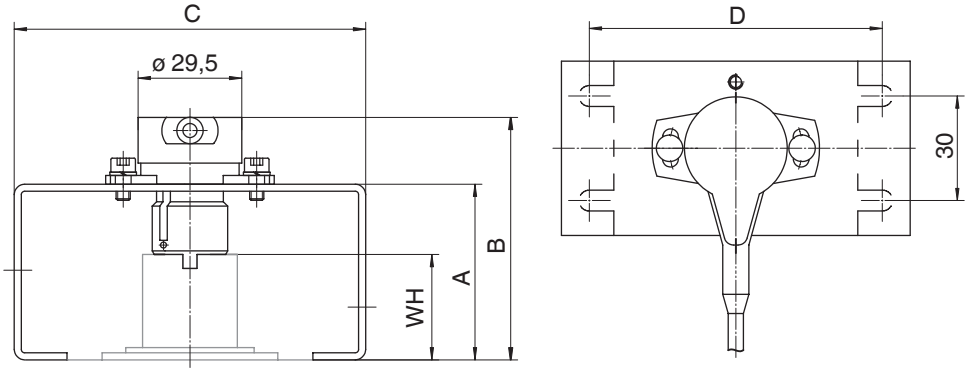

WH Shaft height	D Hole spacing	A	B	C
20	80	40	59	100
30	80	50	69	100
50	130	70	89	150

Dimensions in mm

Mounting bracket for GEMÜ 1435

Mounting bracket for positioner wall mounting, order no. 1435 000 ZMP

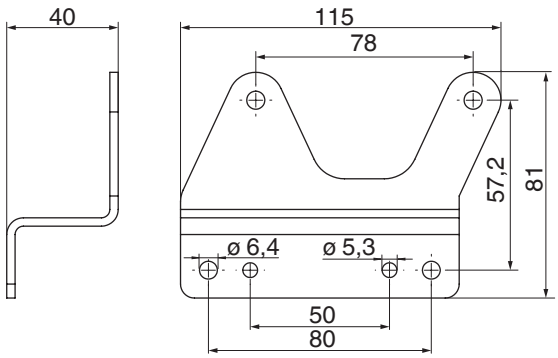

Dimensions in mm

Please order mounting bracket and travel sensor separately.

Electrical connection

Electrical connection with cable gland

Note: Ordering option Option code 0, 2, 4, 6

Position of the connections

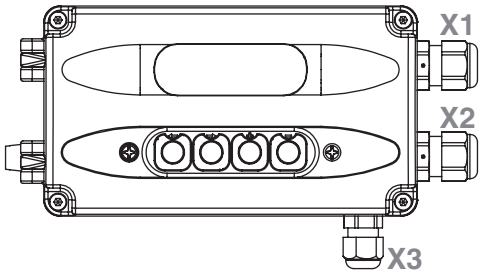

Connection X1/X2:	M16 cable gland
Connection X3:	M12 cable gland
Recommended cable diameter:	X1 / X2: 4 - 10 mm X3: 3.5 – 7 mm
Terminals:	Wago 236
Cross section of wire:	0.5...2.5 mm² / AWG 20…12

Internal wiring:

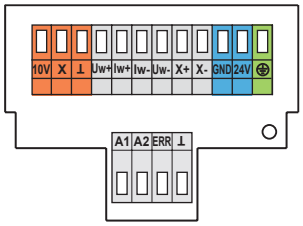

		Key
10 V	green [1]	Connection of external travel sensor
X	brown [1]	
⊥	white [1]	
I_W+		Set value input 0 / 4-20 mA
I_W-		
U_W+		Set value input 0 - 10 V
U_W-		
X+		Actual value output 0 - 10 V 4-20 mA (optional) - internal supply
X-		
GND		Supply voltage 24 V DC
24 V		
⏚		Potential earth
A1		Alarm 1
A2		Alarm 2
ERR		Error message output
⊥		GND out

1) Core colours when using an external travel sensor GEMÜ 4231 or 4232. Connect in the specified order. Other external travel sensors may have different core colours.

Electrical connection with M12

Note: Ordering option Option code 1, 3, 5, 7

Position of the connectors

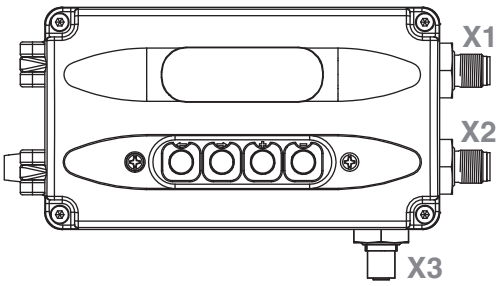

Connection X1

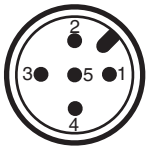

Pin	Ctr	Signal name
1	I	Uv, 24 V DC supply voltage
2	O	Uo, error message output, 24 V DC
3	I	Uv, GND supply voltage
4	O	Uo, alarm output 1, 24 V DC
5	O	Uo, alarm output 2, 24 V DC

Connection X2

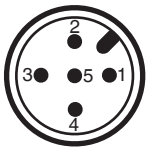

Pin	Ctr	Signal name
1	I	Iw+, set value input 0/4–20 mA *
2	I	Iw-, set value input 0/4–20 mA *
3	O	X+, actual value output 0 - 10 V / 4-20 mA
4	O	X-, actual value output 0 - 10 V / 4-20 mA
5	X	n. c.

* for set value input Uw = 0 - 10 V on-site rewiring is required

Connection X3

Pin	Ctr	Signal name
1	O	UP+, actual value supply 10 V DC
2	I	UPsig, actual value input 0–10 V DC
3	O	UP-, actual value supply GND
4	X	n. c.
5	X	n. c.

Pneumatic connection

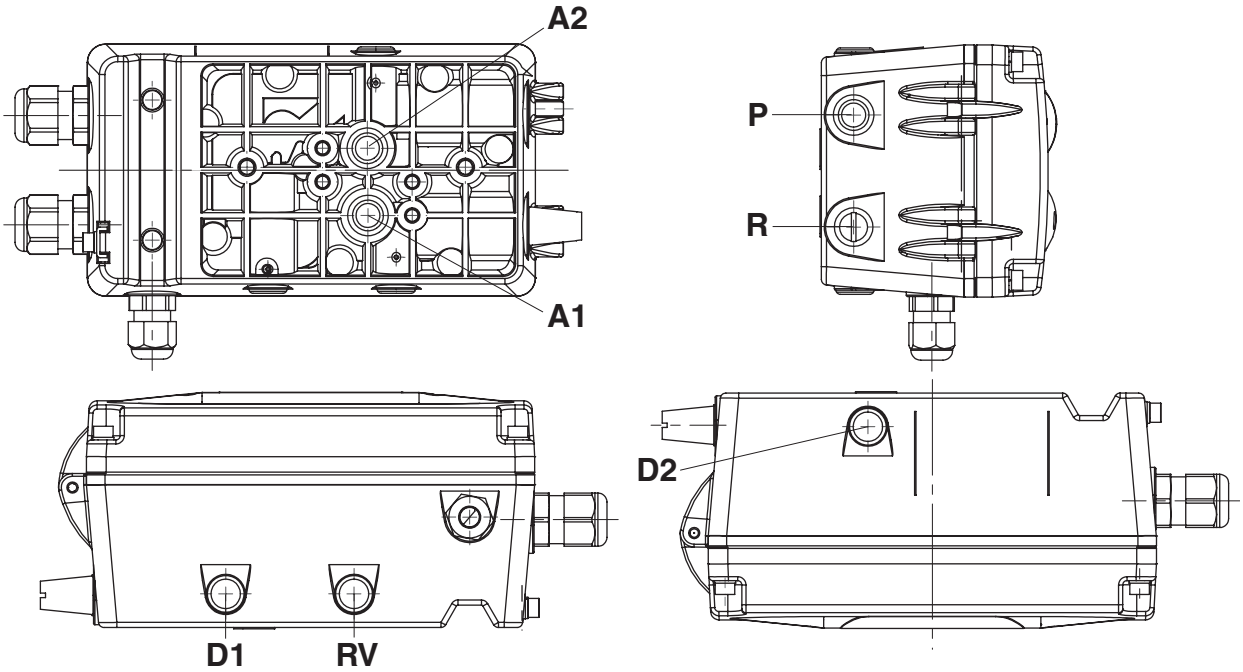

Connection	DIN ISO 1219-1	Designation
P	1	Air supply connection G1/4
R	3	Venting connection G1/4 with silencer
D1	V1	Exhaust air throttle for A1
D2	V2	Exhaust air throttle for A2 (only double acting type (code 3))
RV	V3	Check valve
A1	2	Working connection for process valve
A2	4	Working connection for process valve (only double acting type (code 3))

Fail safe function		
Error	**Working connection A1**	**Working connection A2**
Electrical power supply failure	Single acting: vented Double acting: vented	Single acting: non existent Double acting: pressurized
Pneumatic supply failure	Single acting: vented Double acting: undefined, dependent on the operating conditions of the actuator	Single acting: non existent Double acting: undefined, dependent on the operating conditions of the actuator
This fail safe function is not a substitute for specific plant safety requirements.		

Safety reaction		
Error	**Working connection A1**	**Working connection A2**
Set value < 4.0 mA*	Single acting: vented Double acting: vented	Single acting: non existent Double acting: pressurized
Set value > 20 mA or 10 V	Single acting: vented Double acting: vented	Single acting: non existent Double acting: pressurized
* only when using 4-20 mA set value type (parameter setting)		

Mounting options

Mounting the positioner to linear actuators

Direct mounting

For direct mounting of the positioner on a valve with linear actuator, you need the following components

- GEMÜ 1435 positioner
- Valve specific mounting kit GEMÜ 1445 000Z10… with travel sensor and mounting bracket for mounting the positioner
  (At the time of ordering, specify the valve type with nominal size and control function)

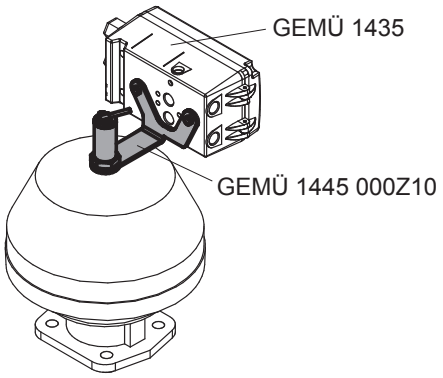

Remote mounting

For remote mounting of the positioner on a valve with linear actuator, you need the following components

- GEMÜ 1435 positioner
- Travel sensor GEMÜ 4232 … 030, 050 or 075

(Travel sensor version dependent on the valve used, cable length dependent on the required distance between the valve and positioner)

- GEMÜ 4232 S01 Z… valve specific mounting kit for mounting the travel sensor
- GEMÜ 1435 000 ZMP mounting bracket (optional) for fixing the positioner

(At the time of ordering, specify the valve type with nominal size and control function and the required distance to the mounting location of the positioner)

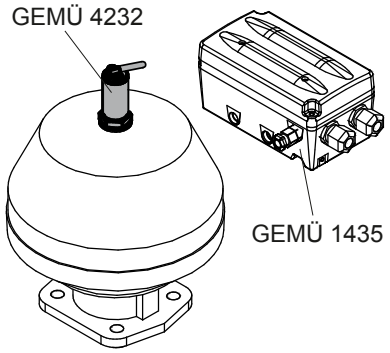

By using remote mounting and additional, deviating components, the valve can also be used in potentially explosive areas (provided that this is approved). In this case, the positioner must be installed outside the potentially explosive area and the connection with the travel sensor established via safety barriers.

The electrical connection and the installation must be carried out in accordance with the specifications in the operating instructions.

Applicable area (zone) dependent on the type of ignition protection of the valve or travel sensor.

The following deviating, supplementary components are to be used for this type of operation:

- Travel sensor in explosion-proof design GEMÜ 4232 ... 030/050/075 ... 0000 ... X
  Travel sensor version dependent on the valve used, cable length dependent on the distance between the critical (potentially explosive) and safe zone

- Connector between travel sensor and positioner, GEMÜ 1219000Z0300SG00M0M125A, order number: 88208779 (only required for version with M12 plug - ordering option Option code 1, 3, 5, 7)
- Safety barrier A two-channel, safety barrier P626, order number: 99014203 *
- Safety barrier B one-channel, safety barrier P630, order number: 99014207 *

* Alternative safety barriers with similar characteristics can be used on-site – technical properties available on request

Mounting the positioner to quarter turn actuators

Direct mounting

For direct mounting of the positioner on a valve with quarter turn actuator, you need the following components

- GEMÜ 1435 positioner
- GEMÜ 1445 000 PTAZ...000 valve specific mounting kit with travel sensor and mounting parts for mounting the positioner (see following order data)

(When ordering, specify valve type with actuator flange size)

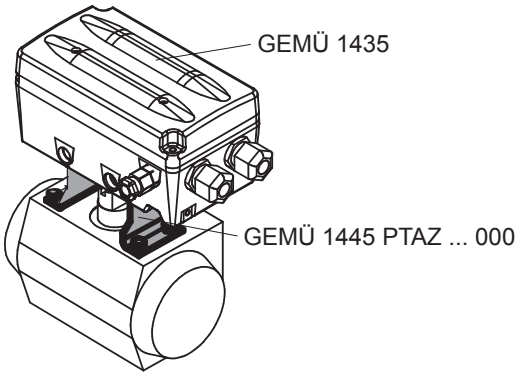

For direct mounting of the positioner (via NAMUR adapter) to the horizontally or vertically aligned control air connectors of a quarter turn actuator, you need the following components

- GEMÜ 1435 positioner
- GEMÜ 1445 PTAZ...V or H valve specific mounting kit with travel sensor and mounting parts for mounting the positioner (see following order data)

(At the time of ordering, specify the valve type with actuator flange size, NAMUR size of the control air connectors and the required distance to the mounting location of the positioner)

GEMÜ 1445 PTAZ ... V..

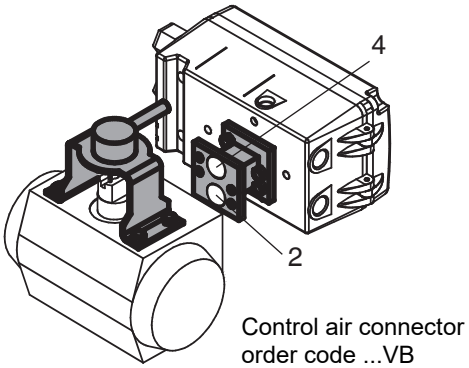

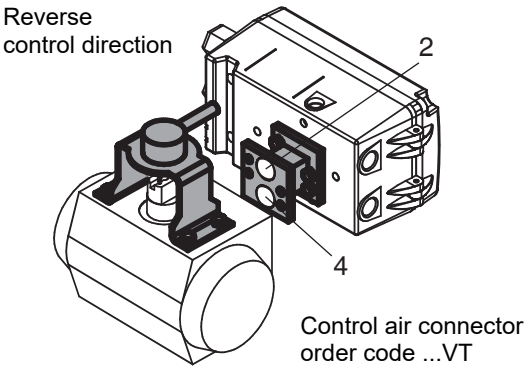

GEMÜ 1445 PTAZ ... H..

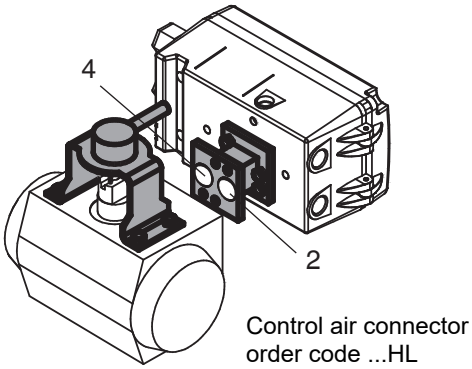

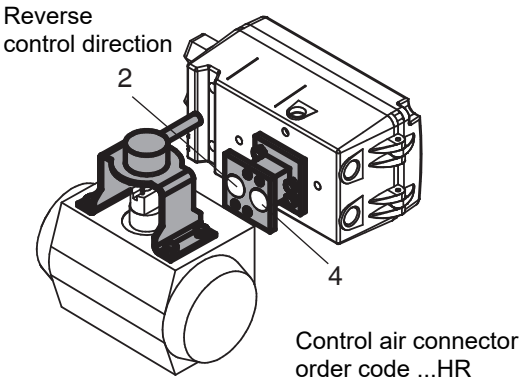

Remote mounting

For remote mounting of the positioner on a valve with quarter turn actuator, you need the following components

- GEMÜ 1435 positioner
- GEMÜ 4231 travel sensor (cable length dependent on the required distance between the valve and positioner)
- 4231PTAZ... ...090 000 valve specific mounting kit for mounting the travel sensor (see following order data)
- GEMÜ 1435 000 ZMP mounting bracket (optional) for fixing the positioner

(At the time of ordering, specify the actuator flange size and the required distance to the mounting location of the positioner)

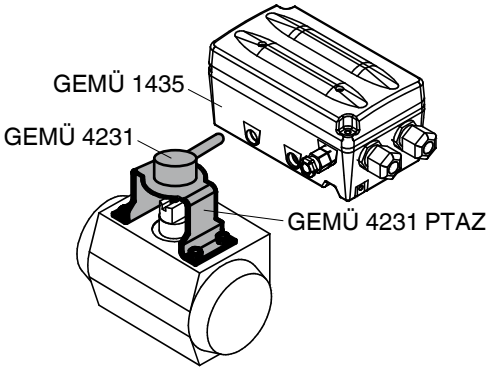

By using remote mounting and additional, deviating components, the valve can also be used in potentially explosive areas (provided that this is approved). In this case, the positioner must be installed outside the potentially explosive area and the connection with the travel sensor established via safety barriers.

The electrical connection and the installation must be carried out in accordance with the specifications in the operating instructions.

Applicable area (zone) dependent on the type of ignition protection of the valve or travel sensor.

The following deviating, supplementary components are to be used for this type of operation:

- GEMÜ 4231 ... 0000 travel sensor
  cable length dependent on the required distance between critical (potentially explosive) and safe zone
- Connector between travel sensor and positioner, GEMÜ 1219000Z0300SG00M0M125A, order number: 88208779 (only required for version with M12 plug - ordering option Option code 1, 3, 5, 7)
- Safety barrier A two-channel, safety barrier P626, order number: 99014203 *
- Safety barrier B one-channel, safety barrier P630, order number: 99014207 *

* Alternative safety barriers with similar characteristics can be used on-site – technical properties available on request

Order data of the valve specific mounting kits for quarter turn actuators

The order data provide an overview of standard configurations.

Please check the availability before ordering. Other configurations available on request.

Order codes

1 Type	Code
Mounting kit for GEMÜ 1435	1445
Mounting kit for GEMÜ 4231	4231

2 Mounting kit	Code
For pneumatic quarter turn actuators	PTAZ

3 Accessory adaption	Code
Hole spacing 50 x 25, shaft height 15, (size AA 0, EN 15714-3)	00
Hole spacing 80 x 30, shaft height 20, (size AA 1, EN 15714-3)	01
Hole spacing 80 x 30, shaft height 30, (size AA 2, EN 15714-3)	02
Hole spacing 130 x 30, shaft height 30, (size AA 3, EN 15714-3)	03
Hole spacing 130 x 30, shaft height 50, (size AA 4, EN 15714-3)	04

4 Angle of rotation	Code
Angle of rotation 90°	090

5 Connection for pilot valves	Code
Mounting kit for GEMÜ 1435 (code 1445) and GEMÜ 4231 (code 4231)	
Control air connector	000

5 Continuation of Connection for pilot valves	Code
Mounting kit for GEMÜ 1435 (code 1445)	
Control air connector G 1/8 and G 1/4, connection pattern horizontal, connector 2 on the left	4HL
Control air connector G 1/8 and G 1/4, connection pattern horizontal, connector 2 on the right	4HR
Control air connector G 1/8 and G 1/4, connection pattern vertical, connector 2 at the bottom	4VB
Control air connector G 1/8 and G 1/4, connection pattern vertical, connector 2 at the top	4VT
Control air connector G 3/8 and G 1/2, connection pattern horizontal, connector 2 on the left	8HL
Control air connector G 3/8 and G 1/2, connection pattern horizontal, connector 2 on the right	8HR
Control air connector G 3/8 and G 1/2, connection pattern vertical, connector 2 at the bottom	8VB
Control air connector G 3/8 and G 1/2, connection pattern vertical, connector 2 at the top	8VT

Order example

Order option	Code	Description
1 Type	1445	Mounting kit for GEMÜ 1435
2 Mounting kit	PTAZ	For pneumatic quarter turn actuators
3 Accessory adaption	00	Hole spacing 50 x 25, shaft height 15, (size AA 0, EN 15714-3)
4 Angle of rotation	090	Angle of rotation 90°
5 Connection for pilot valves	000	Control air connector

Accessory

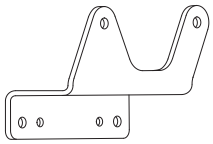

GEMÜ 1435 000 ZMP

Mounting bracket

GEMÜ 1435 000 ZMP... is a mounting bracket for wall mounting (for external mounting) the GEMÜ 1435 ePos intelligent positioner.

Ordering information

Designation	Order number
1435 000 ZMP	88209722

TÜVRheinland® CERT ISO 14001

TÜVRheinland® CERT ISO 9001

Subject to alteration | 11.2020 | 88101193

GEMÜ Gebr. Müller Apparatebau GmbH & Co. KG
Fritz-Müller-Straße 6–8, 74653 Ingelfingen-Criesbach, Germany
Phone +49 (0) 7940 1230 · info@gemue.de
www.gemu-group.com