Product Range

Type 546
Manual and Actuated Ball Valves
DN10 to DN100

+GF+

GEORG FISCHER
PIPING SYSTEMS

List of Abbreviations

ANSI	American National Standard Institute
ASTM	American Society for Testing and Materials
BS	British Standard
DIN	Deutsche Industrie-Normen
ISO	International Standardization Organization
ABS	Acrylnitrile-Butadiene-Styrene
PVC-U	Polyvinyl chloride, unplasticized
PVC-C	Polyvinyl chloride, post-chlorinated
PP-H	Polypropylene, Homopolymeride
PE	Polyethylene
PVDF	Polyvinylidene fluoride
EPDM	Ethylene-Propylene-Rubber
FPM	Fluororubber
PTFE	Polytetrafluoroethylene
d	Pipe outer diameter
DN	Nominal diameter
PN	Nominal pressure at 20 °C, water
kg	Weight in kilograms
®	Registered trademark

The technical data are not binding and not expressly warranted characteristics of the goods. They are subject to change. Our General Conditions of Sale apply.

Dimensions

All dimensions are given in mm.

Table of Contents

Ball valve type 546 in PVC-U
- standard executions 7
- silicone free executions 32
- configurator, order sample 38
- with electric actuator type 107 40
- with electric actuator type 130, 134 50
- configurator, order sample 62
- with pneumatic actuator type 230, 234 65
- configurator, order sample 98

Ball valve type 546 in PVC-C
- standard executions 101
- silicone free executions 113
- configurator 117
- with electric actuator type 107 118
- with electric actuator type 130 124
- configurator, order sample 132
- with pneumatic actuator type 230, 234 135
- configurator, order sample 156

Ball valve type 546 in ABS
- standard executions 158
- configurator 167
- with electric actuator type 107 168
- with electric actuator type 130, 134 174
- configurator, order sample 180
- with pneumatic actuator type 230, 234 182
- configurator, order sample 200

Ball valve type 546 in PP-H
- standard executions 203
- silicone free executions 221
- configurator, order sample 226
- with electric actuator type 107 228
- with electric actuator type 131 234
- configurator, order sample 248
- with pneumatic actuator type 231 250
- configurator, order sample 280

Ball valve type 546 in PVDF
- standard executions 282
- configurator 293
- with electric actuator type 107 294
- with electric actuator type 132 302
- configurator, order sample 310
- with pneumatic actuator type 232 312
- configurator, order sample 336

Valve ends 338

Spare parts and accessories for electric/pneumatic actuators 355

New product:

Ball valve type 546 now in DN65 - DN100

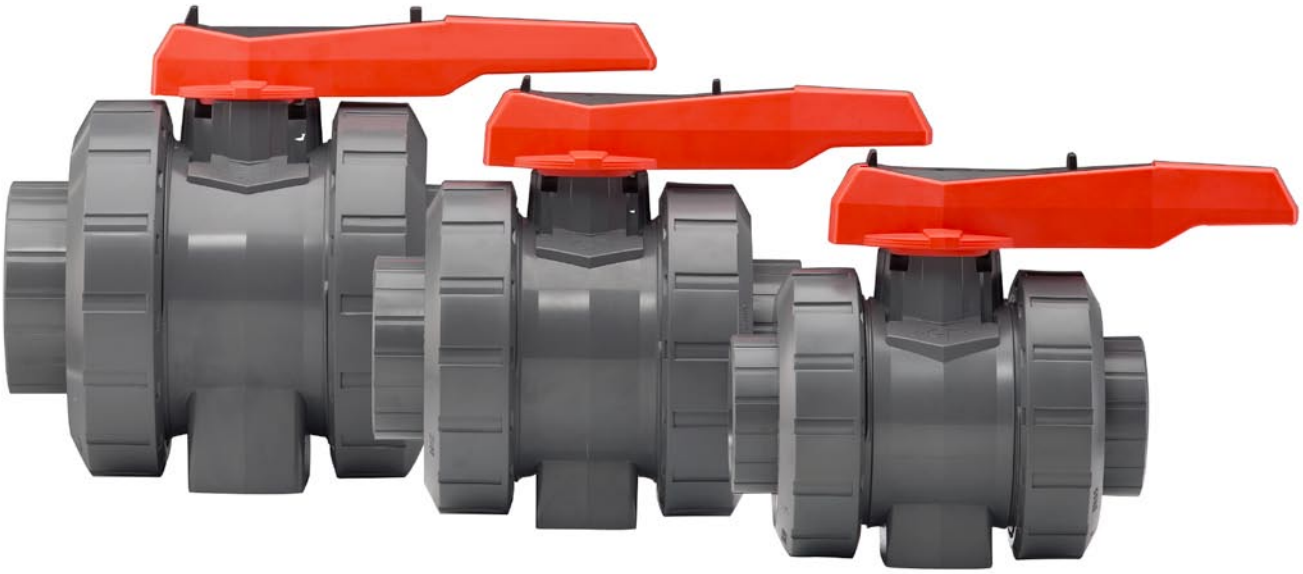

Materials / pressure rating:
- PVC-U (PN16)
- PVC-C (PN16)
- ABS (PN10)
- PP-H (PN10)

Options:
- with or without threaded inserts for easy mounting of the valve available
- electrical positioning feedback with different integrated switches
- lockable handle with ratchet function (5°-pitch)
- valve can be configurated individually

Valve ends:
- fusion and cement sockets ISO/DIN, ASTM, BS, JIS
- fusion and cement spigots ISO/DIN
- threaded socket Rp, Rc, NPT
- backing flanges ISO/DIN, ANSI, BS, JIS
- butt fusion spigots SDR11 and SDR17.6
- PE100 electro fusion spigots resp. butt fusion spigots SDR11 und SDR17.6

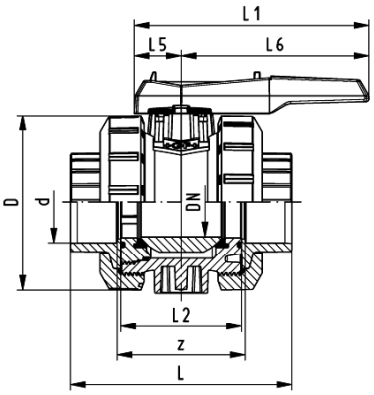

Execution: e.g. fusion/cement socket

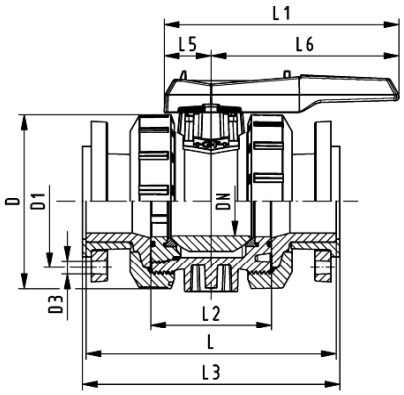

execution: e.g. backing flange PVC-U

Code numbers and dimensions please see ball valve type 546.

New product:

Ball valve type 130 - 134 now in DN65 - DN100

Configuration:
- Ball valve type 546 DN65 to DN100 in PVC-U, PVC-C, ABS, PP-H
- Electrical actuator EA31 in 24V AC/DC or 100-230V 50-60Hz
- Flange connection for the actuator according to ISO 5211

Equipment electric actuator:
- With integrated emergency override
- With optical position indication
- Actuating angle 90°
- Control time 15 sec/90°

Options and accessories:
- Electrical positioning feedback in the multifunctional module

Accessories for actuator EA31:
- Heating element
- Fail-safe return with battery
- Additional mechanical or inductive limit switches
- Monitoring print for cycle time extension, cycle time monitoring, cycle counter, motor current monitoring
- Position signalization 4-20 mA
- Positioner PE25

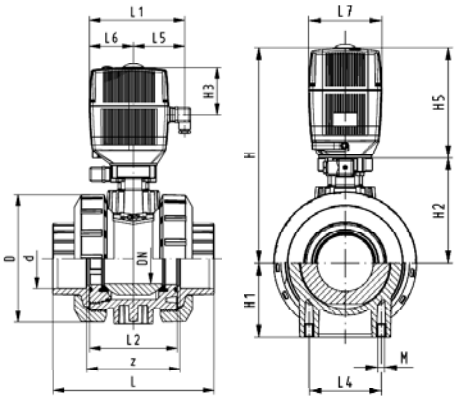

Execution: e.g. with cement socket

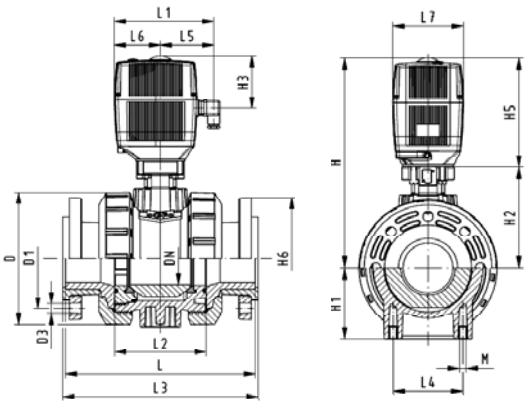

execution: e.g. with backing flange

Code numbers and dimensions please see ball valve type 130 - 134.

New product:

Ball valve type 230 - 234 now in DN65 - DN100

Configuration:

- Ball valve type 546 DN65 to DN100 in PVC-U, PVC-C, ABS, PP-H
- Flange connection for the actuator according to ISO 5211
- pneumatic actuators PA30-45

Working principles for pneumatic actuators:

- fail-safe to close (FC)
- fail-safe to open (FO)
- Double acting (DA)
- Acting angle 90°
- Control time 0.5-2 sec/90°

Options and accessories:

- Electrical positioning feedback in the multifunction module
- Namur mounting console to mount the limit switches on top of the actuator
- Solenoid valves for activation of the actuator

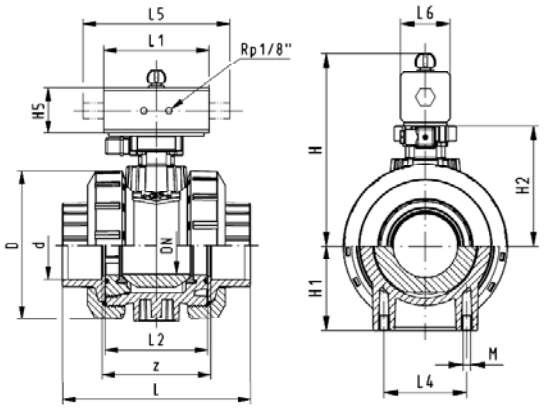

Execution: e.g. cement socket

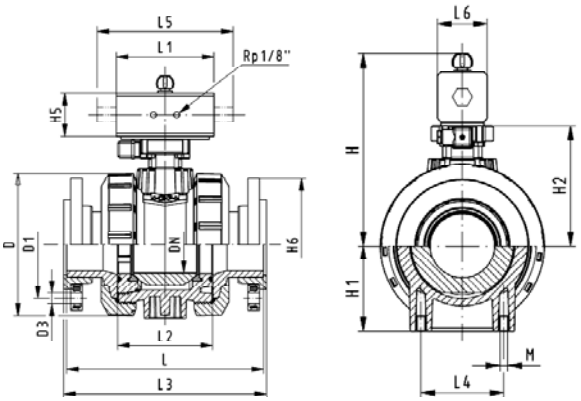

execution: e.g. backing flange

Code numbers and dimensions please see ball valve type 230 - 234

Ball valves

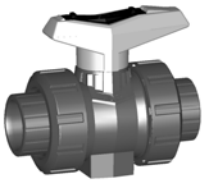

DN10/15 - 50

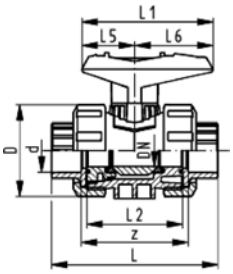

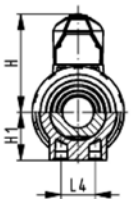

Ball valve type 546 PVC-U
With solvent cement sockets metric

Model:

- Image and drawing DN65-100 please see **New product ball valve DN65-100**
- For easy installation and removal
- z-dimension, valve end and valve nut are **not compatible** with type 346 (DN10/15-50) resp. type 370 (DN65-100)
- Ball seals PTFE
- Without mounting inserts

Option:

- Individual configuration of the valve (see form)
- Multifunctional module with integrated limit switches
- Pneumatic or electric actuators from +GF+

d [mm]	DN [mm]	PN	kv-value (Δp=1 bar) [l/min]	EPDM Code	FPM Code	kg
16	10	16	71	**161 546 001**	**161 546 011**	0.150
20	15	16	185	**161 546 002**	**161 546 012**	0.150
25	20	16	350	**161 546 003**	**161 546 013**	0.230
32	25	16	700	**161 546 004**	**161 546 014**	0.330
40	32	16	1000	**161 546 005**	**161 546 015**	0.600
50	40	16	1600	**161 546 006**	**161 546 016**	0.800
63	50	16	3100	**161 546 007**	**161 546 017**	1.460
New 75	65	16	5000	**161 546 008**	**161 546 018**	4.900
New 90	80	16	7000	**161 546 009**	**161 546 019**	7.400
New 110	100	16	11000	**161 546 010**	**161 546 020**	11.600

d [mm]	D [mm]	H [mm]	H1 [mm]	L [mm]	L1 [mm]	L2 [mm]	L4 [mm]	L5 [mm]	L6 [mm]	z [mm]
16	50	57	27	92	77	56	25	32	45	64
20	50	57	27	95	77	56	25	32	45	64
25	58	67	30	110	97	65	25	39	58	72
32	68	73	36	123	97	71	25	39	58	79
40	84	90	44	146	128	85	45	54	74	94
50	97	97	51	157	128	89	45	54	74	95
63	124	116	64	183	152	101	45	66	87	107
New 75	166	149	85	233	270	136	70	64	206	144
New 90	200	161	105	254	270	141	70	64	206	151
New 110	238	178	123	301	320	164	120	64	256	174

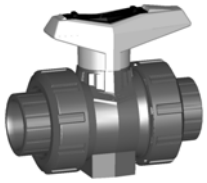

DN10/15 - 50

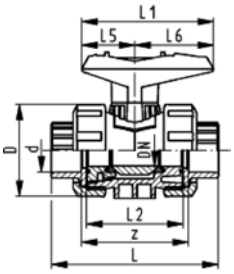

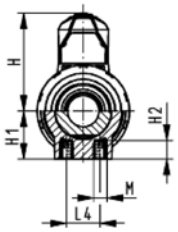

Ball valve type 546 PVC-U
With mounting inserts
With solvent cement sockets metric

Model:

- Image and drawing DN65-100 please see **New product ball valve DN65-100**
- For easy installation and removal
- z-dimension, valve end and valve nut are **not compatible** with type 346 (DN10/15-50) resp. type 370 (DN65-100)
- Ball seals PTFE
- Integrated stainless steel mounting inserts

Option:

- Individual configuration of the valve (see form)
- Multifunctional module with integrated limit switches
- Pneumatic or electric actuators from +GF+

d [mm]	DN [mm]	PN	kv-value (Δp=1 bar) [l/min]	EPDM Code	FPM Code	kg
16	10	16	71	**161 546 061**	**161 546 071**	0.150
20	15	16	185	**161 546 062**	**161 546 072**	0.150
25	20	16	350	**161 546 063**	**161 546 073**	0.230
32	25	16	700	**161 546 064**	**161 546 074**	0.330
40	32	16	1000	**161 546 065**	**161 546 075**	0.600
50	40	16	1600	**161 546 066**	**161 546 076**	0.800
63	50	16	3100	**161 546 067**	**161 546 077**	1.460
New 75	65	16	5000	**161 546 068**	**161 546 078**	4.900
New 90	80	16	7000	**161 546 069**	**161 546 079**	7.400
New 110	100	16	11000	**161 546 070**	**161 546 080**	11.600

d [mm]	D [mm]	H [mm]	H1 [mm]	H2 [mm]	L [mm]	L1 [mm]	L2 [mm]	L4 [mm]	L5 [mm]	L6 [mm]	M	z [mm]
16	50	57	27	12	92	77	56	25	32	45	6	64
20	50	57	27	12	95	77	56	25	32	45	6	64
25	58	67	30	12	110	97	65	25	39	58	6	72
32	68	73	36	12	123	97	71	25	39	58	6	79
40	84	90	44	15	146	128	85	45	54	74	8	94
50	97	97	51	15	157	128	89	45	54	74	8	95
63	124	116	64	15	183	152	101	45	66	87	8	107
New 75	166	149	85	15	233	270	136	70	64	206	8	144
New 90	200	161	105	15	254	270	141	70	64	206	8	151
New 110	238	178	123	22	301	320	164	120	64	256	12	174

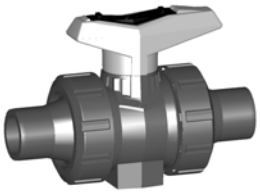

DN10/15 - 50

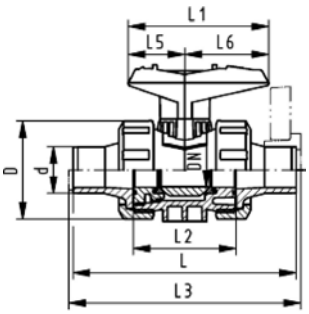

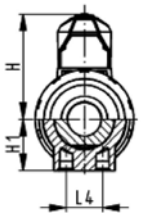

Ball valve type 546 PVC-U
With solvent cement spigots metric

Model:

- Image and drawing DN65-100 please see **New product ball valve DN65-100**
- For easy installation and removal
- z-dimension, valve end and valve nut are **not compatible** with type 346 (DN10/15-50) resp. type 370 (DN65-100)
- Ball seals PTFE
- Without mounting inserts

Option:

- Individual configuration of the valve (see form)
- Multifunctional module with integrated limit switches
- Pneumatic or electric actuators from +GF+

d [mm]	DN [mm]	PN	kv-value (Δp=1 bar) [l/min]	EPDM Code	FPM Code	kg
16	10	16	71	**161 546 041**	**161 546 051**	0.155
20	15	16	185	**161 546 042**	**161 546 052**	0.155
25	20	16	350	**161 546 043**	**161 546 053**	0.240
32	25	16	700	**161 546 044**	**161 546 054**	0.345
40	32	16	1000	**161 546 045**	**161 546 055**	0.615
50	40	16	1600	**161 546 046**	**161 546 056**	0.840
63	50	16	3100	**161 546 047**	**161 546 057**	1.545
New 75	65	16	5000	**161 546 048**	**161 546 058**	5.100
New 90	80	16	7000	**161 546 049**	**161 546 059**	7.500
New 110	100	16	11000	**161 546 050**	**161 546 060**	11.900

d [mm]	D [mm]	H [mm]	H1 [mm]	L [mm]	L1 [mm]	L2 [mm]	L3 [mm]	L4 [mm]	L5 [mm]	L6 [mm]
16	50	57	27	114	77	56		25	32	45
20	50	57	27	124	77	56	130	25	32	45
25	58	67	30	144	97	65	150	25	39	58
32	68	73	36	154	97	71	160	25	39	58
40	84	90	44	174	128	85	180	45	54	74
50	97	97	51	194	128	89	200	45	54	74
63	124	116	64	224	152	101	230	45	66	87
New 75	166	149	85	284	270	136	290	70	64	206
New 90	200	161	105	300	270	141	310	70	64	206
New 110	238	178	123	340	320	164	350	120	64	256

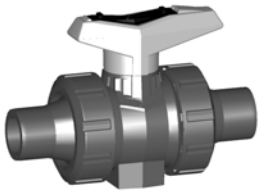

DN10/15 - 50

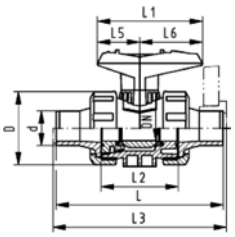

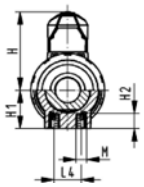

Ball valve type 546 PVC-U
With mounting inserts
With solvent cement spigots metric

Model:

- Image and drawing DN65-100 please see **New product ball valve DN65-100**
- For easy installation and removal
- z-dimension, valve end and valve nut are **not compatible** with type 346 (DN10/15-50) resp. type 370 (DN65-100)
- Ball seals PTFE
- Integrated stainless steel mounting inserts

Option:

- Individual configuration of the valve (see form)
- Multifunctional module with integrated limit switches
- Pneumatic or electric actuators from +GF+

d [mm]	DN [mm]	PN	kv-value (Δp=1 bar) [l/min]	EPDM Code	FPM Code	kg
16	10	16	71	**161 546 721**	**161 546 731**	0.157
20	15	16	185	**161 546 722**	**161 546 732**	0.157
25	20	16	350	**161 546 723**	**161 546 733**	0.242
32	25	16	700	**161 546 724**	**161 546 734**	0.347
40	32	16	1000	**161 546 725**	**161 546 735**	0.620
50	40	16	1600	**161 546 726**	**161 546 736**	0.845
63	50	16	3100	**161 546 727**	**161 546 737**	1.550
New 75	65	16	5000	**161 546 728**	**161 546 738**	5.100
New 90	80	16	7000	**161 546 729**	**161 546 739**	7.500
New 110	100	16	11000	**161 546 730**	**161 546 740**	11.900

d [mm]	D [mm]	H [mm]	H1 [mm]	H2 [mm]	L [mm]	L1 [mm]	L2 [mm]	L3 [mm]	L4 [mm]	L5 [mm]	L6 [mm]	M
16	50	57	27	12	114	77	56	130	25	32	45	M6
20	50	57	27	12	124	77	56	130	25	32	45	M6
25	58	67	30	12	144	97	65	150	25	39	58	M6
32	68	73	36	12	154	97	71	160	25	39	58	M6
40	84	90	44	15	174	128	85	180	45	54	74	M8
50	97	97	51	15	194	128	89	200	45	54	74	M8
63	124	116	64	15	224	152	101	230	45	66	87	M8
New 75	166	149	85	15	284	270	136	290	70	64	206	M8
New 90	200	161	105	15	300	270	141	310	70	64	206	M8
New 110	238	178	123	22	340	320	164	350	120	64	256	M12

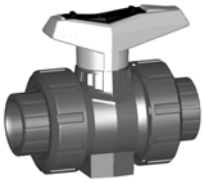

DN10/15 - 50

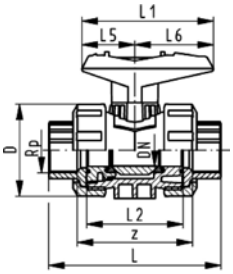

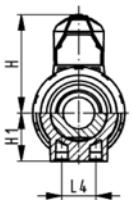

Ball valve type 546 PVC-U
With threaded sockets Rp

Model:

- Image and drawing DN65-100 please see **New product ball valve DN65-100**
- For easy installation and removal
- z-dimension, valve end and valve nut are **not compatible** with type 346 (DN10/15-50) resp. type 370 (DN65-100)
- Ball seals PTFE
- Without mounting inserts

Option:

- Individual configuration of the valve (see form)
- Multifunctional module with integrated limit switches
- Pneumatic or electric actuators from +GF+

Rp [inch]	DN [mm]	PN	kv-value (Δp=1 bar) [l/min]	EPDM Code	FPM Code	kg
⅜	10	10	71	**161 546 021**	**161 546 031**	0.150
½	15	10	185	**161 546 022**	**161 546 032**	0.150
¾	20	10	350	**161 546 023**	**161 546 033**	0.230
1	25	10	700	**161 546 024**	**161 546 034**	0.330
1 ¼	32	10	1000	**161 546 025**	**161 546 035**	0.600
1 ½	40	10	1600	**161 546 026**	**161 546 036**	0.800
2	50	10	3100	**161 546 027**	**161 546 037**	1.460
New 2 ½	65	10	5000	**161 546 028**	**161 546 038**	5.000
New 3	80	10	7000	**161 546 029**	**161 546 039**	7.500
New 4	100	10	11000	**161 546 030**	**161 546 040**	11.700

Rp [inch]	D [mm]	H [mm]	H1 [mm]	L [mm]	L1 [mm]	L2 [mm]	L4 [mm]	L5 [mm]	L6 [mm]	z [mm]
⅜	50	57	27	95	77	56	25	32	45	69
½	50	57	27	100	77	56	25	32	45	67
¾	58	67	30	114	97	65	25	39	58	78
1	68	73	36	127	97	71	25	39	58	85
1 ¼	84	90	44	146	128	85	45	54	74	100
1 ½	97	97	51	152	128	89	45	54	74	106
2	124	116	64	177	152	101	45	66	87	121
New 2 ½	166	149	85	233	270	136	70	64	206	144
New 3	200	161	105	254	270	141	70	64	206	151
New 4	238	178	123	301	320	164	120	64	256	174

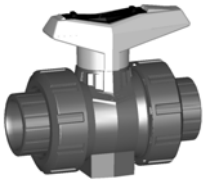

DN10/15 - 50

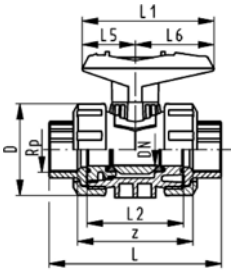

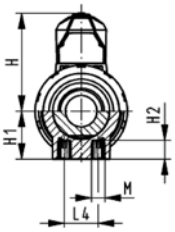

Ball valve type 546 PVC-U
With mounting inserts
With threaded sockets Rp

Model:

- Image and drawing DN65-100 please see **New product ball valve DN65-100**
- For easy installation and removal
- z-dimension, valve end and valve nut are **not compatible** with type 346 (DN10/15-50) resp. type 370 (DN65-100)
- Ball seals PTFE
- Integrated stainless steel mounting inserts

Option:

- Individual configuration of the valve (see form)
- Multifunctional module with integrated limit switches
- Pneumatic or electric actuators from +GF+

Rp [inch]	DN [mm]	PN	kv-value (Δp=1 bar) [l/min]	EPDM Code	FPM Code	kg
⅜	10	10	71	**161 546 741**	**161 546 751**	0.152
½	15	10	185	**161 546 742**	**161 546 752**	0.152
¾	20	10	350	**161 546 743**	**161 546 753**	0.232
1	25	10	700	**161 546 744**	**161 546 754**	0.332
1 ¼	32	10	1000	**161 546 745**	**161 546 755**	0.605
1 ½	40	10	1600	**161 546 746**	**161 546 756**	0.805
2	50	10	3100	**161 546 747**	**161 546 757**	1.465
New 2 ½	65	10	5000	**161 546 748**	**161 546 758**	5.000
New 3	80	10	7000	**161 546 749**	**161 546 759**	7.500
New 4	100	10	11000	**161 546 750**	**161 546 760**	11.700

Rp [inch]	D [mm]	H [mm]	H1 [mm]	H2 [mm]	L [mm]	L1 [mm]	L2 [mm]	L4 [mm]	L5 [mm]	L6 [mm]	M	z [mm]
⅜	50	57	27	12	95	77	56	25	32	45	M6	69
½	50	57	27	12	100	77	56	25	32	45	M6	67
¾	58	67	30	12	114	97	65	25	39	58	M6	78
1	68	73	36	12	127	97	71	25	39	58	M6	85
1 ¼	84	90	44	15	146	128	85	45	54	74	M8	100
1 ½	97	97	51	15	152	128	89	45	54	74	M8	106
2	124	116	64	15	177	152	101	45	66	87	M8	121
New 2 ½	166	149	85	15	233	270	136	70	64	206	M8	144
New 3	200	161	105	15	254	270	141	70	64	206	M8	151
New 4	238	178	123	22	301	320	164	120	64	256	M12	174

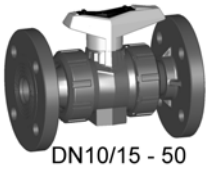

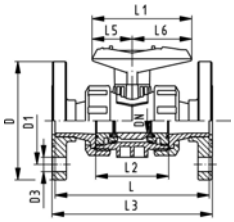

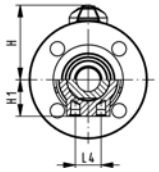

Ball valve type 546 PVC-U
With PVC-U fixed flanges serrated metric

Model:

- Image and drawing DN65-100 please see **New product ball valve DN65-100**
- For easy installation and removal
- z-dimension, valve end and valve nut are **not compatible** with type 346 (DN10/15-50) resp. type 370 (DN65-100)
- Ball seals PTFE
- Without mounting inserts
- Overall length according to EN 558-1
- Connecting dimension: ISO 7005 PN10, EN 1092 PN10, DIN 2501 PN10

Option:

- Individual configuration of the valve (see form)
- Multifunctional module with integrated limit switches
- Pneumatic or electric actuators from +GF+

d [mm]	DN [mm]	PN	kv-value (Δp=1 bar) [l/min]	EPDM Code	FPM Code	kg
20	15	16	185	**800 000 182**	**800 000 192**	0.370
25	20	16	350	**800 000 183**	**800 000 193**	0.510
32	25	16	700	**800 000 184**	**800 000 194**	0.740
40	32	16	1000	**800 000 185**	**800 000 195**	1.230
50	40	16	1600	**800 000 186**	**800 000 196**	1.610
63	50	16	3100	**800 000 187**	**800 000 197**	2.710

d [mm]	D [mm]	D1 [mm]	D3 [mm]	H [mm]	H1 [mm]	L [mm]	L1 [mm]	L2 [mm]	L3 [mm]	L4 [mm]	L5 [mm]	L6 [mm]
20	95	65	14	57	27	124	77	56	130	25	32	45
25	105	75	14	67	30	144	97	65	150	25	39	58
32	115	85	14	73	36	154	97	71	160	25	39	58
40	140	100	18	90	44	174	128	85	180	45	54	74
50	150	110	18	97	51	194	128	89	200	45	54	74
63	165	125	18	116	64	224	152	101	230	45	66	87

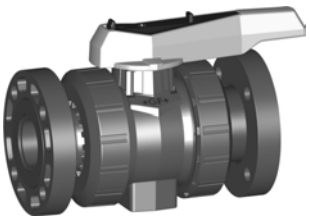

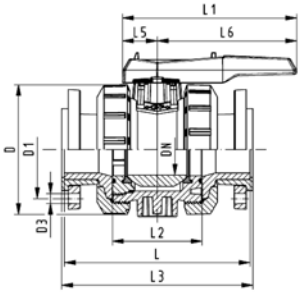

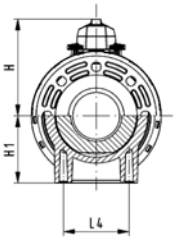

Ball valve type 546 PVC-U
With mounting inserts
With backing flanges PVC-U metric

Model:

- Image and drawing DN65-100 please see **New product ball valve DN65-100**
- For easy installation and removal
- z-dimension, valve end and valve nut are **not compatible** with type 346 (DN10/15-50) resp. type 370 (DN65-100)
- Ball seals PTFE
- Integrated stainless steel mounting inserts
- Overall length according to EN 558-1
- Connecting dimension: ISO 7005 PN10, EN 1092 PN10, DIN 2501 PN10

Option:

- Individual configuration of the valve (see form)
- Multifunctional module with integrated limit switches
- Pneumatic or electric actuators from +GF+

d [mm]	DN [mm]	PN	kv-value (Δp=1 bar) [l/min]	EPDM Code	FPM Code	kg
New 75	65	10	5000	**161 546 108**	**161 546 118**	7.200
New 90	80	10	7000	**161 546 109**	**161 546 119**	10.600
New 110	100	10	11000	**161 546 110**	**161 546 120**	16.500

d [mm]	D [mm]	H [mm]	H1 [mm]	H2 [mm]	L [mm]	L1 [mm]	L2 [mm]	L4 [mm]	L5 [mm]	L6 [mm]	M
New 75	166	149	85	15	284	270	136	70	64	206	M8
New 90	200	161	105	15	300	270	141	70	64	206	M8
New 110	238	178	123	22	340	320	164	120	64	256	M12

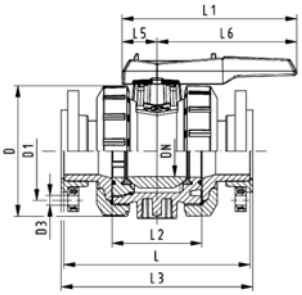

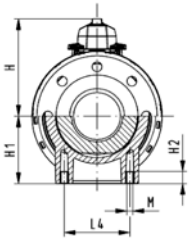

Ball valve type 546 PVC-U
With mounting inserts
With backing flanges PP-st metric

Model:

- Image and drawing DN65-100 please see **New product ball valve DN65-100**
- For easy installation and removal
- z-dimension, valve end and valve nut are **not compatible** with type 346 (DN10/15-50) resp. type 370 (DN65-100)
- Ball seals PTFE
- Integrated stainless steel mounting inserts
- Overall length according to EN 558-1
- Connecting dimensions: ISO 7005, EN 1092, BS 4504, DIN 2501; bolt circle PN 10

Option:

- Individual configuration of the valve (see form)
- Multifunctional module with integrated limit switches
- Pneumatic or electric actuators from +GF+

d [mm]	DN [mm]	PN	kv-value (Δp=1 bar) [l/min]	EPDM Code	FPM Code	kg
New 75	65	16	5000	**161 546 948**	**161 546 958**	9.100
New 90	80	16	7000	**161 546 949**	**161 546 959**	12.400
New 110	100	16	11000	**161 546 950**	**161 546 960**	18.500

d [mm]	D [mm]	H [mm]	H1 [mm]	L [mm]	L1 [mm]	L2 [mm]	L3 [mm]	L4 [mm]	L5 [mm]	L6 [mm]
New 75	166	149	85	284	270	136	290	70	64	206
New 90	200	161	105	300	270	141	310	70	64	206
New 110	238	178	123	340	320	164	350	120	64	256

Ball valves

Ball valve type 546 PVC-U
With solvent cement sockets Inch BS

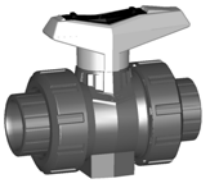

DN10/15 - 50

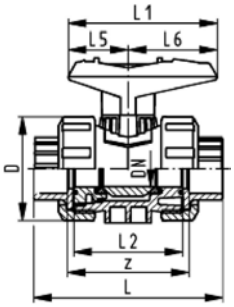

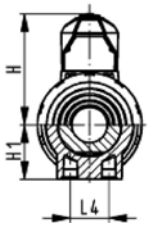

Model:

- Image and drawing DN65-100 please see **New product ball valve DN65-100**
- For easy installation and removal
- z-dimension, valve end and valve nut are **not compatible** with type 346 (DN10/15-50) resp. type 370 (DN65-100)
- Ball seals PTFE
- Without mounting inserts

Option:

- Individual configuration of the valve (see form)
- Multifunctional module with integrated limit switches
- Pneumatic or electric actuators from +GF+

Inch	DN [mm]	PN	kv-value (Δp=1 bar) [l/min]	EPDM Code	FPM Code	kg
⅜	10	16	71	**161 546 201**	**161 546 211**	0.150
½	15	16	185	**161 546 202**	**161 546 212**	0.150
¾	20	16	350	**161 546 203**	**161 546 213**	0.230
1	25	16	700	**161 546 204**	**161 546 214**	0.330
1 ¼	32	16	1000	**161 546 205**	**161 546 215**	0.585
1 ½	40	16	1600	**161 546 206**	**161 546 216**	0.815
2	50	16	3100	**161 546 207**	**161 546 217**	1.490
New	65	16	5000	**161 546 008**	**161 546 018**	4.900
New 3	80	16	7000	**161 546 209**	**161 546 219**	7.400
New 4	100	16	11000	**161 546 210**	**161 546 220**	11.600

Inch	D [mm]	H [mm]	H1 [mm]	L [mm]	L1 [mm]	L2 [mm]	L4 [mm]	L5 [mm]	L6 [mm]	z [mm]
⅜	50	57	27	92	77	56	25	32	45	60
½	50	57	27	95	77	56	25	32	45	60
¾	58	67	30	110	97	65	25	39	58	69
1	68	73	36	123	97	71	25	39	58	75
1 ¼	84	90	44	146	128	85	45	54	74	89
1 ½	97	97	51	157	128	89	45	54	74	97
2	124	116	64	183	152	101	45	66	87	110
New	166	149	85	233	270	136	70	64	206	144
New 3	200	161	105	254	270	141	70	64	206	151
New 4	238	178	123	301	320	164	120	64	256	174

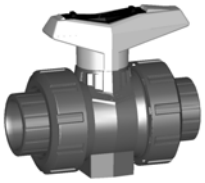

DN10/15 - 50

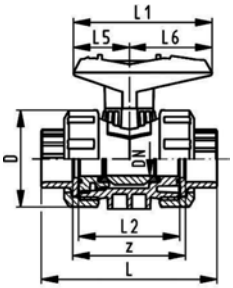

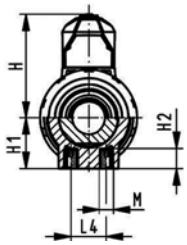

Ball valve type 546 PVC-U
With mounting inserts
With solvent cement sockets inch BS

Model:

- Image and drawing DN65-100 please see **New product ball valve DN65-100**
- For easy installation and removal
- z-dimension, valve end and valve nut are **not compatible** with type 346 (DN10/15-50) resp. type 370 (DN65-100)
- Ball seals PTFE
- Integrated stainless steel mounting inserts

Option:

- Individual configuration of the valve (see form)
- Multifunctional module with integrated limit switches
- Pneumatic or electric actuators from +GF+

Inch	DN [mm]	PN	kv-value (Δp=1 bar) [l/min]	EPDM Code	FPM Code	kg
⅜	10	16	71	**161 546 241**	**161 546 251**	0.150
½	15	16	185	**161 546 242**	**161 546 252**	0.150
¾	20	16	350	**161 546 243**	**161 546 253**	0.230
1	25	16	700	**161 546 244**	**161 546 254**	0.330
1 ¼	32	16	1000	**161 546 245**	**161 546 255**	0.585
1 ½	40	16	1600	**161 546 246**	**161 546 256**	0.815
2	50	16	3100	**161 546 247**	**161 546 257**	1.490
New	65	16	5000	**161 546 068**	**161 546 078**	4.900
3	80	16	7000	**161 546 249**	**161 546 259**	
4	100	16	11000	**161 546 250**	**161 546 260**	

Inch	D [mm]	H [mm]	H1 [mm]	H2 [mm]	L [mm]	L1 [mm]	L2 [mm]	L4 [mm]	L5 [mm]	L6 [mm]	M	z [mm]
⅜	50	57	27	12	92	77	56	25	32	45	6	67
½	50	57	27	12	95	77	56	25	32	45	6	61
¾	58	67	30	12	110	97	65	25	39	58	6	70
1	68	73	36	12	123	97	71	25	39	58	6	76
1 ¼	84	90	44	15	146	128	85	45	54	74	8	90
1 ½	97	97	51	15	157	128	89	45	54	74	8	94
2	124	116	64	15	183	152	101	45	66	87	8	107
New	166	149	85	15	233	270	136	70	64	206	8	144
3	200	161	105	15	254	270	141	70	64	206	8	151
4	238	178	123	22	301	320	164	120	64	256	12	174

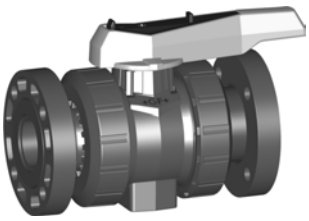

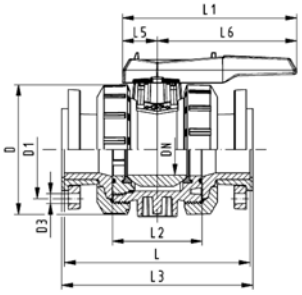

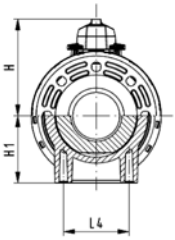

Ball valve type 546 PVC-U
With mounting inserts
With backing flanges PVC-U ASTM/ANSI

Model:

- Image and drawing DN65-100 please see **New product ball valve DN65-100**
- For easy installation and removal
- z-dimension, valve end and valve nut are **not compatible** with type 346 (DN10/15-50) resp. type 370 (DN65-100)
- Ball seals PTFE
- Integrated stainless steel mounting inserts
- Overall length according to EN 558-1
- Connecting dimension: ANSI/ASME B 16.5 class 150 (ASTM D 4024), BS EN 1759

Option:

- Individual configuration of the valve (see form)
- Multifunctional module with integrated limit switches
- Pneumatic or electric actuators from +GF+

Inch	DN [mm]	PN	kv-value (Δp=1 bar) [l/min]	EPDM Code	FPM Code	kg
New 2 ½	65	10	5000	**161 546 168**	**161 546 178**	7.300
New 3	80	10	7000	**161 546 169**	**161 546 179**	10.600
New 4	100	10	11000	**161 546 170**	**161 546 180**	16.400

Inch	D [mm]	D1 [mm]	D3 [mm]	L [mm]	L1 [mm]	L2 [mm]	L3 [mm]	L4 [mm]	L5 [mm]	L6 [mm]	H [mm]	H1 [mm]	M
New 2 ½	166	140	19	284	270	136	290	70	64	206	149	85	8
New 3	200	152	19	300	270	141	310	70	64	206	161	105	8
New 4	238	191	19	340	320	164	350	120	64	256	178	123	12

Ball valves

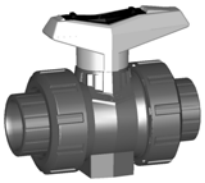

DN10/15 - 50

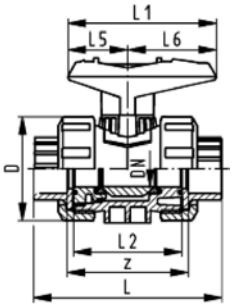

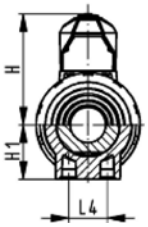

Ball valve type 546 PVC-U
With solvent cement sockets Inch ASTM
Inclusive 2 threaded valve ends NPT

Model:

- Image and drawing DN65-100 please see **New product ball valve DN65-100**
- For easy installation and removal
- z-dimension, valve end and valve nut are **not compatible** with type 346 (DN10/15-50) resp. type 370 (DN65-100)
- Ball seals PTFE
- Without mounting inserts
- Threaded valve ends are only enclosed for DN10/15-50

Option:

- Individual configuration of the valve (see form)
- Multifunctional module with integrated limit switches
- Pneumatic or electric actuators from +GF+

Inch	DN [mm]	PN	kv-value (Δp=1 bar) [l/min]	EPDM Code	FPM Code	kg
⅜	10	16	71	**161 546 301**	**161 546 311**	0.180
½	15	16	185	**161 546 302**	**161 546 312**	0.190
¾	20	16	350	**161 546 303**	**161 546 313**	0.290
1	25	16	700	**161 546 304**	**161 546 314**	0.425
1 ¼	32	16	1000	**161 546 305**	**161 546 315**	0.730
1 ½	40	16	1600	**161 546 306**	**161 546 316**	0.990
2	50	16	3100	**161 546 307**	**161 546 317**	1.775
New 2 ½	65	16	5000	**161 546 308**	**161 546 318**	4.900
New 3	80	16	7000	**161 546 309**	**161 546 319**	7.400
New 4	100	16	11000	**161 546 310**	**161 546 320**	11.500

Inch	D [mm]	H [mm]	H1 [mm]	L [mm]	L1 [mm]	L2 [mm]	L4 [mm]	L5 [mm]	L6 [mm]	z [mm]
⅜	50	57	27	105	77	56	25	32	45	67
½	50	57	27	105	77	56	25	32	45	61
¾	58	67	30	121	97	65	25	39	58	70
1	68	73	36	133	97	71	25	39	58	76
1 ¼	84	90	44	154	128	85	45	54	74	90
1 ½	97	97	51	164	128	89	45	54	74	94
2	124	116	64	183	152	101	45	66	87	107
New 2 ½	166	149	85	233	270	136	70	64	206	144
New 3	200	161	105	254	270	141	70	64	206	151
New 4	238	178	123	301	320	164	120	64	256	174

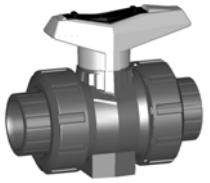

DN10/15 - 50

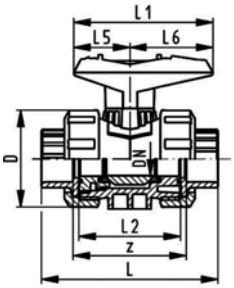

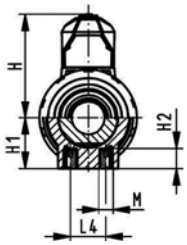

Ball valve type 546 PVC-U
With mounting inserts
With solvent cement sockets Inch ASTM
Inclusive 2 threaded valve ends NPT

Model:

- Image and drawing DN65-100 please see **New product ball valve DN65-100**
- For easy installation and removal
- z-dimension, valve end and valve nut are **not compatible** with type 346 (DN10/15-50) resp. type 370 (DN65-100)
- Ball seals PTFE
- Integrated stainless steel mounting inserts
- Threaded valve ends are only enclosed for DN10/15-50

Option:

- Individual configuration of the valve (see form)
- Multifunctional module with integrated limit switches
- Pneumatic or electric actuators from +GF+

Inch	DN [mm]	PN	kv-value (Δp=1 bar) [l/min]	EPDM Code	FPM Code	kg
⅜	10	16	71	**161 546 341**	**161 546 351**	0.184
½	15	16	185	**161 546 342**	**161 546 352**	0.194
¾	20	16	350	**161 546 343**	**161 546 353**	0.294
1	25	16	700	**161 546 344**	**161 546 354**	0.429
1 ¼	32	16	1000	**161 546 345**	**161 546 355**	0.740
1 ½	40	16	1600	**161 546 346**	**161 546 356**	1.000
2	50	16	3100	**161 546 347**	**161 546 357**	1.785
New 2 ½	65	16	5000	**161 546 348**	**161 546 358**	4.900
New 3	80	16	7000	**161 546 349**	**161 546 359**	7.400
New 4	100	16	11000	**161 546 350**	**161 546 360**	11.500

Inch	D [mm]	H [mm]	H1 [mm]	H2 [mm]	L [mm]	L1 [mm]	L2 [mm]	L4 [mm]	L5 [mm]	L6 [mm]	M	z [mm]
⅜	50	57	27	12	105	77	56	25	32	45	6	67
½	50	57	27	12	105	77	56	25	32	45	6	61
¾	58	67	30	12	121	97	65	25	39	58	6	70
1	68	73	36	12	133	97	71	25	39	58	6	76
1 ¼	84	90	44	15	154	128	85	45	54	74	8	90
1 ½	97	97	51	15	164	128	89	45	54	74	8	94
2	124	116	64	15	183	152	101	45	66	87	8	107
New 2 ½	166	149	85	15	233	270	136	70	64	206	8	144
New 3	200	161	105	15	254	270	141	70	64	206	8	151
New 4	238	178	123	22	301	320	164	120	64	256	12	174

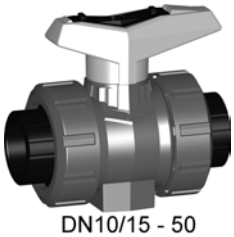

DN10/15 - 50

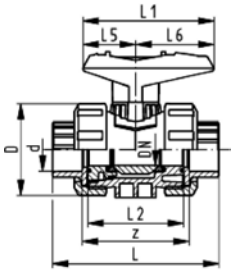

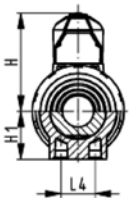

Ball valve type 546 PVC-U
With fusion sockets PE 100 metric

Model:

- Image and drawing DN65-100 please see **New product ball valve DN65-100**
- For easy installation and removal
- z-dimension, valve end and valve nut are **not compatible** with type 346 (DN10/15-50) resp. type 370 (DN65-100)
- Ball seals PTFE
- Without mounting inserts

Option:

- Individual configuration of the valve (see form)
- Multifunctional module with integrated limit switches
- Pneumatic or electric actuators from +GF+

d [mm]	DN [mm]	PN	kv-value (Δp=1 bar) [l/min]	EPDM Code	FPM Code	kg
16	10	16	71	**800 000 101**	**800 000 111**	0.170
20	15	16	185	**800 000 102**	**800 000 112**	0.170
25	20	16	350	**800 000 103**	**800 000 113**	0.240
32	25	16	700	**800 000 104**	**800 000 114**	0.340
40	32	16	1000	**800 000 105**	**800 000 115**	0.610
50	40	16	1600	**800 000 106**	**800 000 116**	0.850
63	50	16	3100	**800 000 107**	**800 000 117**	1.550

d [mm]	D [mm]	H [mm]	H1 [mm]	L [mm]	L1 [mm]	L2 [mm]	L4 [mm]	L5 [mm]	L6 [mm]	z [mm]
16	50	57	27	93	77	56	25	32	45	67
20	50	57	27	95	77	56	25	32	45	66
25	58	67	30	108	97	65	25	39	58	77
32	68	73	36	119	97	71	25	39	58	83
40	84	90	44	137	128	85	45	54	74	99
50	97	97	51	147	128	89	45	54	74	105
63	124	116	64	168	152	101	45	66	87	113

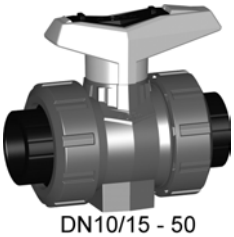

DN10/15 - 50

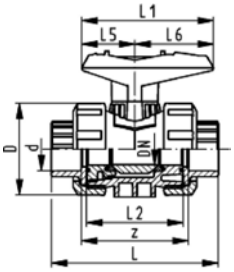

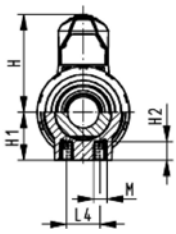

Ball valve type 546 PVC-U
With mounting inserts
With fusion sockets PE 100 metric

Model:

- Image and drawing DN65-100 please see **New product ball valve DN65-100**
- For easy installation and removal
- z-dimension, valve end and valve nut are **not compatible** with type 346 (DN10/15-50) resp. type 370 (DN65-100)
- Ball seals PTFE
- Integrated stainless steel mounting inserts

Option:

- Individual configuration of the valve (see form)
- Multifunctional module with integrated limit switches
- Pneumatic or electric actuators from +GF+

d [mm]	DN [mm]	PN	kv-value (Δp=1 bar) [l/min]	EPDM Code	FPM Code	kg
16	10	16	71	**161 546 761**	**161 546 771**	0.150
20	15	16	185	**161 546 762**	**161 546 772**	0.150
25	20	16	350	**161 546 763**	**161 546 773**	0.220
32	25	16	700	**161 546 764**	**161 546 774**	0.310
40	32	16	1000	**161 546 765**	**161 546 775**	0.550
50	40	16	1600	**161 546 766**	**161 546 776**	0.750
63	50	16	3100	**161 546 767**	**161 546 777**	1.360

d [mm]	D [mm]	H [mm]	H1 [mm]	H2 [mm]	L [mm]	L1 [mm]	L2 [mm]	L4 [mm]	L5 [mm]	L6 [mm]	M	z [mm]
16	50	57	27	12	93	77	56	25	32	45	M6	67
20	50	57	27	12	95	77	56	25	32	45	M6	66
25	58	67	30	12	108	97	65	25	39	58	M6	77
32	68	73	36	12	119	97	71	25	39	58	M6	83
40	84	90	44	15	137	128	85	45	54	74	M8	99
50	97	97	51	15	147	128	89	45	54	74	M8	105
63	124	116	64	15	168	152	101	45	66	87	M8	113

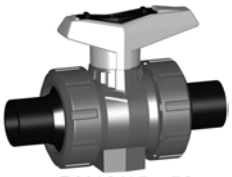

DN10/15 - 50

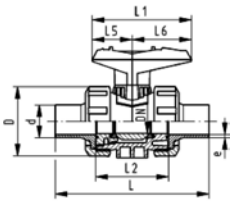

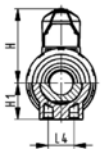

Ball valve type 546 PVC-U
With butt fusion spigots PE 100 SDR11 metric

Model:

- Image and drawing DN65-100 please see **New product ball valve DN65-100**
- For easy installation and removal
- z-dimension, valve end and valve nut are **not compatible** with type 346 (DN10/15-50) resp. type 370 (DN65-100)
- Ball seals PTFE
- Without mounting inserts

Option:

- Individual configuration of the valve (see form)
- Multifunctional module with integrated limit switches
- Pneumatic or electric actuators from +GF+

d [mm]	DN [mm]	PN	kv-value (Δp=1 bar) [l/min]	EPDM Code	FPM Code	kg
20	15	16	185	**800 000 142**	**800 000 152**	0.160
25	20	16	350	**800 000 143**	**800 000 153**	0.240
32	25	16	700	**800 000 144**	**800 000 154**	0.340
40	32	16	1000	**800 000 145**	**800 000 155**	0.600
50	40	16	1600	**800 000 146**	**800 000 156**	0.830
63	50	16	3100	**800 000 147**	**800 000 157**	1.560

d [mm]	D [mm]	H [mm]	H1 [mm]	L [mm]	L1 [mm]	L2 [mm]	L4 [mm]	L5 [mm]	L6 [mm]	e [mm]
20	50	57	27	130	77	56	25	32	45	1,9
25	58	67	30	134	97	65	25	39	58	2,3
32	68	73	36	150	97	71	25	39	58	3
40	84	90	44	171	128	85	45	54	74	3,7
50	97	97	51	191	128	89	45	54	74	4,6
63	124	116	64	220	152	101	45	66	87	5,8

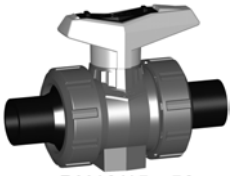

DN10/15 - 50

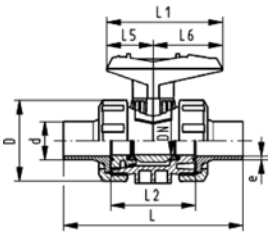

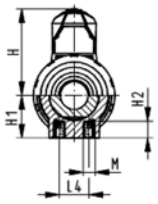

Ball valve type 546 PVC-U
With mounting inserts
With butt fusion spigots PE 100 SDR11 metric

Model:

- Image and drawing DN65-100 please see **New product ball valve DN65-100**
- For easy installation and removal
- z-dimension, valve end and valve nut are **not compatible** with type 346 (DN10/15-50) resp. type 370 (DN65-100)
- Ball seals PTFE
- Integrated stainless steel mounting inserts

Option:

- Individual configuration of the valve (see form)
- Multifunctional module with integrated limit switches
- Pneumatic or electric actuators from +GF+

d [mm]	DN [mm]	PN	kv-value (Δp=1 bar) [l/min]	EPDM Code	FPM Code	kg
20	15	16	185	**161 546 782**	**161 546 792**	0.150
25	20	16	350	**161 546 783**	**161 546 793**	0.220
32	25	16	700	**161 546 784**	**161 546 794**	0.310
40	32	16	1000	**161 546 785**	**161 546 795**	0.550
50	40	16	1600	**161 546 786**	**161 546 796**	0.750
63	50	16	3100	**161 546 787**	**161 546 797**	1.360

d [mm]	D [mm]	H [mm]	H1 [mm]	H2 [mm]	L [mm]	L1 [mm]	L2 [mm]	L4 [mm]	L5 [mm]	L6 [mm]	M	e [mm]
20	50	57	27	12	130	77	56	25	32	45	M6	1,9
25	58	67	30	12	134	97	65	25	39	58	M6	2,3
32	68	73	36	12	150	97	71	25	39	58	M6	3
40	84	90	44	15	171	128	85	45	54	74	M8	3,7
50	97	97	51	15	191	128	89	45	54	74	M8	4,6
63	124	116	64	15	220	152	101	45	66	87	M8	5,8

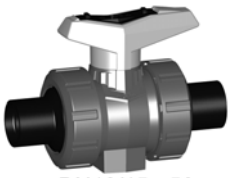

DN10/15 - 50

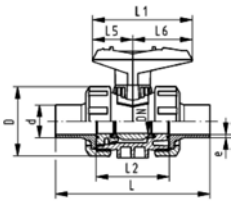

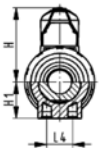

Ball valve type 546 PVC-U
With butt fusion spigots PE 100 SDR17.6 metric

Model:

- Image and drawing DN65-100 please see **New product ball valve DN65-100**
- For easy installation and removal
- z-dimension, valve end and valve nut are **not compatible** with type 346 (DN10/15-50) resp. type 370 (DN65-100)
- Ball seals PTFE
- Without mounting inserts

Option:

- Individual configuration of the valve (see form)
- Multifunctional module with integrated limit switches
- Pneumatic or electric actuators from +GF+

d [mm]	DN [mm]	PN	kv-value (Δp=1 bar) [l/min]	EPDM Code	FPM Code	kg
40	32	10	1000	**800 000 125**	**800 000 135**	0.600
50	40	10	1600	**800 000 126**	**800 000 136**	0.830
63	50	10	3100	**800 000 127**	**800 000 137**	1.560

d [mm]	D [mm]	H [mm]	H1 [mm]	L [mm]	L1 [mm]	L2 [mm]	L4 [mm]	L5 [mm]	L6 [mm]	e [mm]
40	84	90	44	171	128	85	45	54	74	2,3
50	97	97	51	191	128	89	45	54	74	2,9
63	124	116	64	220	152	101	45	66	87	3,6

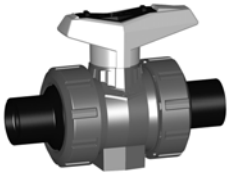

DN10/15 - 50

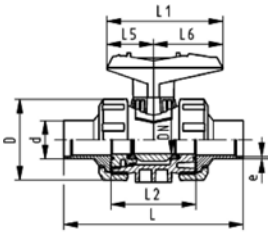

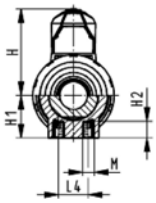

Ball valve type 546 PVC-U
With mounting inserts
With butt fusion spigots PE 100 SDR17.6 metric

Model:

- Image and drawing DN65-100 please see **New product ball valve DN65-100**
- For easy installation and removal
- z-dimension, valve end and valve nut are **not compatible** with type 346 (DN10/15-50) resp. type 370 (DN65-100)
- Ball seals PTFE
- Integrated stainless steel mounting inserts

Option:

- Individual configuration of the valve (see form)
- Multifunctional module with integrated limit switches
- Pneumatic or electric actuators from +GF+

d [mm]	DN [mm]	PN	kv-value (Δp=1 bar) [l/min]	EPDM Code	FPM Code	kg
40	32	10	1000	**161 546 805**	**161 546 815**	0.550
50	40	10	1600	**161 546 806**	**161 546 816**	0.750
63	50	10	3100	**161 546 807**	**161 546 817**	1.360

d [mm]	D [mm]	H [mm]	H1 [mm]	H2 [mm]	L [mm]	L1 [mm]	L2 [mm]	L4 [mm]	L5 [mm]	L6 [mm]	M	e [mm]
40	84	90	44	15	171	128	85	45	54	74	M8	2,3
50	97	97	51	15	191	128	89	45	54	74	M8	2,9
63	124	116	64	15	220	152	101	45	66	87	M8	3,6

DN10/15 - 50

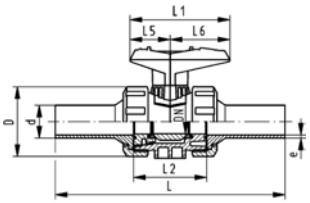

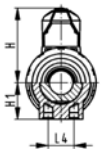

Ball valve type 546 PVC-U
With butt fusion spigots long PE 100 SDR11 metric

Model:

- Image and drawing DN65-100 please see **New product ball valve DN65-100**
- For easy installation and removal
- z-dimension, valve end and valve nut are **not compatible** with type 346 (DN10/15-50) resp. type 370 (DN65-100)
- Ball seals PTFE
- Without mounting inserts

Option:

- Individual configuration of the valve (see form)
- Multifunctional module with integrated limit switches
- Pneumatic or electric actuators from +GF+

d [mm]	DN [mm]	PN	kv-value (Δp=1 bar) [l/min]	EPDM Code	FPM Code	kg
20	15	16	185	**800 000 282**	**800 000 292**	0.170
25	20	16	350	**800 000 283**	**800 000 293**	0.250
32	25	16	700	**800 000 284**	**800 000 294**	0.370
40	32	16	1000	**800 000 285**	**800 000 295**	0.640
50	40	16	1600	**800 000 286**	**800 000 296**	0.910
63	50	16	3100	**800 000 287**	**800 000 297**	1.680
New 75	65	16	5000	**800 000 288**	**800 000 298**	5.000
New 90	80	16	7000	**800 000 289**	**800 000 299**	7.500
New 110	100	16	11000	**800 000 290**	**800 000 300**	11.800

d [mm]	D [mm]	H [mm]	H1 [mm]	L [mm]	L1 [mm]	L2 [mm]	L4 [mm]	L5 [mm]	L6 [mm]	e [mm]
20	50	57	27	193	77	56	25	32	45	2,25
25	58	67	30	216	97	65	25	39	58	2,3
32	68	73	36	223	97	71	25	39	58	3
40	84	90	44	249	128	85	45	54	74	3,7
50	97	97	51	271	128	89	45	54	74	4,6
63	124	116	64	321	152	101	45	66	87	5,8
New 75	166	149	85	386	270	136	70	64	206	6.8
New 90	200	161	105	421	270	141	70	64	206	8.2
New 110	238	178	123	484	320	164	120	64	256	10

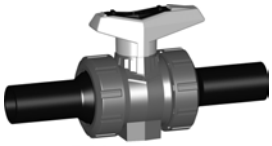

DN10/15 - 50

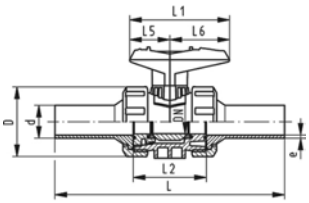

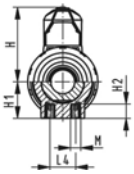

Ball valve type 546 PVC-U
With mounting inserts
With butt fusion spigots long PE 100 SDR11 metric

Model:

- Image and drawing DN65-100 please see **New product ball valve DN65-100**
- For easy installation and removal
- z-dimension, valve end and valve nut are **not compatible** with type 346 (DN10/15-50) resp. type 370 (DN65-100)
- Ball seals PTFE
- Integrated stainless steel mounting inserts

Option:

- Individual configuration of the valve (see form)
- Multifunctional module with integrated limit switches
- Pneumatic or electric actuators from +GF+

d [mm]	DN [mm]	PN	kv-value (Δp=1 bar) [l/min]	EPDM Code	FPM Code	kg
20	15	16	185	**161 546 822**	**161 546 832**	0.150
25	20	16	350	**161 546 823**	**161 546 833**	0.220
32	25	16	700	**161 546 824**	**161 546 834**	0.310
40	32	16	1000	**161 546 825**	**161 546 835**	0.550
50	40	16	1600	**161 546 826**	**161 546 836**	0.750
63	50	16	3100	**161 546 827**	**161 546 837**	1.360

d [mm]	D [mm]	H [mm]	H1 [mm]	H2 [mm]	L [mm]	L1 [mm]	L2 [mm]	L4 [mm]	L5 [mm]	L6 [mm]	M	e [mm]
20	50	57	27	12	193	77	56	25	32	45	M6	2,3
25	58	67	30	12	216	97	65	25	39	58	M6	2,3
32	68	73	36	12	223	97	71	25	39	58	M6	3
40	84	90	44	15	249	128	85	45	54	74	M8	3,7
50	97	97	51	15	271	128	89	45	54	74	M8	4,6
63	124	116	64	15	321	152	101	45	66	87	M8	5,8

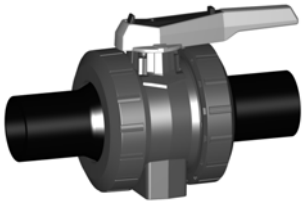

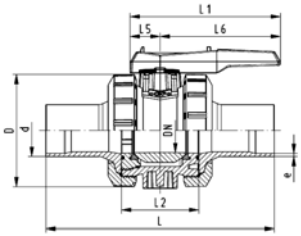

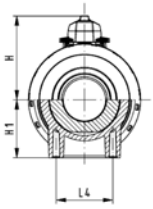

Ball valve type 546 PVC-U
With butt fusion spigots long PE 100 SDR17.6 metric

Model:

- Image and drawing DN65-100 please see **New product ball valve DN65-100**
- For easy installation and removal
- z-dimension, valve end and valve nut are **not compatible** with type 346 (DN10/15-50) resp. type 370 (DN65-100)
- Ball seals PTFE
- Without mounting inserts

Option:

- Individual configuration of the valve (see form)
- Multifunctional module with integrated limit switches
- Pneumatic or electric actuators from +GF+

d [mm]	DN [mm]	PN	kv-value (Δp=1 bar) [l/min]	EPDM Code	FPM Code	kg
New 75	65	16	5000	**800 000 218**	**800 000 228**	5.000
New 90	80	16	7000	**800 000 219**	**800 000 229**	7.400
New 110	100	16	11000	**800 000 220**	**800 000 230**	11.700

d [mm]	D [mm]	H [mm]	H1 [mm]	L [mm]	L1 [mm]	L2 [mm]	L4 [mm]	L5 [mm]	L6 [mm]	e [mm]
New 75	166	149	85	386	270	136	70	64	206	4.3
New 90	200	161	105	421	270	141	70	64	206	5.1
New 110	238	178	123	484	320	164	120	64	256	6.3

DN10/15 - 50

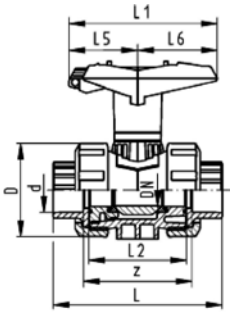

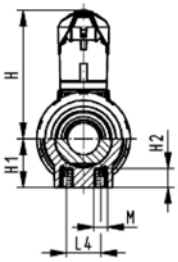

Ball valve type 546 PVC-U
With lockable handle
With solvent cement sockets metric

Model:

- Image and drawing DN65-100 please see **New product ball valve DN65-100**
- For easy installation and removal
- z-dimension, valve end and valve nut are **not compatible** with type 346 (DN10/15-50) resp. type 370 (DN65-100)
- Ball seals PTFE
- Integrated stainless steel mounting inserts
- Lockable hand lever with ratchet settings

Option:

- Individual configuration of the valve (see form)
- Multifunctional module with integrated limit switches
- Pneumatic or electric actuators from +GF+

d [mm]	DN [mm]	PN	kv-value (Δp=1 bar) [l/min]	EPDM Code	FPM Code	kg
16	10	16	71	**161 546 081**	**161 546 091**	0.165
20	15	16	185	**161 546 082**	**161 546 092**	0.165
25	20	16	350	**161 546 083**	**161 546 093**	0.255
32	25	16	700	**161 546 084**	**161 546 094**	0.355
40	32	16	1000	**161 546 085**	**161 546 095**	0.640
50	40	16	1600	**161 546 086**	**161 546 096**	0.840
63	50	16	3100	**161 546 087**	**161 546 097**	1.500
New 75	65	16	5000	**161 546 088**	**161 546 098**	5.200
New 90	80	16	7000	**161 546 089**	**161 546 099**	7.700
New 110	100	16	11000	**161 546 090**	**161 546 100**	12.000

d [mm]	D [mm]	H [mm]	H1 [mm]	H2 [mm]	L [mm]	L1 [mm]	L2 [mm]	L4 [mm]	L5 [mm]	L6 [mm]	M	z [mm]
16	50	79	27	12	92	87	56	25	42	45	M6	64
20	50	79	27	12	95	87	56	25	42	45	M6	64
25	58	88	30	12	110	108	65	25	50	58	M6	72
32	68	94	36	12	123	108	71	25	50	58	M6	79
40	84	113	44	15	146	140	85	45	66	75	M8	94
50	97	119	51	15	157	140	89	45	66	75	M8	95
63	124	141	64	15	183	165	101	45	78	87	M8	107
New 75	166	224	85	15	233	270	136	70	64	206	M8	144
New 90	200	235	105	15	254	270	141	70	64	206	M8	151
New 110	238	245	123	22	301	320	164	120	64	256	M12	174

DN10/15 - 50

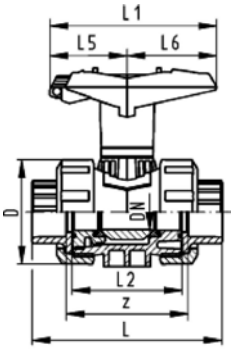

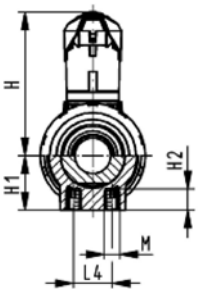

Ball valve type 546 PVC-U
With lockable handle
With solvent cement sockets Inch BS

Model:

- Image and drawing DN65-100 please see **New product ball valve DN65-100**
- For easy installation and removal
- z-dimension, valve end and valve nut are **not compatible** with type 346 (DN10/15-50) resp. type 370 (DN65-100)
- Ball seals PTFE
- Integrated stainless steel mounting inserts
- Lockable hand lever with ratchet settings

Option:

- Individual configuration of the valve (see form)
- Multifunctional module with integrated limit switches
- Pneumatic or electric actuators from +GF+

Inch	DN [mm]	PN	kv-value (Δp=1 bar) [l/min]	EPDM Code	FPM Code	kg
⅜	10	16	71	**161 546 221**	**161 546 231**	0.165
½	15	16	185	**161 546 222**	**161 546 232**	0.165
¾	20	16	350	**161 546 223**	**161 546 233**	0.255
1	25	16	700	**161 546 224**	**161 546 234**	0.355
1 ¼	32	16	1000	**161 546 225**	**161 546 235**	0.625
1 ½	40	16	1600	**161 546 226**	**161 546 236**	0.855
2	50	16	3100	**161 546 227**	**161 546 237**	1.535
New	65	16	5000	**161 546 088**	**161 546 098**	5.200
New 3	80	16	7000	**161 546 229**	**161 546 239**	7.700
New 4	100	16	11000	**161 546 230**	**161 546 240**	12.000

Inch	D [mm]	H [mm]	H1 [mm]	H2 [mm]	L [mm]	L1 [mm]	L2 [mm]	L4 [mm]	L5 [mm]	L6 [mm]	M	z [mm]
⅜	50	79	27	12	92	87	56	25	42	45	M6	60
½	50	79	27	12	95	87	56	25	42	45	M6	60
¾	58	88	30	12	110	108	65	25	50	58	M6	69
1	68	94	36	12	123	108	71	25	50	58	M6	75
1 ¼	84	113	44	15	146	140	85	45	66	75	M8	89
1 ½	97	119	51	15	157	140	89	45	66	75	M8	97
2	124	141	64	15	183	165	101	45	78	87	M8	110
New	166	224	85	15	233	270	136	70	64	206	M8	144
New 3	200	235	105	15	254	270	141	70	64	206	M8	151
New 4	238	245	123	22	301	320	164	120	64	256	M12	174

DN10/15 - 50

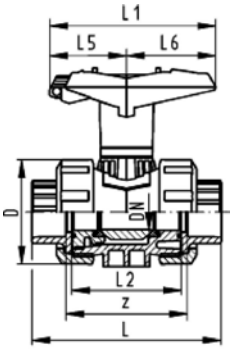

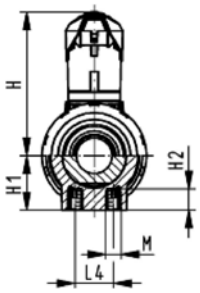

Ball valve type 546 PVC-U
With lockable handle
With solvent cement sockets Inch ASTM
Inclusive 2 threaded valve ends NPT

Model:

- For easy installation and removal
- z-dimension, valve end and valve nut are **not compatible** with type 346 (DN10/15-50) resp. type 370 (DN65-100)
- Ball seals PTFE
- Lockable hand lever with ratchet settings
- Integrated stainless steel mounting inserts
- Threaded valve ends are only enclosed for DN10/15-50

Option:

- Individual configuration of the valve (see form)
- Multifunctional module with integrated limit switches
- Pneumatic or electric actuators from +GF+

Inch	DN [mm]	PN	kv-value (Δp=1 bar) [l/min]	EPDM Code	FPM Code	kg
⅜	10	16	71	**161 546 361**	**161 546 371**	0.195
½	15	16	185	**161 546 362**	**161 546 372**	0.205
¾	20	16	350	**161 546 363**	**161 546 373**	0.315
1	25	16	700	**161 546 364**	**161 546 374**	0.450
1 ¼	32	16	1000	**161 546 365**	**161 546 375**	0.770
1 ½	40	16	1600	**161 546 366**	**161 546 376**	1.030
2	50	16	3100	**161 546 367**	**161 546 377**	1.820
New 2 ½	65	16	5000	**161 546 368**	**161 546 378**	5.300
New 3	80	16	7000	**161 546 369**	**161 546 379**	7.700
New 4	100	16	11000	**161 546 370**	**161 546 380**	11.900

Inch	D [mm]	H [mm]	H1 [mm]	H2 [mm]	L [mm]	L1 [mm]	L2 [mm]	L4 [mm]	L5 [mm]	L6 [mm]	M	z [mm]
⅜	50	79	27	12	105	87	56	25	42	45	M6	67
½	50	79	27	12	105	87	56	25	42	45	M6	61
¾	58	88	30	12	121	108	65	25	50	58	M6	70
1	68	94	36	12	133	108	71	25	50	58	M6	76
1 ¼	84	113	44	15	154	140	85	45	66	74	M8	90
1 ½	97	119	51	15	164	140	89	45	66	74	M8	94
2	124	141	64	15	183	165	101	45	78	87	M8	107
New 2 ½	166	224	85	15	233	270	136	70	64	206	M8	144
New 3	200	235	105	15	254	270	141	70	64	206	M8	151
New 4	238	245	123	22	301	320	164	120	64	256	M12	174

Ball valves

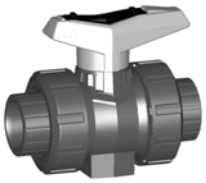

DN10/15 - 50

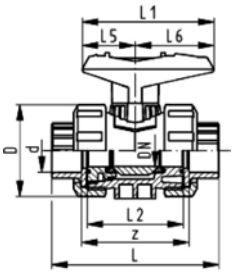

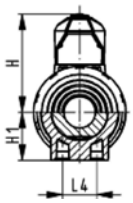

Ball valve type 546 PVC-U SF
With solvent cement sockets metric

Model:

- Image and drawing DN65-100 please see **New product ball valve DN65-100**
- Silicon-free / paint-compatible
- For easy installation and removal
- With PVDF ball seal
- z-dimension, valve end and valve nut are **not compatible** with type 346 (DN10/15-50) resp. type 370 (DN65-100)
- Without mounting inserts

Option:

- Individual configuration of the valve (see form)
- Multifunctional module with integrated limit switches

d [mm]	DN [mm]	PN	kv-value (Δp=1 bar) [l/min]	EPDM Code	FPM Code	kg
16	10	16	71	**161 546 601**	**161 546 611**	0.150
20	15	16	185	**161 546 602**	**161 546 612**	0.150
25	20	16	350	**161 546 603**	**161 546 613**	0.230
32	25	16	700	**161 546 604**	**161 546 614**	0.330
40	32	16	1000	**161 546 605**	**161 546 615**	0.600
50	40	16	1600	**161 546 606**	**161 546 616**	0.800
63	50	16	3100	**161 546 607**	**161 546 617**	1.460
75	65	16	5000	**161 546 608**	**161 546 618**	4.900
90	80	16	7000	**161 546 609**	**161 546 619**	7.400
110	100	16	11000	**161 546 610**	**161 546 620**	11.600

d [mm]	D [mm]	H [mm]	H1 [mm]	L [mm]	L1 [mm]	L2 [mm]	L4 [mm]	L5 [mm]	L6 [mm]	z [mm]
16	50	57	27	92	77	56	25	32	45	64
20	50	57	27	95	77	56	25	32	45	64
25	58	67	30	110	97	65	25	39	58	72
32	68	73	36	123	97	71	25	39	58	79
40	84	90	44	146	128	85	45	54	74	94
50	97	97	51	157	128	89	45	54	74	95
63	124	116	64	183	152	101	45	66	87	107
75	166	149	85	233	270	136	70	64	206	144
90	200	161	105	254	270	141	70	64	206	151
110	238	178	123	301	320	164	120	64	256	174

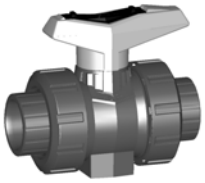

DN10/15 - 50

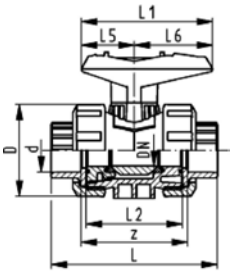

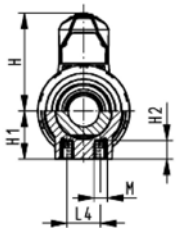

Ball valve type 546 PVC-U SF
With mounting inserts
With solvent cement sockets metric

Model:

- Image and drawing DN65-100 please see **New product ball valve DN65-100**
- Silicon-free / paint-compatible
- For easy installation and removal
- z-dimension, valve end and valve nut are **not compatible** with type 346 (DN10/15-50) resp. type 370 (DN65-100)
- With PVDF ball seal
- Integrated stainless steel mounting inserts

Option:

- Individual configuration of the valve (see form)
- Multifunctional module with integrated limit switches

d [mm]	DN [mm]	PN	kv-value (Δp=1 bar) [l/min]	EPDM Code	FPM Code	kg
16	10	16	71	**800 000 601**	**800 000 611**	0.150
20	15	16	185	**800 000 602**	**800 000 612**	0.150
25	20	16	350	**800 000 603**	**800 000 613**	0.230
32	25	16	700	**800 000 604**	**800 000 614**	0.330
40	32	16	1000	**800 000 605**	**800 000 615**	0.600
50	40	16	1600	**800 000 606**	**800 000 616**	0.800
63	50	16	3100	**800 000 607**	**800 000 617**	1.460
New 75	65	16	5000	**800 000 608**	**800 000 618**	4.900
New 90	80	16	7000	**800 000 609**	**800 000 619**	7.400
New 110	100	16	11000	**800 000 610**	**800 000 620**	11.600

d [mm]	D [mm]	H [mm]	H1 [mm]	H2 [mm]	L [mm]	L1 [mm]	L2 [mm]	L4 [mm]	L5 [mm]	L6 [mm]	M	z [mm]
16	50	57	27	12	92	77	56	25	32	45	M6	64
20	50	57	27	12	95	77	56	25	32	45	M6	64
25	58	67	30	12	110	97	65	25	39	58	M6	72
32	68	73	36	12	123	97	71	25	39	58	M6	79
40	84	90	44	15	146	128	85	45	54	74	M8	94
50	97	97	51	15	157	128	89	45	54	74	M8	95
63	124	116	64	15	183	152	101	45	66	87	M8	107
New 75	166	149	85	15	233	270	136	70	64	206	M8	144
New 90	200	161	105	15	254	270	141	70	64	206	M8	151
New 110	238	178	123	22	301	320	164	120	64	256	M12	174

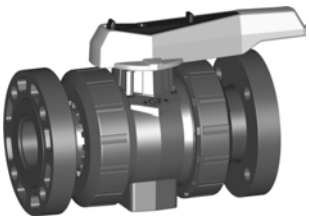

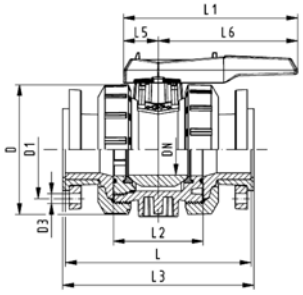

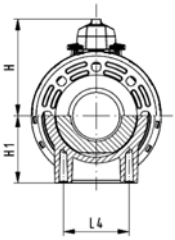

Ball valve type 546 PVC-U SF
With mounting inserts
With backing flanges PVC-U metric

Model:

- Image and drawing DN65-100 please see **New product ball valve DN65-100**
- Silicon-free / paint-compatible
- For easy installation and removal
- z-dimension, valve end and valve nut are **not compatible** with type 346 (DN10/15-50) resp. type 370 (DN65-100)
- With PVDF ball seal
- Integrated stainless steel mounting inserts
- Overall length according to EN 558-1
- Connecting dimension: ISO 7005 PN10, EN 1092 PN10, DIN 2501 PN10

Option:

- Individual configuration of the valve (see form)
- Multifunctional module with integrated limit switches

d [mm]	DN [mm]	PN	kv-value (Δp=1 bar) [l/min]	EPDM Code	FPM Code	kg
New 75	65	10	5000	**161 546 128**	**161 546 138**	7.200
New 90	80	10	7000	**161 546 129**	**161 546 139**	10.600
New 110	100	10	11000	**161 546 130**	**161 546 140**	16.500

d [mm]	D [mm]	D1 [mm]	D3 [mm]	L [mm]	L1 [mm]	L2 [mm]	L3 [mm]	L4 [mm]	L5 [mm]	L6 [mm]	H [mm]	H1 [mm]	M
New 75	166	145	18	284	270	136	290	70	64	206	149	85	8
New 90	200	160	18	300	270	141	310	70	64	206	161	105	8
New 110	238	180	18	340	320	164	350	120	64	256	178	123	12

Ball valves

Ball valve type 546 PVC-U SF
With solvent cement sockets Inch ASTM

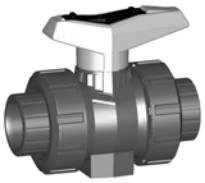

DN10/15 - 50

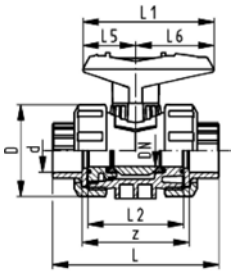

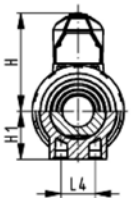

Model:

- Image and drawing DN65-100 please see **New product ball valve DN65-100**
- Silicon-free / paint-compatible
- For easy installation and removal
- z-dimension, valve end and valve nut are **not compatible** with type 346 (DN10/15-50) resp. type 370 (DN65-100)
- Ball seals: Inch ASTM in PTFE
- Without mounting inserts

Option:

- Individual configuration of the valve (see form)
- Multifunctional module with integrated limit switches

Inch	DN [mm]	PN	kv-value (Δp=1 bar) [l/min]	EPDM Code	FPM Code	kg
⅜	10	16	71	**161 546 681**	**161 546 691**	0.155
½	15	16	185	**161 546 682**	**161 546 692**	0.155
¾	20	16	350	**161 546 683**	**161 546 693**	0.240
1	25	16	700	**161 546 684**	**161 546 694**	0.340
1 ¼	32	16	1000	**161 546 685**	**161 546 695**	0.605
1 ½	40	16	1600	**161 546 686**	**161 546 696**	0.805
2	50	16	3100	**161 546 687**	**161 546 697**	1.460
New 2 ½	65	16	5000	**161 546 688**	**161 546 698**	4.900
New 3	80	16	7000	**161 546 689**	**161 546 699**	7.400
New 4	100	16	11000	**161 546 690**	**161 546 700**	11.500

Inch	D [mm]	H [mm]	H1 [mm]	L [mm]	L1 [mm]	L2 [mm]	L4 [mm]	L5 [mm]	L6 [mm]	z [mm]
⅜	50	57	27	105	77	56	25	32	45	67
½	50	57	27	105	77	56	25	32	45	61
¾	58	67	30	121	97	65	25	39	58	70
1	68	73	36	133	97	71	25	39	58	76
1 ¼	84	90	44	154	128	85	45	54	74	90
1 ½	97	97	51	164	128	89	45	54	74	94
2	124	116	64	183	152	101	45	66	87	107
New 2 ½	166	149	85	233	270	136	70	64	206	144
New 3	200	161	105	254	270	141	70	64	206	151
New 4	238	178	123	301	320	164	120	64	256	174

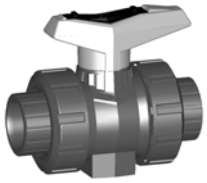

DN10/15 - 50

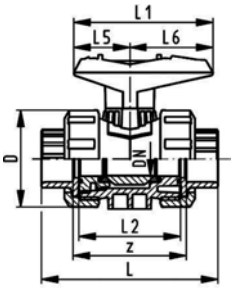

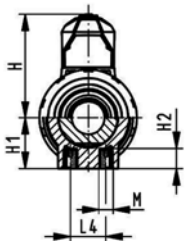

Ball valve type 546 PVC-U SF
With mounting inserts
With solvent cement sockets Inch ASTM

Model:

- Image and drawing DN65-100 please see **New product ball valve DN65-100**
- Silicon-free / paint-compatible
- For easy installation and removal
- z-dimension, valve end and valve nut are **not compatible** with type 346 (DN10/15-50) resp. type 370 (DN65-100)
- Ball seals: Inch ASTM in PTFE
- Integrated stainless steel mounting inserts

Option:

- Individual configuration of the valve (see form)
- Multifunctional module with integrated limit switches

Inch	DN [mm]	PN	kv-value (Δp=1 bar) [l/min]	EPDM Code	FPM Code	kg
⅜	10	16	71	**161 546 841**	**161 546 851**	0.159
½	15	16	185	**161 546 842**	**161 546 852**	0.159
¾	20	16	350	**161 546 843**	**161 546 853**	0.244
1	25	16	700	**161 546 844**	**161 546 854**	0.344
1 ¼	32	16	1000	**161 546 845**	**161 546 855**	0.615
1 ½	40	16	1600	**161 546 846**	**161 546 856**	0.815
2	50	16	3100	**161 546 847**	**161 546 857**	1.470
New 2 ½	65	16	5000	**161 546 848**	**161 546 858**	4.900
New 3	80	16	7000	**161 546 849**	**161 546 859**	7.400
New 4	100	16	11000	**161 546 850**	**161 546 860**	11.500

Inch	D [mm]	H [mm]	H1 [mm]	H2 [mm]	L [mm]	L1 [mm]	L2 [mm]	L4 [mm]	L5 [mm]	L6 [mm]	M	z [mm]
⅜	50	57	27	12	105	77	56	25	32	45	M6	67
½	50	57	27	12	105	77	56	25	32	45	M6	61
¾	58	67	30	12	121	97	65	25	39	58	M6	70
1	68	73	36	12	133	97	71	25	39	58	M6	76
1 ¼	84	90	44	16	154	128	85	45	54	74	M8	90
1 ½	97	97	51	16	164	128	89	45	54	74	M8	94
2	124	116	64	16	183	152	101	45	66	87	M8	107
New 2 ½	166	149	85	15	233	270	136	70	64	206	M8	144
New 3	200	161	105	15	254	270	141	70	64	206	M8	151
New 4	238	178	123	22	301	320	164	120	64	256	M12	174

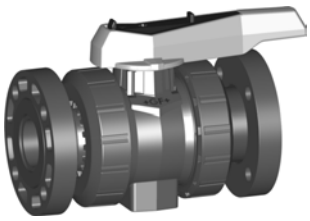

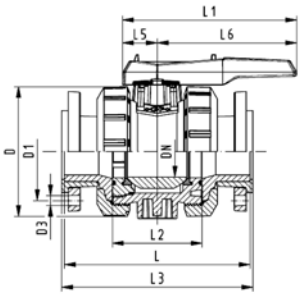

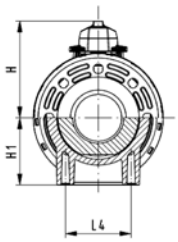

Ball valve type 546 PVC-U SF
With mounting inserts
With backing flanges PVC-U ASTM/ANSI

Model:

- Image and drawing DN65-100 please see **New product ball valve DN65-100**
- Silicon-free / paint-compatible
- For easy installation and removal
- z-dimension, valve end and valve nut are **not compatible** with type 346 (DN10/15-50) resp. type 370 (DN65-100)
- Ball seals: Inch ASTM in PTFE
- Integrated stainless steel mounting inserts
- Overall length according to EN 558-1
- Connecting dimension: ANSI/ASME B 16.5 class 150 (ASTM D 4024), BS EN 1759

Option:

- Individual configuration of the valve (see form)
- Multifunctional module with integrated limit switches

Inch	DN [mm]	PN	kv-value (Δp=1 bar) [l/min]	EPDM Code	FPM Code	kg
New 2 ½	65	10	5000	**161 546 188**	**161 546 198**	7.300
New 3	80	10	7000	**161 546 189**	**161 546 199**	10.600
New 4	100	10	11000	**161 546 190**	**161 546 200**	16.400

Inch	D [mm]	D1 [mm]	D3 [mm]	L [mm]	L1 [mm]	L2 [mm]	L3 [mm]	L4 [mm]	L5 [mm]	L6 [mm]	H [mm]	H1 [mm]	M
New 2 ½	166	140	19	284	270	136	290	70	64	206	149	85	8
New 3	200	152	19	300	270	141	310	70	64	206	161	105	8
New 4	238	191	19	340	320	164	350	120	64	256	178	123	12

Copiable
Configurator GF Ball Valve Type 546 PVC-U

You will find a large selection of different versions in our range of products. New system elements also provide you with new opportunities for use. In order for us to supply exactly the ball valve you need for your application, we put together a selection menu for you (the maximum working pressure of the whole valve is determined by the maximum permissible nominal pressure
of the connecting part).

Ball valve
A01 Ball valve 546

Material
B01 PVC-U

Dimension

C05	d 16	DN 10	3/8"
C06	d 20	DN 15	1/2"
C07	d 25	DN 20	3/4"
C08	d 32	DN 25	1"
C09	d 40	DN 32	1 1/4"
C10	d 50	DN 40	1 1/2"
C11	d 63	DN 50	2"
C12	d 75	DN 65	2 1/2"
C13	d 90	DN 80	3"
C14	d 110	DN 100	4"
C15	d 160	DN 150	6"

Version
D01 standard, PTFE ball seal
D02 oilfree, PTFE ball seal (only with specific connecting parts)
D03 silicon-free, PTFE ball seal for inch ASTM (only with specific connecting parts)
D04 silicon-free, PVDF ball seal for metric (only with specific connecting parts)

Seals
E01 EPDM seals
E02 FPM seals
E03 FFPM (KALREZ©) seals

Threaded inserts
F01 without threaded inserts
F02 with threaded inserts

Connecting parts
G01 PVC-U Cement socket metric
G03 PVC-U Cement socket inch ASTM
G04 PVC-U Cement socket inch BS
G05 PVC-U Cement spigot metric
G06 PVC-U Threaded socket Rp
G07 PVC-U Threaded socket Rp reinforced (DN10-50)
G09 PVC-U Threaded socket NPT
G30 PP-H Fusion socket metric
G32 PP-H Socket fusion spigot metric
G33 PP-H Threaded socket Rp
G34 PP-H Threaded socket NPT reinforced
G35 PP-H Butt fusion spigot SDR 11 metric IR-PLUS
G36 PP-H Butt fusion spigot SDR 17.6 metric (limited dimension range)
G37 PP-H Butt fusion spigot long SDR11 metric
G40 PE-100 Fusion socket metric
G41 PE-100 Butt fusion spigot SDR11 metric
G42 PE-100 Butt fusion spigot SDR17.6 metric (limited dimension range)
G43 PE-100 Butt fusion spigot long SDR11 metric
G44 PE-100 Butt fusion spigot long SDR17.6 metric (DN65-100)
G60 Fixed flange PVC-U serrated metric
G61 Fixed flange PVC-U flat metric
G70 Backing flange PVC-U metric
G71 Backing flange PVC-U inch ANSI
G72 Backing flange PP-steel metric
G73 Backing flange PP-steel ANSI
G78 Backing flange PVC-U JIS (DN65-100)
G80 PVC-U Valve end blank

Multi-functional module
I01 No multi-functional module
I02 Empty module
I03 Module with 2 limit switches Ag, Ni
I04 Module with 2 limit switches Au
I05 Module with 2 inductive switches Namur
I06 Module with 2 inductive switches PNP
I07 Module with 2 inductive switches NPN

Handle
K01 Standard handle red
K02 Standard handle black
K11 Multi-functional handle red

Mounting plate
L01 without mounting plate
L02 with mounting plate

A01	B01	C	D	E	F	G	G	I	K	L
						left	right			

Find the fitting solution with the Configurator

Example:

Type 546 PVC-U, dimension DN 32,
PTFE ball seal, EPDM seals,
with threaded inserts and mounting plate,
connecting part left: PVC-U cement socket metric,
right: PE-100 butt fusion spigot lang SDR11 metric

That's all it takes to configure your ball valve.

Ball valve

A01	Ball valve 546

Material

B01	PVC-U

Dimension

C05	d 16	DN 10	3/8"
C06	d 20	DN 15	1/2"
C07	d 25	DN 20	3/4"
C08	d 32	DN 25	1"
C09	d 40	DN 32	1 1/4"
C10	d 50	DN 40	1 1/2"
C11	d 63	DN 50	2"
C12	d 75	DN 65	2 1/2"
C13	d 90	DN 80	3"
C14	d 110	DN 100	4"
C15	d 160	DN 150	6"

Version

D01	standard, PTFE ball seal
D02	oilfree, PTFE ball seal (only with specific connecting parts)
D03	silicon-free, PTFE ball seal for inch ASTM (only with specific connecting parts)
D04	silicon-free, PVDF ball seal for metric (only with specific connecting parts)

Seals

E01	EPDM seals
E02	FPM seals
E03	FFPM (KALREZ®) seals

Threaded inserts

F01	without threaded inserts
F02	with threaded inserts

Connecting parts

G01	PVC-U Cement socket metric
G03	PVC-U Cement socket inch ASTM
G04	PVC-U Cement socket inch BS
G05	PVC-U Cement spigot metric
G06	PVC-U Threaded socket Rp
G07	PVC-U Threaded socket Rp reinforced (DN10-50)
G09	PVC-U Threaded socket NPT
G30	PP-H Fusion socket metric
G32	PP-H Socket fusion spigot metric
G33	PP-H Threaded socket Rp
G34	PP-H Threaded socket NPT reinforced
G35	PP-H Butt fusion spigot SDR 11 metric IR-PLUS
G36	PP-H Butt fusion spigot SDR 17.6 metric (limited dimension range)
G37	PP-H Butt fusion spigot long SDR11 metric
G40	PE-100 Fusion socket metric
G41	PE-100 Butt fusion spigot SDR11 metric
G42	PE-100 Butt fusion spigot SDR17.6 metric (limited dimension range)
G43	PE-100 Butt fusion spigot long SDR11 metric
G44	PE-100 Butt fusion spigot long SDR17.6 metric (DN65-100)
G60	Fixed flange PVC-U serrated metric
G61	Fixed flange PVC-U flat metric
G70	Backing flange PVC-U metric
G71	Backing flange PVC-U inch ANSI
G72	Backing flange PP-steel metric
G73	Backing flange PP-steel ANSI
G78	Backing flange PVC-U JIS (DN65-100)
G80	PVC-U Valve end blank

Multi-functional module

I01	No multi-functional module
I02	Empty module
I03	Module with 2 limit switches Ag, Ni
I04	Module with 2 limit switches Au
I05	Module with 2 inductive switches Namur
I06	Module with 2 inductive switches PNP
I07	Module with 2 inductive switches NPN

Handle

K01	Standard handle red
K02	Standard handle black
K11	Multi-functional handle red

Mounting plate

L01	without mounting plate
L02	with mounting plate

A01 B01 C09 D01 E01 F02 G01 G43 I01 K01 L02 =

left right

Ball valves electric

DN10/15 - 50

Ball valve type 107 PVC-U 100-230V
With manual emergency override
With solvent cement sockets metric

Model:

- Built on with electric actuator EA11
- For easy installation and removal
- Integrated stainless steel mounting inserts
- Voltage 100-230 V, 50-60 Hz
- Control range 90°<)
- Control time 5 s/90°<)

Option:

- Individual configuration of the valve (see form)

d [mm]	DN [mm]	PN	kv-value (Δp=1 bar) [l/min]	EPDM Code	FPM Code	kg
16	10	10	70	**199 107 002**	**199 107 012**	2.072
20	15	10	185	**199 107 003**	**199 107 013**	2.072
25	20	10	350	**199 107 004**	**199 107 014**	2.189
32	25	10	700	**199 107 005**	**199 107 015**	2.189
40	32	10	1000	**199 107 006**	**199 107 016**	2.592
50	40	10	1600	**199 107 007**	**199 107 017**	2.914
63	50	10	3100	**199 107 008**	**199 107 018**	2.914

d [mm]	D [mm]	H [mm]	H1 [mm]	H2 [mm]	H3 [mm]	H5 [mm]	L [mm]	L1 [mm]	L2 [mm]	L4 [mm]	L5 [mm]	L6 [mm]	L7 [mm]	L8 [mm]	z [mm]
16	50	200	27	64	64	137	92	161	56	25	77	83	122	33	64
20	50	200	27	64	64	137	95	161	56	25	77	83	122	33	64
25	58	209	30	73	64	137	110	161	65	25	77	83	122	33	72
32	68	209	36	73	64	137	123	161	71	25	77	83	122	33	79
40	84	220	44	84	64	137	146	161	85	45	77	83	122	33	94
50	97	220	51	84	64	137	157	161	89	45	77	83	122	33	95
63	124	243	64	106	64	137	183	161	101	45	77	83	122	33	107

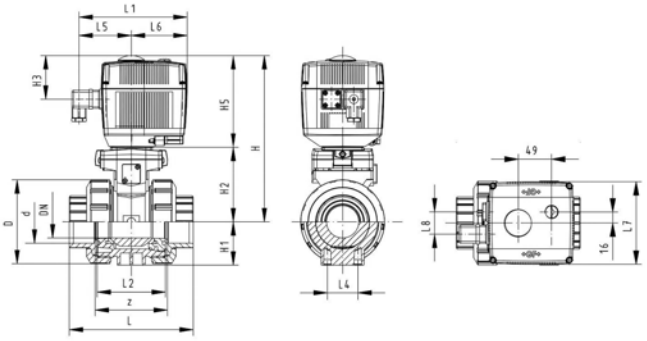

DN10/15 - 50

Ball valve type 107 PVC-U 24V
With manual emergency override
With solvent cement sockets metric

Model:

- Built on with electric actuator EA11
- For easy installation and removal
- Integrated stainless steel mounting inserts
- Voltage 24 V AC/DC
- Control range 90°<)
- Control time 5 s/90°<)

Option:

- Individual configuration of the valve (see form)

d [mm]	DN [mm]	PN	kv-value (Δp=1 bar) [l/min]	EPDM Code	FPM Code	kg
16	10	10	70	**199 107 042**	**199 107 052**	2.072
20	15	10	185	**199 107 043**	**199 107 053**	2.072
25	20	10	350	**199 107 044**	**199 107 054**	2.189
32	25	10	700	**199 107 045**	**199 107 055**	2.189
40	32	10	1000	**199 107 046**	**199 107 056**	2.592
50	40	10	1600	**199 107 047**	**199 107 057**	2.914
63	50	10	3100	**199 107 048**	**199 107 058**	3.772

d [mm]	D [mm]	H [mm]	H1 [mm]	H2 [mm]	H3 [mm]	H5 [mm]	L [mm]	L1 [mm]	L2 [mm]	L4 [mm]	L5 [mm]	L6 [mm]	L7 [mm]	L8 [mm]	z [mm]
16	50	200	27	64	64	137	92	161	56	25	77	83	122	33	64
20	50	200	27	64	64	137	95	161	56	25	77	83	122	33	64
25	58	209	30	73	64	137	110	161	65	25	77	83	122	33	72
32	68	209	36	73	64	137	123	161	71	25	77	83	122	33	79
40	84	220	44	84	64	137	146	161	85	45	77	83	122	33	94
50	97	220	51	84	64	137	157	161	89	45	77	83	122	33	95
63	124	243	64	106	64	137	183	161	101	45	77	83	122	33	107

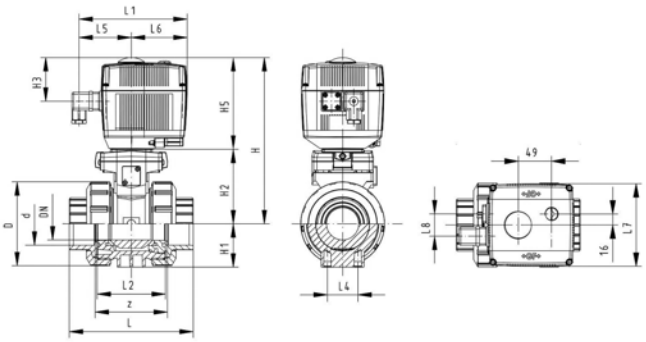

DN10/15 - 50

Ball valve type 107 PVC-U 100-230V
With manual emergency override
With solvent cement spigots metric

Model:

- Built on with electric actuator EA11
- For easy installation and removal
- Integrated stainless steel mounting inserts
- Voltage 100-230 V, 50-60 Hz
- Control range 90°<)
- Control time 5 s/90°<)

Option:

- Individual configuration of the valve (see form)

d [mm]	DN [mm]	PN	kv-value (Δp=1 bar) [l/min]	EPDM Code	FPM Code	kg
16	10	10	70	**199 107 022**	**199 107 032**	2.072
20	15	10	185	**199 107 023**	**199 107 033**	2.072
25	20	10	350	**199 107 024**	**199 107 034**	2.189
32	25	10	700	**199 107 025**	**199 107 035**	2.189
40	32	10	1000	**199 107 026**	**199 107 036**	2.592
50	40	10	1600	**199 107 027**	**199 107 037**	2.914
63	50	10	3100	**199 107 028**	**199 107 038**	3.772

d [mm]	D [mm]	H [mm]	H1 [mm]	H2 [mm]	H3 [mm]	H5 [mm]	L [mm]	L1 [mm]	L2 [mm]	L3 [mm]	L4 [mm]	L5 [mm]	L6 [mm]	L7 [mm]	L8 [mm]
16	50	200	27	64	64	137	114	161	56	130	25	77	83	122	33
20	50	200	27	64	64	137	124	161	56	130	25	77	83	122	33
25	58	209	30	73	64	137	144	161	65	150	25	77	83	122	33
32	68	209	36	73	64	137	154	161	71	160	25	77	83	122	33
40	84	220	44	84	64	137	174	161	85	180	45	77	83	122	33
50	97	220	51	84	64	137	194	161	89	200	45	77	83	122	33
63	124	243	64	106	64	137	224	161	101	230	45	77	83	122	33

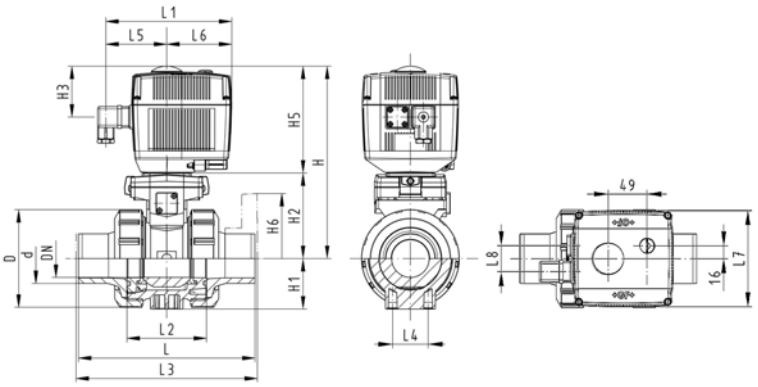

DN10/15 - 50

Ball valve type 107 PVC-U 24V
With manual emergency override
With solvent cement spigots metric

Model:

- Built on with electric actuator EA11
- For easy installation and removal
- Integrated stainless steel mounting inserts
- Voltage 24 V AC/DC
- Control range 90°<)
- Control time 5 s/90°<)

Option:

- Individual configuration of the valve (see form)

d [mm]	DN [mm]	PN	kv-value (Δp=1 bar) [l/min]	EPDM Code	FPM Code	kg
16	10	10	70	**199 107 062**	**199 107 072**	2.072
20	15	10	185	**199 107 063**	**199 107 073**	1.830
25	20	10	350	**199 107 064**	**199 107 074**	2.189
32	25	10	700	**199 107 065**	**199 107 075**	2.189
40	32	10	1000	**199 107 066**	**199 107 076**	2.592
50	40	10	1600	**199 107 067**	**199 107 077**	2.914
63	50	10	3100	**199 107 068**	**199 107 078**	3.772

d [mm]	D [mm]	H [mm]	H1 [mm]	H2 [mm]	H3 [mm]	H5 [mm]	L [mm]	L1 [mm]	L2 [mm]	L3 [mm]	L4 [mm]	L5 [mm]	L6 [mm]	L7 [mm]	L8 [mm]
16	50	200	27	64	64	137	114	161	56	130	25	77	83	122	33
20	50	200	27	64	64	137	124	161	56	130	25	77	83	122	33
25	58	209	30	73	64	137	144	161	65	150	25	77	83	122	33
32	68	209	36	73	64	137	154	161	71	160	25	77	83	122	33
40	84	220	44	84	64	137	174	161	85	180	45	77	83	122	33
50	97	220	51	84	64	137	194	161	89	200	45	77	83	122	33
63	124	243	64	106	64	137	224	161	101	230	45	77	83	122	33

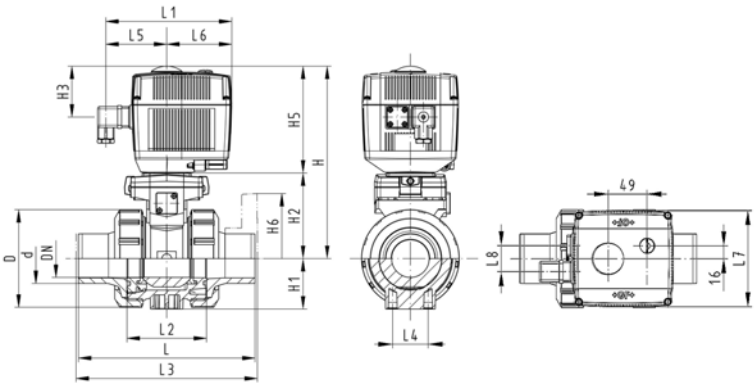

DN10/15 - 50

Ball valve type 107 PVC-U 100-230V
With manual emergency override
With threaded sockets Rp

Model:

- Built on with electric actuator EA11
- For easy installation and removal
- Integrated stainless steel mounting inserts
- Voltage 100-230 V, 50-60 Hz
- Control range 90°<)
- Control time 5 s/90°<)

Option:

- Individual configuration of the valve (see form)

Rp [inch]	DN [mm]	PN	kv-value (Δp=1 bar) [l/min]	EPDM Code	FPM Code	kg
⅜	10	10	70	**199 107 622**	**199 107 632**	2.100
½	15	10	185	**199 107 623**	**199 107 633**	2.100
¾	20	10	350	**199 107 624**	**199 107 634**	2.200
1	25	10	700	**199 107 625**	**199 107 635**	2.300
1 ¼	32	10	1000	**199 107 626**	**199 107 636**	2.600
1 ½	40	10	1600	**199 107 627**	**199 107 637**	3.000
2	50	10	3100	**199 107 628**	**199 107 638**	3.800

Rp [inch]	D [mm]	H [mm]	H1 [mm]	H2 [mm]	H3 [mm]	H5 [mm]	L [mm]	L1 [mm]	L2 [mm]	L4 [mm]	L5 [mm]	L6 [mm]	L7 [mm]	L8 [mm]	z [mm]
⅜	50	200	27	64	64	137	92	161	56	25	77	83	122	33	64
½	50	200	27	64	64	137	95	161	56	25	77	83	122	33	64
¾	58	209	30	73	64	137	110	161	65	25	77	83	122	33	72
1	68	209	36	73	64	137	123	161	71	25	77	83	122	33	79
1 ¼	84	220	44	84	64	137	146	161	85	45	77	83	122	33	94
1 ½	97	220	51	84	64	137	157	161	89	45	77	83	122	33	95
2	124	243	64	106	64	137	183	161	101	45	77	83	122	33	107

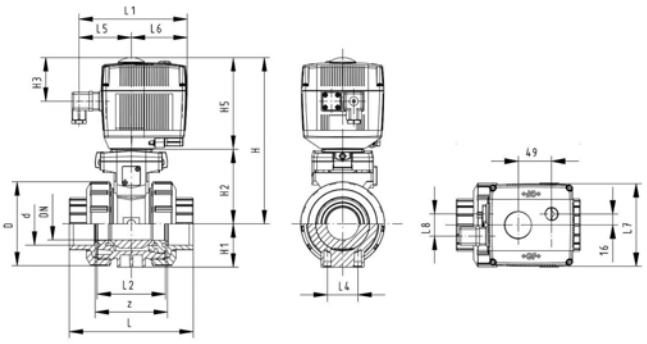

DN10/15 - 50

Ball valve type 107 PVC-U 24V
With manual emergency override
With threaded sockets Rp

Model:

- Built on with electric actuator EA11
- For easy installation and removal
- Integrated stainless steel mounting inserts
- Voltage 24 V AC/DC
- Control range 90°<)
- Control time 5 s/90°<)

Option:

- Individual configuration of the valve (see form)

Rp [inch]	DN [mm]	PN	kv-value (Δp=1 bar) [l/min]	EPDM Code	FPM Code	kg
⅜	10	10	70	**199 107 662**	**199 107 672**	2.100
½	15	10	185	**199 107 663**	**199 107 673**	2.100
¾	20	10	350	**199 107 664**	**199 107 674**	2.200
1	25	10	700	**199 107 665**	**199 107 675**	2.300
1 ¼	32	10	1000	**199 107 666**	**199 107 676**	2.600
1 ½	40	10	1600	**199 107 667**	**199 107 677**	3.000
2	50	10	3100	**199 107 668**	**199 107 678**	3.800

Rp [inch]	D [mm]	H [mm]	H1 [mm]	H2 [mm]	H3 [mm]	H5 [mm]	L [mm]	L1 [mm]	L2 [mm]	L4 [mm]	L5 [mm]	L6 [mm]	L7 [mm]	L8 [mm]	z [mm]
⅜	50	200	27	64	64	137	92	161	56	25	77	83	122	33	64
½	50	200	27	64	64	137	95	161	56	25	77	83	122	33	64
¾	58	209	30	73	64	137	110	161	65	25	77	83	122	33	72
1	68	209	36	73	64	137	123	161	71	25	77	83	122	33	79
1 ¼	84	220	44	84	64	137	146	161	85	45	77	83	122	33	94
1 ½	97	220	51	84	64	137	157	161	89	45	77	83	122	33	95
2	124	243	64	106	64	137	183	161	101	45	77	83	122	33	107

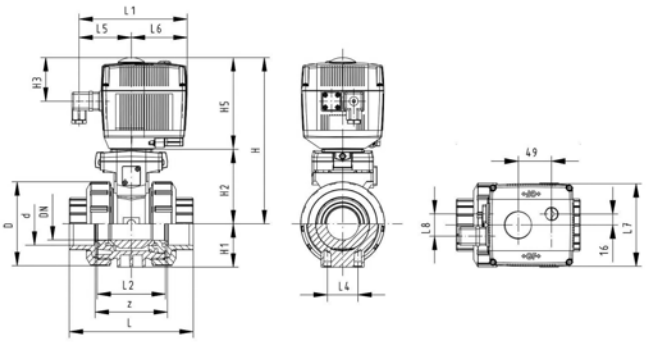

DN10/15 - 50

Ball valve type 107 PVC-U 100-230V
With manual emergency override
With fixed flanges serrated metric

Model:

- Built on with electric actuator EA11
- For easy installation and removal
- Integrated stainless steel mounting inserts
- Voltage 100-230 V, 50-60 Hz
- Control range 90°<)
- Control time 5 s/90°<)
- Overall length according to EN 558-1
- Connecting dimensions: ISO 7005 / EN 1092 / DIN 2501 PN10 / BS4504

Option:

- Individual configuration of the valve (see form)

d [mm]	DN [mm]	Inch	PN	kv-value (Δp=1 bar) [l/min]	EPDM Code	FPM Code	kg
20	15	½	10	185	**199 107 603**	**199 107 613**	2.300
25	20	¾	10	350	**199 107 604**	**199 107 614**	2.500
32	25	1	10	700	**199 107 605**	**199 107 615**	2.700
40	32	1 ¼	10	1000	**199 107 606**	**199 107 616**	3.200
50	40	1 ½	10	1600	**199 107 607**	**199 107 617**	3.700
63	50	2	10	3100	**199 107 608**	**199 107 618**	4.776

d [mm]	D [mm]	H [mm]	H1 [mm]	H2 [mm]	H3 [mm]	H5 [mm]	H6 [mm]	L [mm]	L1 [mm]	L2 [mm]	L3 [mm]	L4 [mm]	L5 [mm]	L6 [mm]	L7 [mm]
20	50	201	27	64	65	138	48	124	160	56	130	25	77	83	122
25	58	210	30	73	65	138	53	144	160	65	150	25	77	83	122
32	68	210	36	73	65	138	58	154	160	71	160	25	77	83	122
40	84	221	44	84	65	138	70	174	160	85	180	45	77	83	122
50	97	221	51	84	65	138	75	194	160	89	200	45	77	83	122
63	124	244	64	106	65	138	83	224	160	101	230	45	77	83	122

d [mm]	L8 [mm]
20	33
25	33
32	33
40	33
50	33
63	33

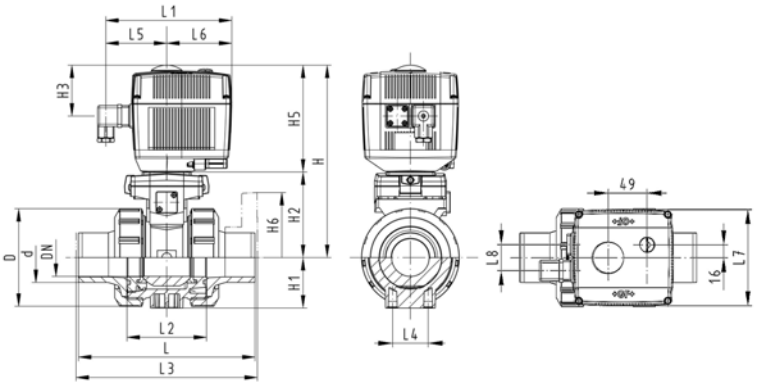

DN10/15 - 50

Ball valve type 107 PVC-U 24V
With manual emergency override
With fixed flanges serrated metric

Model:

- Built on with electric actuator EA11
- For easy installation and removal
- Integrated stainless steel mounting inserts
- Voltage 24 V AC/DC
- Control range 90°<)
- Control time 5 s/90°<)
- Overall length according to EN 558-1
- Connecting dimensions: ISO 7005 / EN 1092 / DIN 2501 PN10 / BS4504

Option:

- Individual configuration of the valve (see form)

d [mm]	DN [mm]	Inch	PN	kv-value (Δp=1 bar) [l/min]	EPDM Code	FPM Code	kg
20	15	½	10	185	**199 107 643**	**199 107 653**	2.300
25	20	¾	10	350	**199 107 644**	**199 107 654**	2.500
32	25	1	10	700	**199 107 645**	**199 107 655**	2.700
40	32	1 ¼	10	1000	**199 107 646**	**199 107 656**	3.200
50	40	1 ½	10	1600	**199 107 647**	**199 107 657**	3.700
63	50	2	10	3100	**199 107 648**	**199 107 658**	4.800

d [mm]	D [mm]	H [mm]	H1 [mm]	H2 [mm]	H3 [mm]	H5 [mm]	H6 [mm]	L [mm]	L1 [mm]	L2 [mm]	L3 [mm]	L4 [mm]	L5 [mm]	L6 [mm]	L7 [mm]
20	50	201	27	64	65	138	48	124	160	56	130	25	77	83	122
25	58	210	30	73	65	138	53	144	160	65	150	25	77	83	122
32	68	210	36	73	65	138	58	154	160	71	160	25	77	83	122
40	84	221	44	84	65	138	70	174	160	85	180	45	77	83	122
50	97	221	51	84	65	138	75	194	160	89	200	45	77	83	122
63	124	244	64	106	65	138	83	224	160	101	230	45	77	83	122

d [mm]	L8 [mm]
20	33
25	33
32	33
40	33
50	33
63	33

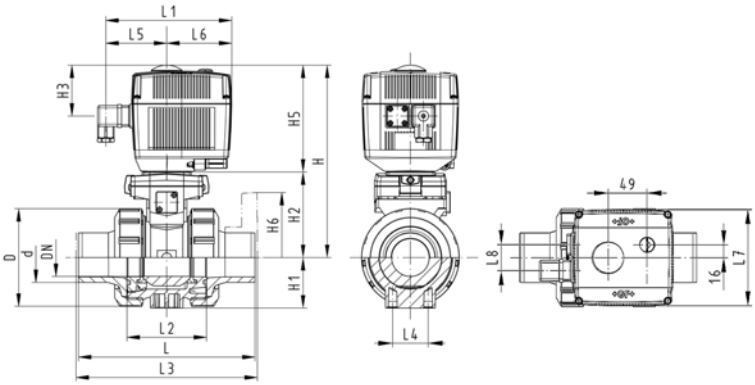

DN10/15 - 50

Ball valve type 107 PVC-U 100-230V
With manual emergency override
With solvent cement sockets Inch BS

Model:

- Built on with electric actuator EA11
- For easy installation and removal
- Integrated stainless steel mounting inserts
- Voltage 100-230 V, 50-60 Hz
- Control range 90°<)
- Control time 5 s/90°<)

Option:

- Individual configuration of the valve (see form)

Inch	DN [mm]	PN	kv-value (Δp=1 bar) [l/min]	EPDM Code	FPM Code	kg
⅜	10	10	70	**199 107 402**	**199 107 412**	2.100
½	15	10	185	**199 107 403**	**199 107 413**	2.100
¾	20	10	350	**199 107 404**	**199 107 414**	2.200
1	25	10	700	**199 107 405**	**199 107 415**	2.300
1 ¼	32	10	1000	**199 107 406**	**199 107 416**	2.600
1 ½	40	10	1600	**199 107 407**	**199 107 417**	3.000
2	50	10	3100	**199 107 408**	**199 107 418**	3.800

Inch	D [mm]	H [mm]	H1 [mm]	H2 [mm]	H3 [mm]	H5 [mm]	L [mm]	L1 [mm]	L2 [mm]	L4 [mm]	L5 [mm]	L6 [mm]	L7 [mm]	L8 [mm]	z [mm]
⅜	50	200	27	64	64	137	92	161	56	25	79	1	122	67	60
½	50	200	27	64	64	137	95	161	56	25	79	83	122	67	60
¾	58	209	30	73	64	137	110	161	65	25	79	83	122	67	69
1	68	209	36	73	64	137	123	161	71	25	79	83	122	67	75
1 ¼	84	220	44	84	64	137	146	161	85	45	79	83	122	67	89
1 ½	97	220	51	84	64	137	157	161	89	45	79	83	122	67	97
2	124	243	64	106	64	137	183	161	101	45	79	83	122	67	110

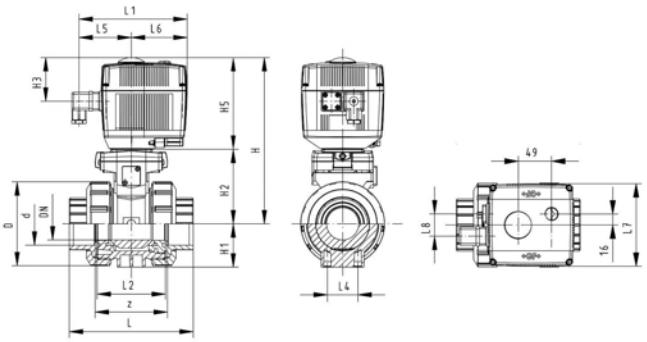

DN10/15 - 50

Ball valve type 107 PVC-U 24V
With manual emergency override
With solvent cement sockets Inch BS

Model:

- Built on with electric actuator EA11
- For easy installation and removal
- Integrated stainless steel mounting inserts
- Voltage 24 V AC/DC
- Control range 90°<)
- Control time 5 s/90°<)

Option:

- Individual configuration of the valve (see form)

Inch	DN [mm]	PN	kv-value (Δp=1 bar) [l/min]	EPDM Code	FPM Code	kg
⅜	10	10	70	**199 107 442**	**199 107 452**	2.100
½	15	10	185	**199 107 443**	**199 107 453**	2.100
¾	20	10	350	**199 107 444**	**199 107 454**	2.200
1	25	10	700	**199 107 445**	**199 107 455**	2.300
1 ¼	32	10	1000	**199 107 446**	**199 107 456**	2.600
1 ½	40	10	1600	**199 107 447**	**199 107 457**	3.000
2	50	10	3100	**199 107 448**	**199 107 458**	3.800

Inch	D [mm]	H [mm]	H1 [mm]	H2 [mm]	H3 [mm]	H5 [mm]	L [mm]	L1 [mm]	L2 [mm]	L4 [mm]	L5 [mm]	L6 [mm]	L7 [mm]	L8 [mm]	z [mm]
⅜	50	200	27	64	64	137	92	161	56	25	79	83	122	67	60
½	50	200	27	64	64	137	95	161	56	25	79	83	122	67	60
¾	58	209	30	73	64	137	110	161	65	25	79	83	122	67	69
1	68	209	36	73	64	137	123	161	71	25	79	83	122	67	75
1 ¼	84	220	44	84	64	137	146	161	85	45	79	83	122	67	89
1 ½	97	220	51	84	64	137	157	161	89	45	79	83	122	67	97
2	124	243	64	106	64	137	183	161	101	45	79	83	122	67	110

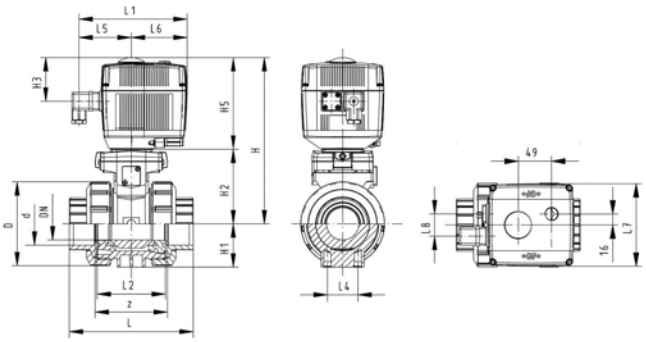

DN10/15 - 50

Ball valve type 130 PVC-U 100-230V
With manual emergency override
With solvent cement sockets metric

Model:

- Assignment of actuators EA21 (DN10/15-50), EA31 (DN65-100 if available)
- Image and drawing DN65-100 please see **New product ball valve DN65-100**
- Integrated stainless steel mounting inserts
- Voltage 100-230 V, 50-60 Hz
- Control range 90°<)
- Control time: EA21: 5s/90°<), EA31: 15s/90°<)

Option:

- Individual configuration of the valve (see form)

d [mm]	DN [mm]	PN	kv-value (Δp=1 bar) [l/min]	EPDM Code	FPM Code	kg
16	10	10	70	**199 130 002**	**199 130 012**	2.100
20	15	10	185	**199 130 003**	**199 130 013**	2.100
25	20	10	350	**199 130 004**	**199 130 014**	2.200
32	25	10	700	**199 130 005**	**199 130 015**	2.300
40	32	10	1000	**199 130 006**	**199 130 016**	2.600
50	40	10	1600	**199 130 007**	**199 130 017**	3.000
63	50	10	3100	**199 130 008**	**199 130 018**	3.800
New 75	65	10	5000	**199 130 009**	**199 130 019**	3.900
New 90	80	10	7000	**199 130 010**	**199 130 020**	4.800
New 110	100	10	11000	**199 130 011**	**199 130 021**	6.300

d [mm]	D [mm]	H [mm]	H1 [mm]	H2 [mm]	H3 [mm]	H5 [mm]	L [mm]	L1 [mm]	L2 [mm]	L4 [mm]	L5 [mm]	L6 [mm]	L7 [mm]	z [mm]
16	50	231	27	64	94	167	92	180	56	25	97	83	122	64
20	50	231	27	64	94	167	95	180	56	25	97	83	122	64
25	58	240	30	73	94	167	110	180	65	25	97	83	122	72
32	68	240	36	73	94	167	123	180	71	25	97	83	122	79
40	84	251	44	84	94	167	146	180	85	45	97	83	122	94
50	97	251	51	84	94	167	157	180	89	45	97	83	122	95
63	124	273	64	106	94	167	183	180	101	45	97	83	122	107
New 75	166	346	85	156	94	190	233	180	136	70	98	83	122	144
New 90	200	358	105	168	94	190	254	180	141	70	98	83	122	151
New 110	238	365	123	175	94	190	301	180	164	120	98	83	122	174

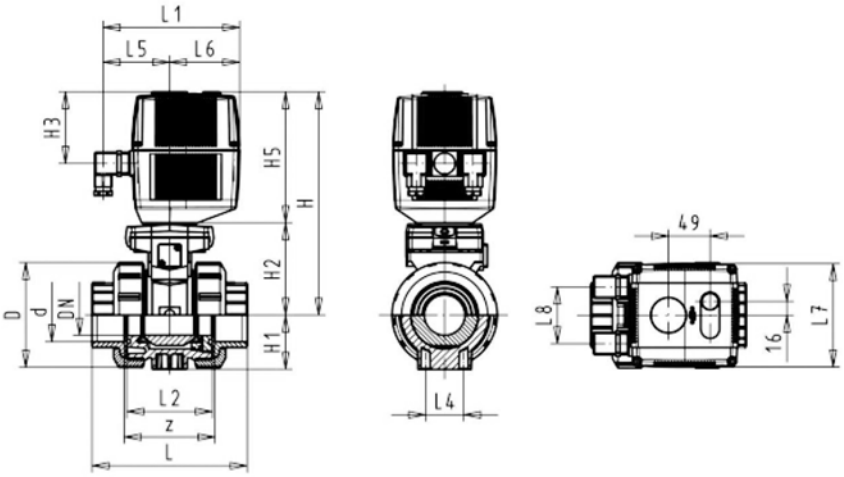

DN10/15 - 50

Ball valve type 130 PVC-U 24V
With manual emergency override
With solvent cement sockets metric

Model:

- Assignment of actuators EA21 (DN10/15-50), EA31 (DN65-100 if available)
- Image and drawing DN65-100 please see **New product ball valve DN65-100**
- For easy installation and removal
- Integrated stainless steel mounting inserts
- Voltage 24 V AC/DC
- Control range 90°<)
- Control time: EA21: 5s/90°<), EA31: 15s/90°<)

Option:

- Individual configuration of the valve (see form)

d [mm]	DN [mm]	PN	kv-value (Δp=1 bar) [l/min]	EPDM Code	FPM Code	kg
16	10	10	70	**199 130 042**	**199 130 052**	2.100
20	15	10	185	**199 130 043**	**199 130 053**	2.100
25	20	10	350	**199 130 044**	**199 130 054**	2.200
32	25	10	700	**199 130 045**	**199 130 055**	2.300
40	32	10	1000	**199 130 046**	**199 130 056**	2.600
50	40	10	1600	**199 130 047**	**199 130 057**	3.000
63	50	10	3100	**199 130 048**	**199 130 058**	3.800
New 75	65	10	5000	**199 130 049**	**199 130 059**	3.900
New 90	80	10	7000	**199 130 050**	**199 130 060**	4.800
New 110	100	10	11000	**199 130 051**	**199 130 061**	6.300

d [mm]	D [mm]	H [mm]	H1 [mm]	H2 [mm]	H3 [mm]	H5 [mm]	L [mm]	L1 [mm]	L2 [mm]	L4 [mm]	L5 [mm]	L6 [mm]	L7 [mm]	z [mm]
16	50	231	27	64	94	167	92	180	56	25	97	83	122	64
20	50	231	27	64	94	167	95	180	56	25	97	83	122	64
25	58	240	30	73	94	167	110	180	65	25	97	83	122	72
32	68	240	36	73	94	167	123	180	71	25	97	83	122	79
40	84	251	44	84	94	167	146	180	85	45	97	83	122	94
50	97	251	51	84	94	167	157	180	89	45	97	83	122	95
63	124	273	64	106	94	167	183	180	101	45	97	83	122	107
New 75	166	347	85	156	94	190	233	180	136	70	98	83	122	144
New 90	200	358	105	168	94	190	254	180	141	70	98	83	122	151
New 110	238	365	123	175	94	190	301	180	164	120	98	83	122	174

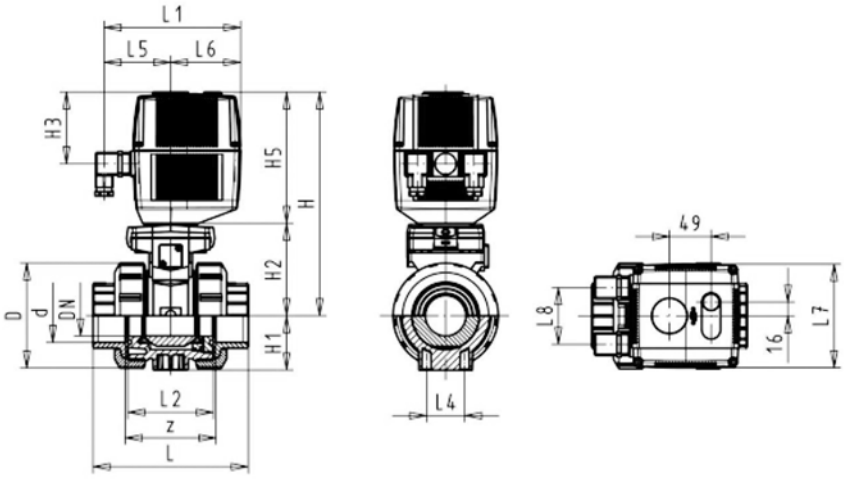

DN10/15 - 50

Ball valve type 130 PVC-U 100-230V
With manual emergency override
With solvent cement spigots metric

Model:

- Assignment of actuators EA21 (DN10/15-50), EA31 (DN65-100 if available)
- Image and drawing DN65-100 please see **New product ball valve DN65-100**
- Integrated stainless steel mounting inserts
- Voltage 100-230 V, 50-60 Hz
- Control range 90°<)
- Control time: EA21: 5s/90°<), EA31: 15s/90°<)

Option:

- Individual configuration of the valve (see form)

d [mm]	DN [mm]	PN	kv-value (Δp=1 bar) [l/min]	EPDM Code	FPM Code	kg
16	10	10	70	**199 130 022**	**199 130 032**	2.100
20	15	10	185	**199 130 023**	**199 130 033**	2.100
25	20	10	350	**199 130 024**	**199 130 034**	2.200
32	25	10	700	**199 130 025**	**199 130 035**	2.300
40	32	10	1000	**199 130 026**	**199 130 036**	2.600
50	40	10	1600	**199 130 027**	**199 130 037**	3.000
63	50	10	3100	**199 130 028**	**199 130 038**	3.800
New 75	65	10	5000	**199 130 029**	**199 130 039**	4.000
New 90	80	10	7000	**199 130 030**	**199 130 040**	5.000
New 110	100	10	11000	**199 130 031**	**199 130 041**	6.500

d [mm]	D [mm]	H [mm]	H1 [mm]	H2 [mm]	H3 [mm]	H5 [mm]	L [mm]	L1 [mm]	L2 [mm]	L3 [mm]	L4 [mm]	L5 [mm]	L6 [mm]	L7 [mm]
16	50	231	27	64	94	167	114	180	56	130	25	97	83	122
20	50	231	27	64	94	167	124	180	56	130	25	97	83	122
25	58	240	30	73	94	167	144	180	65	150	25	97	83	122
32	68	240	36	73	94	167	154	180	71	160	25	97	83	122
40	84	251	44	84	94	167	174	180	85	180	45	97	83	122
50	97	251	51	84	94	167	194	180	89	200	45	97	83	122
63	124	273	64	106	94	167	224	180	101	230	45	97	83	122
New 75	166	346	85	156	94	190	284	180	136	290	70	98	83	122
New 90	200	358	105	168	94	190	300	180	141	310	70	98	83	122
New 110	238	365	123	175	94	190	340	180	164	350	120	98	83	122

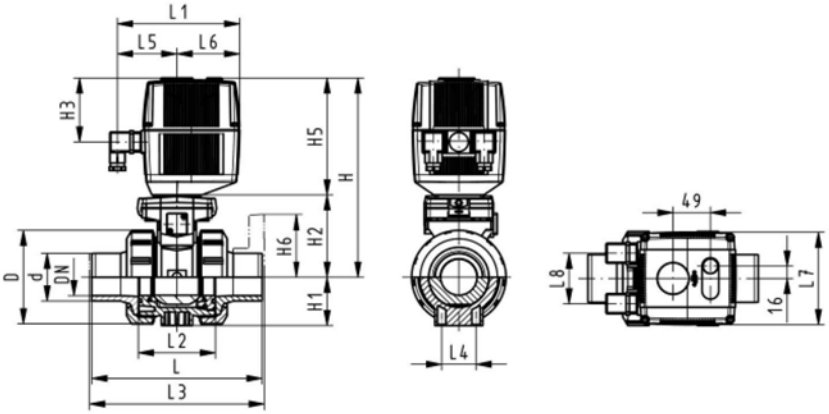

DN10/15 - 50

Ball valve type 130 PVC-U 24V
With manual emergency override
With solvent cement spigots metric

Model:

- Assignment of actuators EA21 (DN10/15-50), EA31 (DN65-100 if available)
- Image and drawing DN65-100 please see **New product ball valve DN65-100**
- For easy installation and removal
- Integrated stainless steel mounting inserts
- Voltage 24 V AC/DC
- Control range 90°<)
- Control time: EA21: 5s/90°<), EA31: 15s/90°<)

Option:

- Individual configuration of the valve (see form)

d [mm]	DN [mm]	PN	kv-value (Δp=1 bar) [l/min]	EPDM Code	FPM Code	kg
16	10	10	70	**199 130 062**	**199 130 072**	2.100
20	15	10	185	**199 130 063**	**199 130 073**	2.100
25	20	10	350	**199 130 064**	**199 130 074**	2.200
32	25	10	700	**199 130 065**	**199 130 075**	2.300
40	32	10	1000	**199 130 066**	**199 130 076**	2.600
50	40	10	1600	**199 130 067**	**199 130 077**	3.000
63	50	10	3100	**199 130 068**	**199 130 078**	3.800
New 75	65	10	5000	**199 130 069**	**199 130 079**	4.000
New 90	80	10	7000	**199 130 070**	**199 130 080**	5.000
New 110	100	10	11000	**199 130 071**	**199 130 081**	6.500

d [mm]	D [mm]	H [mm]	H1 [mm]	H2 [mm]	H3 [mm]	H5 [mm]	L [mm]	L1 [mm]	L2 [mm]	L3 [mm]	L4 [mm]	L5 [mm]	L6 [mm]	L7 [mm]
16	50	231	27	64	94	167	114	180	56	130	25	97	83	122
20	50	231	27	64	94	167	124	180	56	130	25	97	83	122
25	58	240	30	73	94	167	144	180	65	150	25	97	83	122
32	68	240	36	73	94	167	154	180	71	160	25	97	83	122
40	84	251	44	84	94	167	174	180	85	180	45	97	83	122
50	97	251	51	84	94	167	194	180	89	200	45	97	83	122
63	124	273	64	106	94	167	224	180	101	230	45	97	83	122
New 75	166	346	85	156	94	190	284	180	136	290	70	98	83	122
New 90	200	358	105	168	94	190	300	180	141	310	70	98	83	122
New 110	238	365	123	175	94	190	340	180	164	350	120	98	83	122

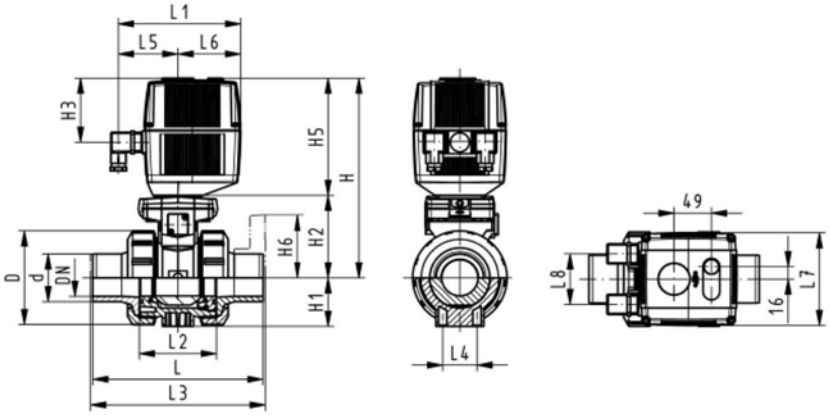

DN10/15 - 50

Ball valve type 130 PVC-U 100-230V
With manual emergency override
With threaded sockets Rp

Model:

- Assignment of actuators EA21 (DN10/15-50), EA31 (DN65-100 if available)
- Image and drawing DN65-100 please see **New product ball valve DN65-100**
- Integrated stainless steel mounting inserts
- Voltage 100-230 V, 50-60 Hz
- Control range 90°<)
- Control time: EA21: 5s/90°<), EA31: 15s/90°<)

Option:

- Individual configuration of the valve (see form)

Rp [inch]	DN [mm]	PN	kv-value (Δp=1 bar) [l/min]	EPDM Code	FPM Code	kg
⅜	10	10	70	**199 130 122**	**199 130 132**	2.100
½	15	10	185	**199 130 123**	**199 130 133**	2.100
¾	20	10	350	**199 130 124**	**199 130 134**	2.200
1	25	10	700	**199 130 125**	**199 130 135**	2.300
1 ¼	32	10	1000	**199 130 126**	**199 130 136**	2.600
1 ½	40	10	1600	**199 130 127**	**199 130 137**	3.000
2	50	10	3100	**199 130 128**	**199 130 138**	3.800
New 2 ½	65	10	5000	**199 130 129**	**199 130 139**	3.900
New 3	80	10	7000	**199 130 130**	**199 130 140**	4.900
New 4	100	10	11000	**199 130 131**	**199 130 141**	6.300

Rp [inch]	D [mm]	H [mm]	H1 [mm]	H2 [mm]	H3 [mm]	H5 [mm]	L [mm]	L1 [mm]	L2 [mm]	L4 [mm]	L5 [mm]	L6 [mm]	L7 [mm]	z [mm]
⅜	50	231	27	64	94	167	92	180	56	25	97	83	122	64
½	50	231	27	64	94	167	95	180	56	25	97	83	122	64
¾	58	240	30	73	94	167	110	180	65	25	97	83	122	72
1	68	240	36	73	94	167	123	180	71	25	97	83	122	79
1 ¼	84	251	44	84	94	167	146	180	85	45	97	83	122	94
1 ½	97	251	51	84	94	167	157	180	89	45	97	83	122	95
2	124	273	64	106	94	167	183	180	101	45	97	83	122	107
New 2 ½	166	346	85	156	94	190	233	180	136	70	98	83	122	144
New 3	200	358	105	168	94	190	254	180	141	70	98	83	122	151
New 4	238	365	123	175	94	190	301	180	164	120	98	83	122	174

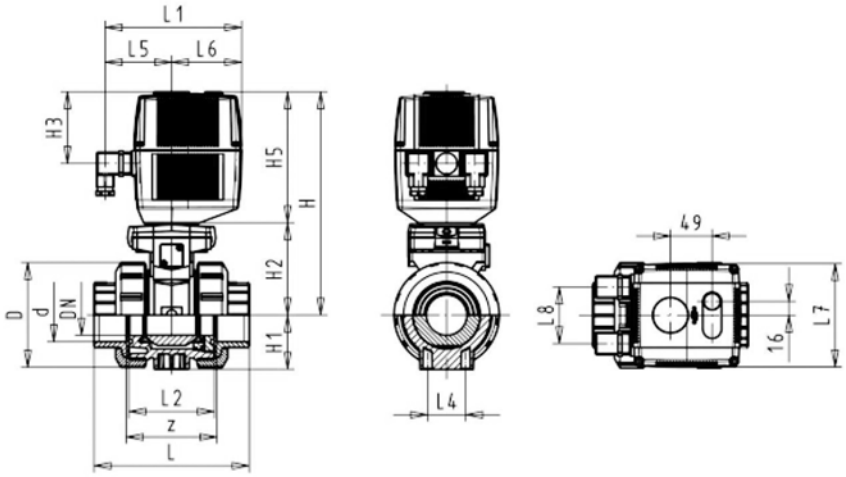

DN10/15 - 50

Ball valve type 130 PVC-U 24V
With manual emergency override
With threaded sockets Rp

Model:

- Assignment of actuators EA21 (DN10/15-50), EA31 (DN65-100 if available)
- Image and drawing DN65-100 please see **New product ball valve DN65-100**
- For easy installation and removal
- Integrated stainless steel mounting inserts
- Voltage 24 V AC/DC
- Control range 90°<)
- Control time: EA21: 5s/90°<), EA31: 15s/90°<)

Option:

- Individual configuration of the valve (see form)

Rp [inch]	DN [mm]	PN	kv-value (Δp=1 bar) [l/min]	EPDM Code	FPM Code	kg
⅜	10	10	70	**199 130 162**	**199 130 172**	2.100
½	15	10	185	**199 130 163**	**199 130 173**	2.100
¾	20	10	350	**199 130 164**	**199 130 174**	2.200
1	25	10	700	**199 130 165**	**199 130 175**	2.300
1 ¼	32	10	1000	**199 130 166**	**199 130 176**	2.600
1 ½	40	10	1600	**199 130 167**	**199 130 177**	3.000
2	50	10	3100	**199 130 168**	**199 130 178**	3.800
New 2 ½	65	10	5000	**199 130 169**	**199 130 179**	3.900
New 3	80	10	7000	**199 130 170**	**199 130 180**	4.900
New 4	100	10	11000	**199 130 171**	**199 130 181**	6.300

Rp [inch]	D [mm]	H [mm]	H1 [mm]	H2 [mm]	H3 [mm]	H5 [mm]	L [mm]	L1 [mm]	L2 [mm]	L4 [mm]	L5 [mm]	L6 [mm]	L7 [mm]	z [mm]
⅜	50	231	27	64	94	167	92	180	56	25	97	83	122	64
½	50	231	27	64	94	167	95	180	56	25	97	83	122	64
¾	58	240	30	73	94	167	110	180	65	25	97	83	122	72
1	68	240	36	73	94	167	123	180	71	25	97	83	122	79
1 ¼	84	251	44	84	94	167	146	180	85	45	97	83	122	94
1 ½	97	251	51	84	94	167	157	180	89	45	97	83	122	95
2	124	273	64	106	94	167	183	180	101	45	97	83	122	107
New 2 ½	166	346	85	156	94	190	233	180	136	70	98	83	122	144
New 3	200	358	105	168	94	190	254	180	141	70	98	83	122	151
New 4	238	365	123	175	94	190	301	180	164	120	98	83	122	174

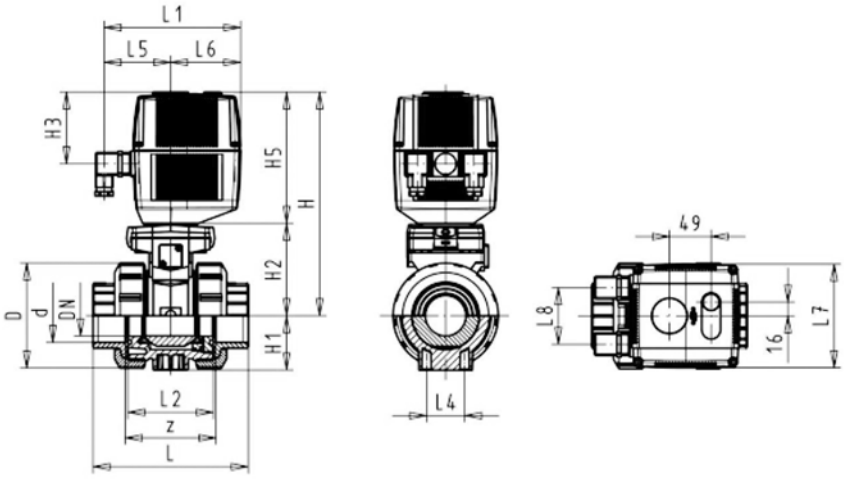

DN10/15 - 50

Ball valve type 130 PVC-U 100-230V
With manual emergency override
With fixed flanges serrated metric

Model:

- Assignment of actuators EA21 (DN10/15-50), EA31 (DN65-100 if available)
- Image and drawing DN65-100 please see **New product ball valve DN65-100**
- Integrated stainless steel mounting inserts
- Voltage 100-230 V, 50-60 Hz
- Control range 90°<)
- Control time: EA21: 5s/90°<), EA31: 15s/90°<)
- Overall length according to EN 558-1
- Connecting dimensions: ISO 7005 / EN 1092 / DIN 2501 PN10 / BS4504

Option:

- Individual configuration of the valve (see form)

d [mm]	DN [mm]	Inch	PN	kv-value (Δp=1 bar) [l/min]	EPDM Code	FPM Code	kg
20	15	½	10	185	**199 130 103**	**199 130 113**	2.300
25	20	¾	10	350	**199 130 104**	**199 130 114**	2.500
32	25	1	10	700	**199 130 105**	**199 130 115**	2.700
40	32	1 ¼	10	1000	**199 130 106**	**199 130 116**	3.200
50	40	1 ½	10	1600	**199 130 107**	**199 130 117**	3.700
63	50	2	10	3100	**199 130 108**	**199 130 118**	4.800

d [mm]	D [mm]	H [mm]	H1 [mm]	H2 [mm]	H3 [mm]	H5 [mm]	H6 [mm]	L [mm]	L1 [mm]	L2 [mm]	L3 [mm]	L4 [mm]	L5 [mm]	L6 [mm]	L7 [mm]
20	50	231	27	64	94	167	48	124	180	56	130	25	98	83	122
25	58	240	30	73	94	167	53	144	180	65	150	25	97	83	122
32	68	240	36	73	94	167	58	154	180	71	160	25	97	83	122
40	84	251	44	84	94	167	70	174	180	85	180	45	97	83	122
50	97	251	51	84	94	167	75	194	180	89	200	45	98	83	122
63	124	273	64	106	94	167	83	224	180	101	230	45	97	83	122

d [mm]	L8 [mm]
20	66
25	66
32	66
40	66
50	66
63	66

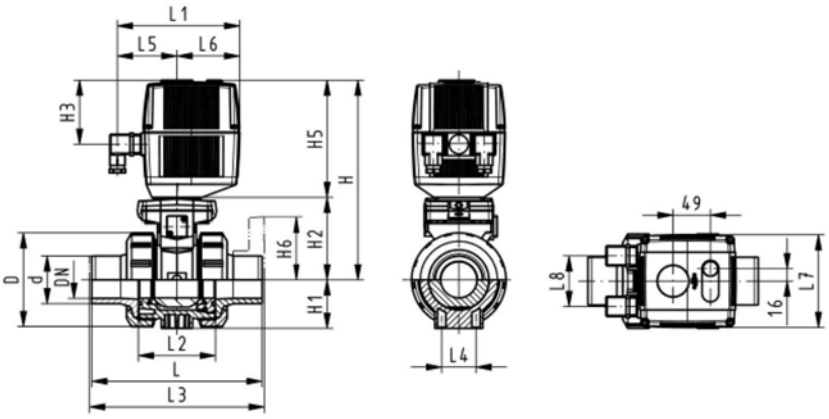

DN10/15 - 50

Ball valve type 130 PVC-U 24V
With manual emergency override
With fixed flanges serrated metric

Model:

- Assignment of actuators EA21 (DN10/15-50), EA31 (DN65-100 if available)
- Image and drawing DN65-100 please see **New product ball valve DN65-100**
- For easy installation and removal
- Integrated stainless steel mounting inserts
- Voltage 24 V AC/DC
- Control range 90°<)
- Control time: EA21: 5s/90°<), EA31: 15s/90°<)
- Overall length according to EN 558-1
- Connecting dimensions: ISO 7005 / EN 1092 / DIN 2501 PN10 / BS4504

Option:

- Individual configuration of the valve (see form)

d [mm]	DN [mm]	Inch	PN	kv-value (Δp=1 bar) [l/min]	EPDM Code	FPM Code	kg
20	15	½	10	185	**199 130 143**	**199 130 153**	2.300
25	20	¾	10	350	**199 130 144**	**199 130 154**	2.500
32	25	1	10	700	**199 130 145**	**199 130 155**	2.700
40	32	1 ¼	10	1000	**199 130 146**	**199 130 156**	3.200
50	40	1 ½	10	1600	**199 130 147**	**199 130 157**	3.700
63	50	2	10	3100	**199 130 148**	**199 130 158**	4.800

d [mm]	D [mm]	H [mm]	H1 [mm]	H2 [mm]	H3 [mm]	H5 [mm]	H6 [mm]	L [mm]	L1 [mm]	L2 [mm]	L3 [mm]	L4 [mm]	L5 [mm]	L6 [mm]	L7 [mm]
20	50	231	27	64	94	167	48	124	180	56	130	25	97	83	122
25	58	240	30	73	94	167	53	144	180	65	150	25	97	83	122
32	68	240	36	73	94	167	58	154	180	71	160	25	97	83	122
40	84	251	44	84	94	167	70	174	180	85	180	45	97	83	122
50	97	251	51	84	94	167	75	194	180	89	200	45	97	83	122
63	124	273	64	106	94	167	83	224	180	101	230	45	97	83	122

d [mm]	L8 [mm]
20	66
25	66
32	66
40	66
50	66
63	66

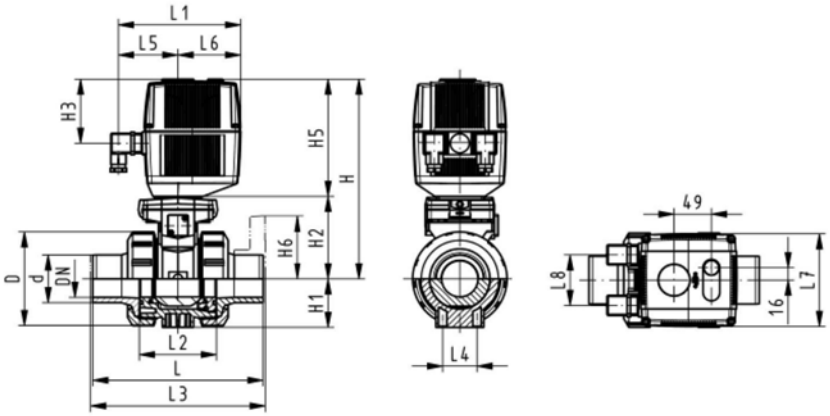

Ball valve type 130 PVC-U 100-230V
With manual emergency override
With backing flanges PP ST metric

Model:

- Assignment of actuators EA21 (DN10/15-50), EA31 (DN65-100 if available)
- Image and drawing DN65-100 please see **New product ball valve DN65-100**
- Integrated stainless steel mounting inserts
- Voltage 100-230 V, 50-60 Hz
- Control range 90°<)
- Control time: EA21: 5s/90°<), EA31: 15s/90°<)
- Overall length according to EN 558-1
- Connecting dimensions: ISO 7005, EN 1092, BS 4504, DIN 2501; bolt circle PN 10

Option:

- Individual configuration of the valve (see form)

d [mm]	DN [mm]	PN	kv-value (Δp=1 bar) [l/min]	EPDM Code	FPM Code	kg
New 75	65	10	5000	**199 134 349**	**199 134 359**	8.100
New 90	80	10	7000	**199 134 350**	**199 134 360**	9.900
New 110	100	10	11000	**199 134 351**	**199 134 361**	13.200

d [mm]	D [mm]	H [mm]	H1 [mm]	H2 [mm]	H3 [mm]	H5 [mm]	H6 [mm]	L [mm]	L1 [mm]	L2 [mm]	L3 [mm]	L4 [mm]	L5 [mm]	L6 [mm]
New 75	166	346	85	156	94	190	93	284	180	136	290	70	98	83
New 90	200	358	105	168	94	190	100	300	180	141	310	70	98	83
New 110	238	365	123	175	94	190	110	340	180	164	350	120	98	83

d [mm]	L7 [mm]	L8 [mm]
New 75	122	66
New 90	122	66
New 110	122	66

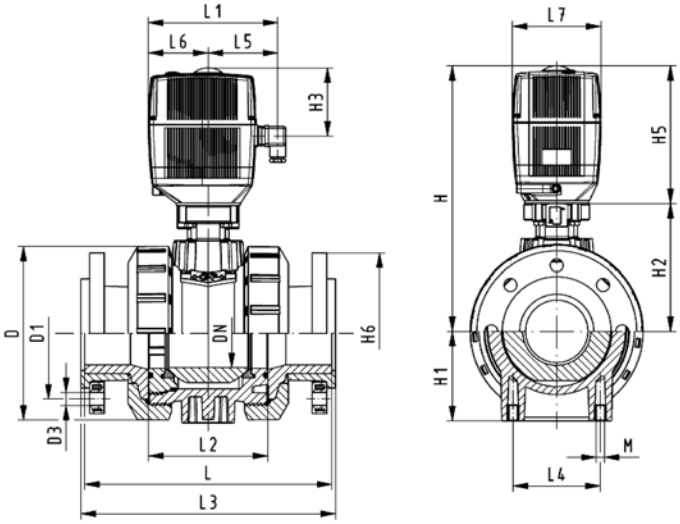

Ball valve type 130 PVC-U 24V
With manual emergency override
With backing flanges PP-st metric

Model:

- Assignment of actuators EA21 (DN10/15-50), EA31 (DN65-100 if available)
- Image and drawing DN65-100 please see **New product ball valve DN65-100**
- For easy installation and removal
- Integrated stainless steel mounting inserts
- Voltage 24 V AC/DC
- Control range 90°<)
- Control time: EA21: 5s/90°<), EA31: 15s/90°<)
- Overall length according to EN 558-1
- Connecting dimensions: ISO 7005, EN 1092, BS 4504, DIN 2501; bolt circle PN 10

Option:

- Individual configuration of the valve (see form)

d [mm]	DN [mm]	PN	kv-value (Δp=1 bar) [l/min]	EPDM Code	FPM Code	kg
New 75	65	10	5000	**199 134 369**	**199 134 379**	8.100
New 90	80	10	7000	**199 134 370**	**199 134 380**	9.900
New 110	100	10	11000	**199 134 371**	**199 134 381**	13.200

d [mm]	D [mm]	H [mm]	H1 [mm]	H2 [mm]	H3 [mm]	H5 [mm]	H6 [mm]	L [mm]	L1 [mm]	L2 [mm]	L3 [mm]	L4 [mm]	L5 [mm]	L6 [mm]
New 75	166	346	85	156	94	190	93	284	180	136	290	70	98	83
New 90	200	358	105	168	94	190	100	300	180	141	310	70	98	83
New 110	238	365	123	175	94	190	110	340	180	164	350	120	98	83

d [mm]	L7 [mm]	L8 [mm]
New 75	122	66
New 90	122	66
New 110	122	66

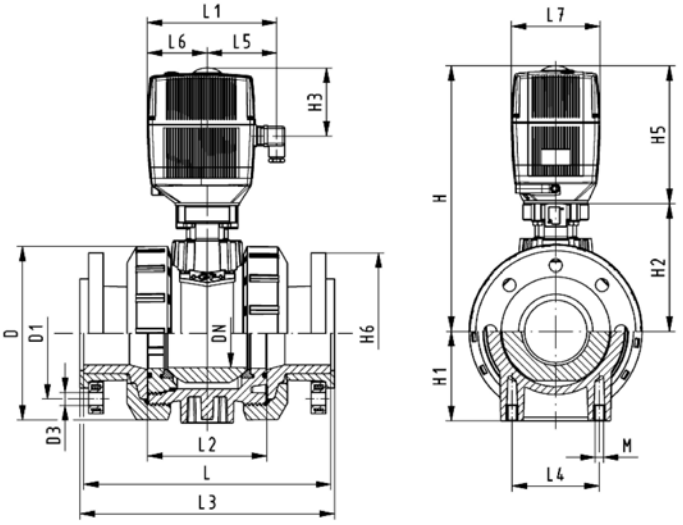

DN10/15 - 50

Ball valve type 134 PVC-U 100-230V
With manual emergency override
With solvent cement sockets Inch BS

Model:

- Assignment of actuators EA21 (DN10/15-50), EA31 (DN65-100 if available)
- Image and drawing DN65-100 please see **New product ball valve DN65-100**
- For easy installation and removal
- Integrated stainless steel mounting inserts
- Voltage 100-230 V, 50-60 Hz
- Control range 90°<)
- Control time: EA21: 5s/90°<), EA31: 15s/90°<)

Option:

- Individual configuration of the valve (see form)

Inch	DN [mm]	PN	kv-value (Δp=1 bar) [l/min]	EPDM Code	FPM Code	kg
⅜	10	10	70	**199 134 002**	**199 134 012**	2.100
½	15	10	185	**199 134 003**	**199 134 013**	2.100
¾	20	10	350	**199 134 004**	**199 134 014**	2.200
1	25	10	700	**199 134 005**	**199 134 015**	2.300
1 ¼	32	10	1000	**199 134 006**	**199 134 016**	2.600
1 ½	40	10	1600	**199 134 007**	**199 134 017**	3.000
2	50	10	3100	**199 134 008**	**199 134 018**	3.800
New 2 ½	65	10	5000	**199 134 009**	**199 134 019**	3.900
New 3	80	10	7000	**199 134 010**	**199 134 020**	4.800
New 4	100	10	11000	**199 134 011**	**199 134 021**	6.200

Inch	D [mm]	H [mm]	H1 [mm]	H2 [mm]	H3 [mm]	H5 [mm]	L [mm]	L1 [mm]	L2 [mm]	L4 [mm]	L5 [mm]	L6 [mm]	L7 [mm]	z [mm]
⅜	50	231	27	64	94	167	92	180	56	25	97	83	122	60
½	50	231	27	64	94	167	95	180	56	25	97	83	122	60
¾	58	240	30	73	94	167	110	180	65	25	97	83	122	69
1	68	240	36	73	94	167	123	180	71	25	97	83	122	75
1 ¼	84	251	44	84	94	167	146	180	85	45	97	83	122	89
1 ½	97	251	51	84	94	167	157	180	89	45	97	83	122	97
2	124	273	64	106	94	167	183	180	101	45	97	83	122	110
New 2 ½	166	347	85	156	94	190	233	180	136	70	98	83	122	144
New 3	200	358	105	168	94	190	254	180	141	70	98	83	122	151
New 4	238	365	123	175	94	190	301	180	164	120	98	83	122	174

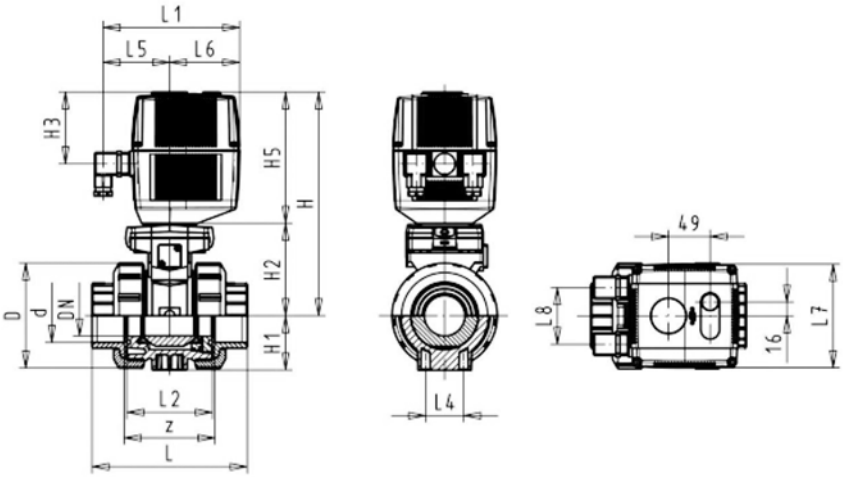

DN10/15 - 50

Ball valve type 134 PVC-U 24V
With manual emergency override
With solvent cement sockets Inch BS

Model:

- Assignment of actuators EA21 (DN10/15-50), EA31 (DN65-100 if available)
- Image and drawing DN65-100 please see **New product ball valve DN65-100**
- For easy installation and removal
- Integrated stainless steel mounting inserts
- Voltage 24 V AC/DC
- Control range 90°<)
- Control time: EA21: 5s/90°<), EA31: 15s/90°<)

Option:

- Individual configuration of the valve (see form)

Inch	DN [mm]	PN	kv-value (Δp=1 bar) [l/min]	EPDM Code	FPM Code	kg
⅜	10	10	70	**199 134 042**	**199 134 052**	2.100
½	15	10	185	**199 134 043**	**199 134 053**	2.100
¾	20	10	350	**199 134 044**	**199 134 054**	2.200
1	25	10	700	**199 134 045**	**199 134 055**	2.300
1 ¼	32	10	1000	**199 134 046**	**199 134 056**	2.600
1 ½	40	10	1600	**199 134 047**	**199 134 057**	3.000
2	50	10	3100	**199 134 048**	**199 134 058**	3.800
New 2 ½	65	10	5000	**199 134 049**	**199 134 059**	3.900
New 3	80	10	7000	**199 134 050**	**199 134 060**	4.800
New 4	100	10	11000	**199 134 051**	**199 134 061**	6.200

Inch	D [mm]	H [mm]	H1 [mm]	H2 [mm]	H3 [mm]	H5 [mm]	L [mm]	L1 [mm]	L2 [mm]	L4 [mm]	L5 [mm]	L6 [mm]	L7 [mm]	z [mm]
⅜	50	231	27	64	94	167	92	180	56	25	97	83	122	60
½	50	231	27	64	94	167	95	180	56	25	97	83	122	60
¾	58	240	30	73	94	167	110	180	65	25	97	83	122	69
1	68	240	36	73	94	167	123	180	71	25	97	83	122	75
1 ¼	84	251	44	84	94	167	146	180	85	45	97	83	122	89
1 ½	97	251	51	84	94	167	157	180	89	45	97	83	122	97
2	124	273	64	106	94	167	183	180	101	45	97	83	122	110
New 2 ½	166	346	85	156	94	190	233	180	136	70	98	83	122	144
New 3	200	358	105	168	94	190	254	180	141	70	98	83	122	151
New 4	238	365	123	175	94	190	301	180	164	120	98	83	122	174

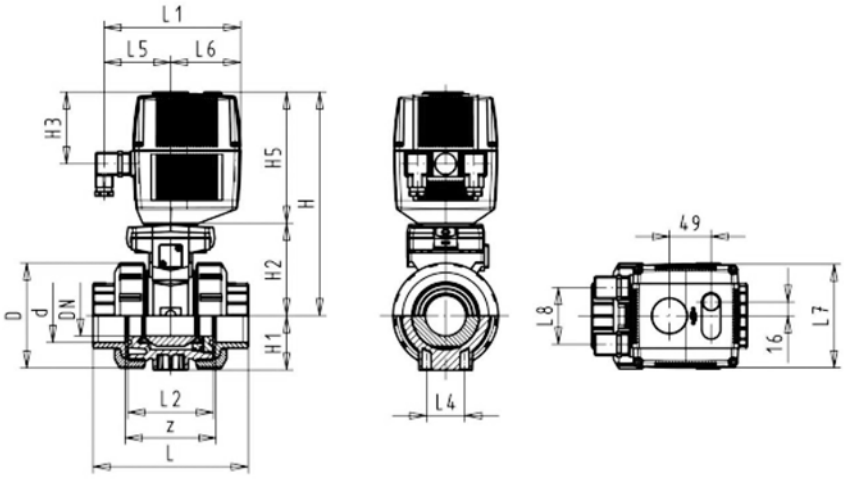

Copiable
Configurator GF Ball Valve Type 546 PVC-U

You will find a large selection of different versions in our range of products. New system elements also provide you with new opportunities for use. In order for us to supply exactly the ball valve you need for your application, we put together a selection menu for you (the maximum working pressure of the whole valve is determined by the maximum permissible nominal pressure
of the connecting part).

Ball valve
A01 Ball valve 546

Material
B01 PVC-U

Dimension

C05	d 16	DN 10	3/8"
C06	d 20	DN 15	1/2"
C07	d 25	DN 20	3/4"
C08	d 32	DN 25	1"
C09	d 40	DN 32	1 1/4"
C10	d 50	DN 40	1 1/2"
C11	d 63	DN 50	2"
C12	d 75	DN 65	2 1/2"
C13	d 90	DN 80	3"
C14	d 110	DN 100	4"
C15	d 160	DN 150	6"

Version
D01 standard, PTFE ball seal
D02 oilfree, PTFE ball seal (only with specific connecting parts)
D03 silicon-free, PTFE ball seal for inch ASTM (only with specific connecting parts)
D04 silicon-free, PVDF ball seal for metric (only with specific connecting parts)

Seals
E01 EPDM seals
E02 FPM seals
E03 FFPM (KALREZ©) seals

Threaded inserts
F01 without threaded inserts
F02 with threaded inserts

Connecting parts
G01 PVC-U Cement socket metric
G03 PVC-U Cement socket inch ASTM
G04 PVC-U Cement socket inch BS
G05 PVC-U Cement spigot metric
G06 PVC-U Threaded socket Rp
G07 PVC-U Threaded socket Rp reinforced (DN10-50)
G09 PVC-U Threaded socket NPT
G30 PP-H Fusion socket metric
G32 PP-H Socket fusion spigot metric
G33 PP-H Threaded socket Rp
G34 PP-H Threaded socket NPT reinforced
G35 PP-H Butt fusion spigot SDR 11 metric IR-PLUS
G36 PP-H Butt fusion spigot SDR 17.6 metric (limited dimension range)
G37 PP-H Butt fusion spigot long SDR11 metric
G40 PE-100 Fusion socket metric
G41 PE-100 Butt fusion spigot SDR11 metric
G42 PE-100 Butt fusion spigot SDR17.6 metric (limited dimension range)
G43 PE-100 Butt fusion spigot long SDR11 metric
G44 PE-100 Butt fusion spigot long SDR17.6 metric (DN65-100)
G60 Fixed flange PVC-U serrated metric
G61 Fixed flange PVC-U flat metric
G70 Backing flange PVC-U metric
G71 Backing flange PVC-U inch ANSI
G72 Backing flange PP-steel metric
G73 Backing flange PP-steel ANSI
G78 Backing flange PVC-U JIS (DN65-100)
G80 PVC-U Valve end blank

Multi-functional module
I01 No multi-functional module
I02 Empty module
I03 Module with 2 limit switches Ag, Ni
I04 Module with 2 limit switches Au
I05 Module with 2 inductive switches Namur
I06 Module with 2 inductive switches PNP
I07 Module with 2 inductive switches NPN

Handle
K01 Standard handle red
K02 Standard handle black
K11 Multi-functional handle red

Mounting plate
L01 without mounting plate
L02 with mounting plate

A01	B01	C	D	E	F	G	G	I	K	L
						left	right			

Copiable
GF ball valve type 546 with electric Actuator

It's easy to actuate the type 546:
With the configurator, you have a choice of new electric actuators, the EA11 for standard applications and the EA21 with modular design and accessories, for practically and type of operation.

We supply what you put together.

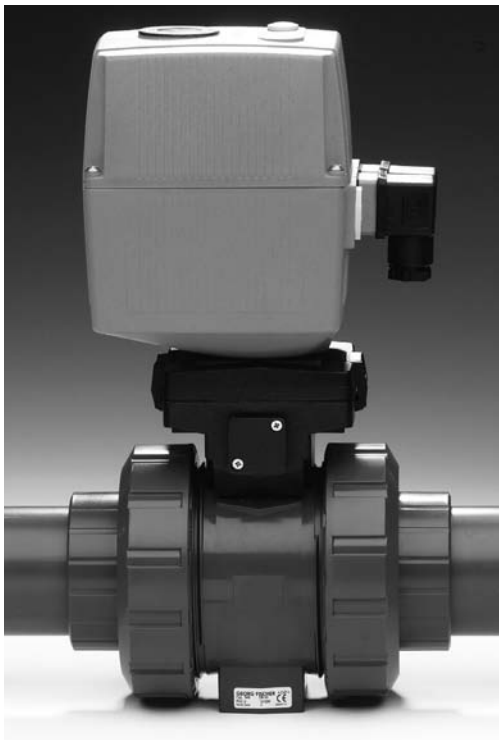

Electric Actuator EA11
T01 EA11 24 V
T02 EA11 100–230 V

Accessories EA11
U01 No accessories
U02 2 limit switches Ag, Ni
U03 Heating element
U04 Fail-safe return
U05 2 limit switches Ag, Ni normally open

Electric Actuator EA21/31
T03 EA21/31 24 V
T04 EA21/31 100–230 V

Accessories EA21
W01 No accessories
W02 Heating element
W03 Cycle time module
W04 Cycle time monitoring
W05 Cycles monitoring
W06 Motor current monitoring
W07 2 limit switches Ag, Ni
W08 2 limit switches Gold
W09 2 limit switches NPN
W10 2 limit switches PNP
W11 Positioner
W12 Electric position indicator
W14 Fail-safe return unit
W15 Switch intermediate position
W27 2 limit switches Ag, Ni normally open with connector
W31 Positioner PE25 with galv. separation

T	U	T	W	W	W	W	W	W

Ball valves pneumatic

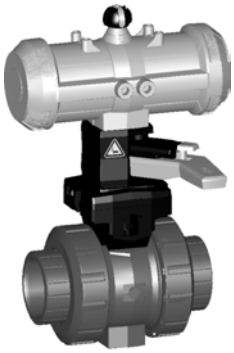

DN10/15 - 50

Ball valve type 230 PVC-U FC (Fail safe to close)
With manual override
With solvent cement sockets metric

Model:

- Built on with pneumatic actuator PA11/21
- For easy installation and removal
- Integrated stainless steel mounting inserts
- Control time 90°<) 1-2 s

Option:

- Individual configuration of the valve (see form)

d [mm]	DN [mm]	PN	kv-value (Δp=1 bar) [l/min]	EPDM Code	FPM Code	kg
16	10	10	70	**199 230 002**	**199 230 012**	1.459
20	15	10	185	**199 230 003**	**199 230 013**	1.459
25	20	10	350	**199 230 004**	**199 230 014**	1.576
32	25	10	700	**199 230 005**	**199 230 015**	1.700
40	32	10	1000	**199 230 006**	**199 230 016**	2.751
50	40	10	1600	**199 230 007**	**199 230 017**	3.073
63	50	10	3100	**199 230 008**	**199 230 018**	3.931

d [mm]	D [mm]	H [mm]	H1 [mm]	H2 [mm]	H3 [mm]	H4 [mm]	H5 [mm]	L [mm]	L1 [mm]	L2 [mm]	L4 [mm]	L5 [mm]	L6 [mm]	L7 [mm]	z [mm]
16	50	230	27	62	168	40	97	92	194	56	25	261	76	48	64
20	50	230	27	62	168	40	97	95	194	56	25	261	76	48	64
25	58	239	30	71	168	40	97	110	194	65	25	261	76	48	72
32	68	239	36	71	168	40	97	123	194	71	25	261	76	48	79
40	84	271	44	84	187	51	115	146	224	85	45	305	95	59	94
50	97	271	51	84	187	51	115	157	224	89	45	305	95	59	95
63	124	293	64	106	187	51	115	183	224	101	45	305	95	59	107

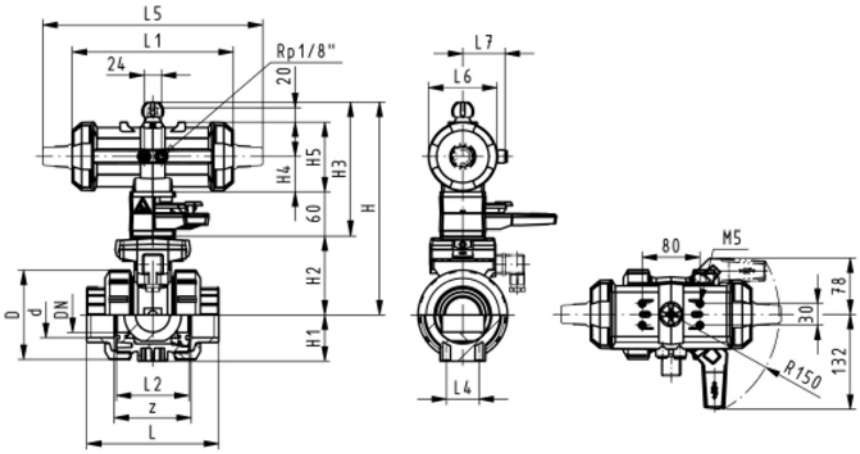

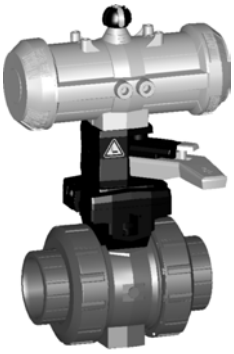

DN10/15 - 50

Ball valve type 230 PVC-U FO (Fail safe to open)
With manual override
With solvent cement sockets metric

Model:

- Built on with pneumatic actuator PA11/21
- For easy installation and removal
- Integrated stainless steel mounting inserts
- Control time 90°<) 1-2 s

Option:

- Individual configuration of the valve (see form)

d [mm]	DN [mm]	PN	kv-value (Δp=1 bar) [l/min]	EPDM Code	FPM Code	kg
16	10	10	70	**199 230 042**	**199 230 052**	1.459
20	15	10	185	**199 230 043**	**199 230 053**	1.459
25	20	10	350	**199 230 044**	**199 230 054**	1.576
32	25	10	700	**199 230 045**	**199 230 055**	1.700
40	32	10	1000	**199 230 046**	**199 230 056**	2.751
50	40	10	1600	**199 230 047**	**199 230 057**	3.073
63	50	10	3100	**199 230 048**	**199 230 058**	3.931

d [mm]	D [mm]	H [mm]	H1 [mm]	H2 [mm]	H3 [mm]	H4 [mm]	H5 [mm]	L [mm]	L1 [mm]	L2 [mm]	L4 [mm]	L5 [mm]	L6 [mm]	L7 [mm]	z [mm]
16	50	230	27	62	168	40	97	92	194	56	25	261	76	48	64
20	50	230	27	62	168	40	97	95	194	56	25	261	76	48	64
25	58	239	30	71	168	40	97	110	194	65	25	261	76	48	72
32	68	239	36	71	168	40	97	123	194	71	25	261	76	48	79
40	84	271	44	84	187	51	115	146	224	85	45	305	95	59	94
50	97	271	51	84	187	51	115	157	224	89	45	305	95	59	95
63	124	293	64	106	187	51	115	183	224	101	45	305	95	59	107

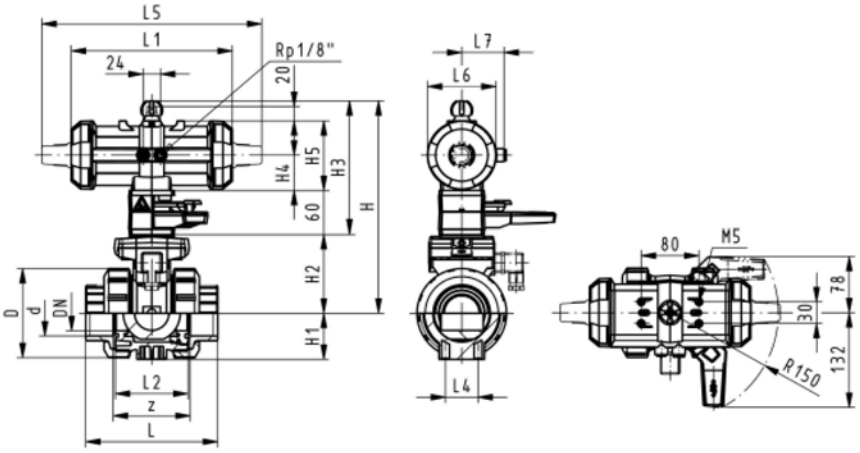

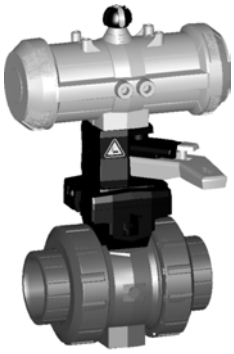

DN10/15 - 50

Ball valve type 230 PVC-U DA (Double acting)
With manual override
With solvent cement sockets metric

Model:

- Built on with pneumatic actuator PA11/21
- For easy installation and removal
- Integrated stainless steel mounting inserts
- Control time 90°<) 1-2 s

Option:

- Individual configuration of the valve (see form)

d [mm]	DN [mm]	PN	kv-value (Δp=1 bar) [l/min]	EPDM Code	FPM Code	kg
16	10	10	70	**199 230 082**	**199 230 092**	1.459
20	15	10	185	**199 230 083**	**199 230 093**	1.459
25	20	10	350	**199 230 084**	**199 230 094**	1.576
32	25	10	700	**199 230 085**	**199 230 095**	1.700
40	32	10	1000	**199 230 086**	**199 230 096**	2.751
50	40	10	1600	**199 230 087**	**199 230 097**	3.073
63	50	10	3100	**199 230 088**	**199 230 098**	3.931

d [mm]	D [mm]	H [mm]	H1 [mm]	H2 [mm]	H3 [mm]	H4 [mm]	H5 [mm]	L [mm]	L1 [mm]	L2 [mm]	L4 [mm]	L5 [mm]	L6 [mm]	L7 [mm]	z [mm]
16	50	230	27	62	168	40	97	92	194	56	25	261	76	48	64
20	50	230	27	62	168	40	97	95	194	56	25	261	76	48	64
25	58	239	30	71	168	40	97	110	194	65	25	261	76	48	72
32	68	239	36	71	168	40	97	123	194	71	25	261	76	48	79
40	84	271	44	84	187	51	115	146	224	85	45	305	95	59	94
50	97	271	51	84	187	51	115	157	224	89	45	305	95	59	95
63	124	293	64	106	187	51	115	183	224	101	45	305	95	59	107

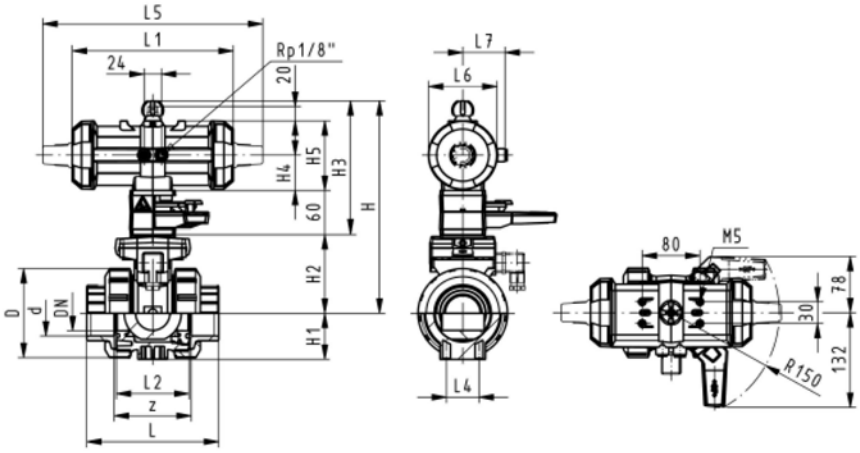

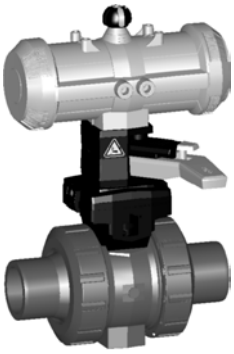

DN10/15 - 50

Ball valve type 230 PVC-U FC (Fail safe to close)
With manual override
With solvent cement spigots metric

Model:

- Built on with pneumatic actuator PA11/21
- For easy installation and removal
- Integrated stainless steel mounting inserts
- Control time 90°<) 1-2 s

Option:

- Individual configuration of the valve (see form)

d [mm]	DN [mm]	PN	kv-value (Δp=1 bar) [l/min]	EPDM Code	FPM Code	kg
16	10	10	70	**199 230 022**	**199 230 032**	1.459
20	15	10	185	**199 230 023**	**199 230 033**	1.459
25	20	10	350	**199 230 024**	**199 230 034**	1.576
32	25	10	700	**199 230 025**	**199 230 035**	1.700
40	32	10	1000	**199 230 026**	**199 230 036**	2.751
50	40	10	1600	**199 230 027**	**199 230 037**	3.073
63	50	10	3100	**199 230 028**	**199 230 038**	3.931

d [mm]	D [mm]	H [mm]	H1 [mm]	H2 [mm]	H3 [mm]	H4 [mm]	H5 [mm]	L [mm]	L1 [mm]	L2 [mm]	L3 [mm]	L4 [mm]	L5 [mm]	L6 [mm]	L7 [mm]
16	50	230	27	62	168	40	97	114	194	56	130	25	261	76	48
20	50	230	27	62	168	40	97	124	194	56	130	25	261	76	48
25	58	239	30	71	168	40	97	144	194	65	150	25	261	76	48
32	68	239	36	71	168	40	97	154	194	71	160	25	261	76	48
40	84	271	44	84	187	51	115	174	224	85	180	45	305	95	59
50	97	271	51	84	187	51	115	194	224	89	200	45	305	95	59
63	124	293	64	106	187	51	115	224	224	101	230	45	305	95	59

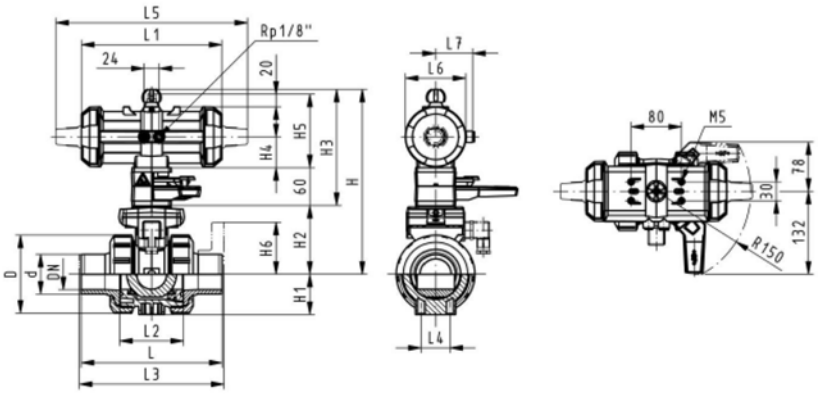

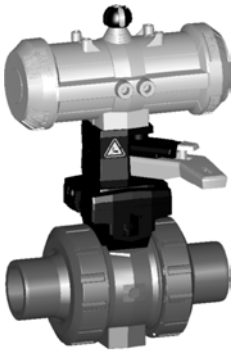

DN10/15 - 50

Ball valve type 230 PVC-U FO (Fail safe to open)
With manual override
With solvent cement spigots metric

Model:

- Built on with pneumatic actuator PA11/21
- For easy installation and removal
- Integrated stainless steel mounting inserts
- Control time 90°<) 1-2 s

Option:

- Individual configuration of the valve (see form)

d [mm]	DN [mm]	PN	kv-value (Δp=1 bar) [l/min]	EPDM Code	FPM Code	kg
16	10	10	70	**199 230 062**	**199 230 072**	1.459
20	15	10	185	**199 230 063**	**199 230 073**	1.459
25	20	10	350	**199 230 064**	**199 230 074**	1.576
32	25	10	700	**199 230 065**	**199 230 075**	1.700
40	32	10	1000	**199 230 066**	**199 230 076**	2.751
50	40	10	1600	**199 230 067**	**199 230 077**	3.073
63	50	10	3100	**199 230 068**	**199 230 078**	3.931

d [mm]	D [mm]	H [mm]	H1 [mm]	H2 [mm]	H3 [mm]	H4 [mm]	H5 [mm]	L [mm]	L1 [mm]	L2 [mm]	L3 [mm]	L4 [mm]	L5 [mm]	L6 [mm]	L7 [mm]
16	50	230	27	62	168	40	97	114	194	56	130	25	261	76	48
20	50	230	27	62	168	40	97	124	194	56	130	25	261	76	48
25	58	239	30	71	168	40	97	144	194	65	150	25	261	76	48
32	68	239	36	71	168	40	97	154	194	71	160	25	261	76	48
40	84	271	44	84	187	51	115	174	224	85	180	45	305	95	59
50	97	271	51	84	187	51	115	194	224	89	200	45	305	95	59
63	124	293	64	106	187	51	115	224	224	101	230	45	305	95	59

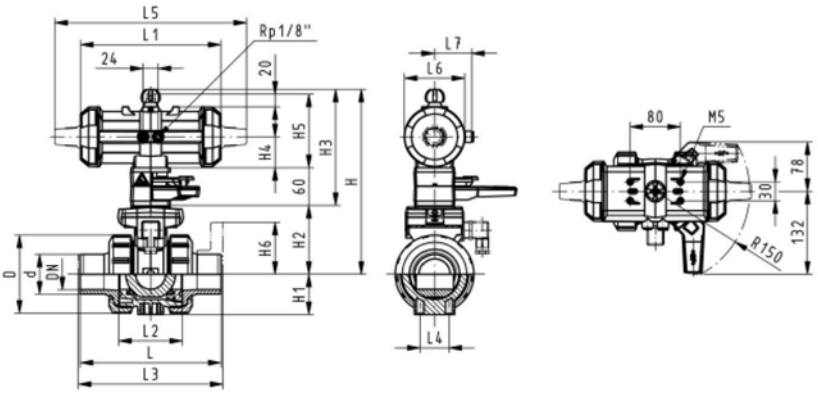

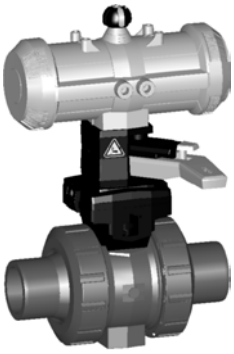

DN10/15 - 50

Ball valve type 230 PVC-U DA (Double acting)
With manual override
With solvent cement spigots metric

Model:

- Built on with pneumatic actuator PA11/21
- For easy installation and removal
- Integrated stainless steel mounting inserts
- Control time 90°<) 1-2 s

Option:

- Individual configuration of the valve (see form)

d [mm]	DN [mm]	PN	kv-value (Δp=1 bar) [l/min]	EPDM Code	FPM Code	kg
16	10	10	70	**199 230 102**	**199 230 112**	1.459
20	15	10	185	**199 230 103**	**199 230 113**	1.459
25	20	10	350	**199 230 104**	**199 230 114**	1.576
32	25	10	700	**199 230 105**	**199 230 115**	1.700
40	32	10	1000	**199 230 106**	**199 230 116**	2.751
50	40	10	1600	**199 230 107**	**199 230 117**	3.073
63	50	10	3100	**199 230 108**	**199 230 118**	3.931

d [mm]	D [mm]	H [mm]	H1 [mm]	H2 [mm]	H3 [mm]	H4 [mm]	H5 [mm]	L [mm]	L1 [mm]	L2 [mm]	L3 [mm]	L4 [mm]	L5 [mm]	L6 [mm]	L7 [mm]
16	50	230	27	62	168	40	97	114	194	56	130	25	261	76	48
20	50	230	27	62	168	40	97	124	194	56	130	25	261	76	48
25	58	239	30	71	168	40	97	144	194	65	150	25	261	76	48
32	68	239	36	71	168	40	97	154	194	71	160	25	261	76	48
40	84	271	44	84	187	51	115	174	224	85	180	45	305	95	59
50	97	271	51	84	187	51	115	194	224	89	200	45	305	95	59
63	124	293	64	106	187	51	115	224	224	101	230	45	305	95	59

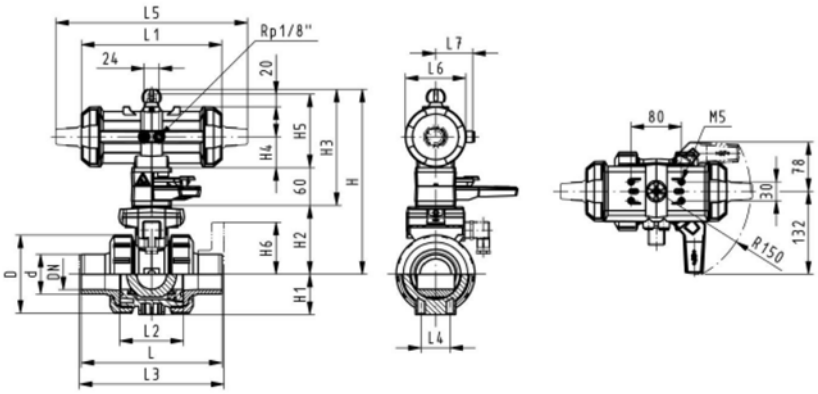

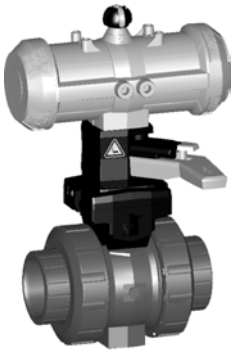

DN10/15 - 50

Ball valve type 230 PVC-U FC (Fail safe to close)
With manual override
With threaded sockets Rp

Model:

- Built on with pneumatic actuator PA11/21
- For easy installation and removal
- Integrated stainless steel mounting inserts
- Control time 90°<) 1-2 s

Option:

- Individual configuration of the valve (see form)

Rp [inch]	DN [mm]	PN	kv-value (Δp=1 bar) [l/min]	EPDM Code	FPM Code	kg
⅜	10	10	70	**199 230 362**	**199 230 372**	1.500
½	15	10	185	**199 230 363**	**199 230 373**	1.500
¾	20	10	350	**199 230 364**	**199 230 374**	1.600
1	25	10	700	**199 230 365**	**199 230 375**	1.700
1 ¼	32	10	1000	**199 230 366**	**199 230 376**	2.800
1 ½	40	10	1600	**199 230 367**	**199 230 377**	3.100
2	50	10	3100	**199 230 368**	**199 230 378**	4.000

Rp [inch]	D [mm]	H [mm]	H1 [mm]	H2 [mm]	H3 [mm]	H4 [mm]	H5 [mm]	L [mm]	L1 [mm]	L2 [mm]	L4 [mm]	L5 [mm]	L6 [mm]	L7 [mm]	z [mm]
⅜	50	230	27	62	168	40	97	92	194	56	25	261	76	48	64
½	50	230	27	62	168	40	97	95	194	56	25	261	76	48	64
¾	58	239	30	71	168	40	97	110	194	65	25	261	76	48	72
1	68	239	36	71	168	40	97	123	194	71	25	261	76	48	79
1 ¼	84	271	44	84	187	51	115	146	224	85	45	305	95	59	94
1 ½	97	271	51	84	187	51	115	157	224	89	45	305	95	59	95
2	124	293	64	106	187	51	115	183	224	101	45	305	95	59	107

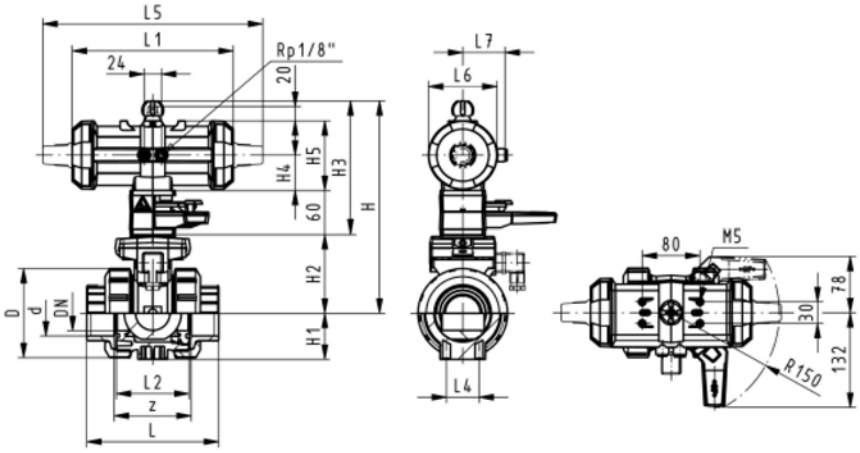

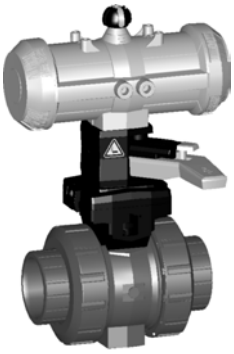

DN10/15 - 50

Ball valve type 230 PVC-U FO (Fail safe to open)
With manual override
With threaded sockets Rp

Model:

- Built on with pneumatic actuator PA11/21
- For easy installation and removal
- Integrated stainless steel mounting inserts
- Control time 90°<) 1-2 s

Option:

- Individual configuration of the valve (see form)

Rp [inch]	DN [mm]	PN	kv-value (Δp=1 bar) [l/min]	EPDM Code	FPM Code	kg
⅜	10	10	70	**199 230 382**	**199 230 392**	1.500
½	15	10	185	**199 230 383**	**199 230 393**	1.500
¾	20	10	350	**199 230 384**	**199 230 394**	1.600
1	25	10	700	**199 230 385**	**199 230 395**	1.700
1 ¼	32	10	1000	**199 230 386**	**199 230 396**	2.800
1 ½	40	10	1600	**199 230 387**	**199 230 397**	3.100
2	50	10	3100	**199 230 388**	**199 230 398**	4.000

Rp [inch]	D [mm]	H [mm]	H1 [mm]	H2 [mm]	H3 [mm]	H4 [mm]	H5 [mm]	L [mm]	L1 [mm]	L2 [mm]	L4 [mm]	L5 [mm]	L6 [mm]	L7 [mm]	z [mm]
⅜	50	230	27	62	168	40	97	92	194	56	25	261	76	48	64
½	50	230	27	62	168	40	97	95	194	56	25	261	76	48	64
¾	58	239	30	71	168	40	97	110	194	65	25	261	76	48	72
1	68	239	36	71	168	40	97	123	194	71	25	261	76	48	79
1 ¼	84	271	44	84	187	51	115	146	224	85	45	305	95	59	94
1 ½	97	271	51	84	187	51	115	157	224	89	45	305	95	59	95
2	124	293	64	106	187	51	115	183	224	101	45	305	95	59	107

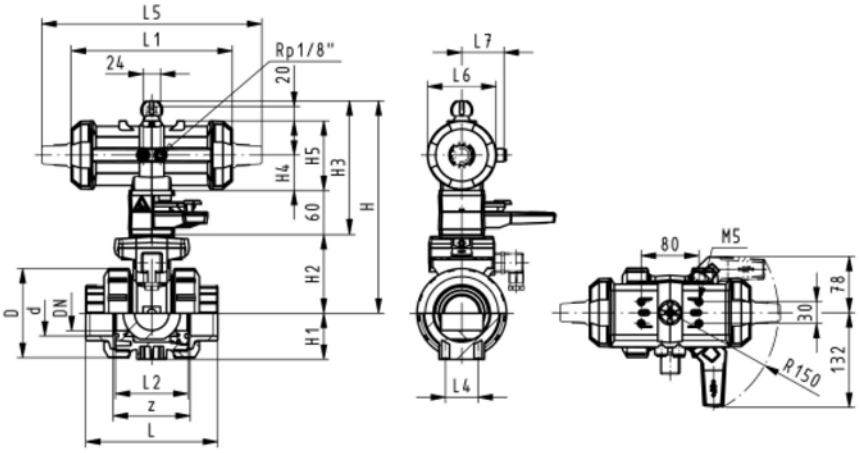

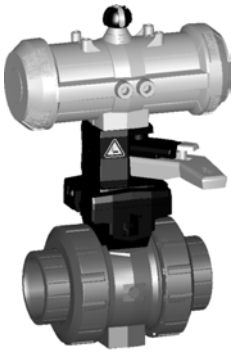

DN10/15 - 50

Ball valve type 230 PVC-U DA (Double acting)
With manual override
With threaded sockets Rp

Model:

- Built on with pneumatic actuator PA11/21
- For easy installation and removal
- Integrated stainless steel mounting inserts
- Control time 90°<) 1-2 s

Option:

- Individual configuration of the valve (see form)

Rp [inch]	DN [mm]	PN	kv-value (Δp=1 bar) [l/min]	EPDM Code	FPM Code	kg
⅜	10	10	70	**199 230 642**	**199 230 652**	1.500
½	15	10	185	**199 230 643**	**199 230 653**	1.500
¾	20	10	350	**199 230 644**	**199 230 654**	1.600
1	25	10	700	**199 230 645**	**199 230 655**	1.700
1 ¼	32	10	1000	**199 230 646**	**199 230 656**	2.800
1 ½	40	10	1600	**199 230 647**	**199 230 657**	3.100
2	50	10	3100	**199 230 648**	**199 230 658**	4.000

Rp [inch]	D [mm]	H [mm]	H1 [mm]	H2 [mm]	H3 [mm]	H4 [mm]	H5 [mm]	L [mm]	L1 [mm]	L2 [mm]	L4 [mm]	L5 [mm]	L6 [mm]	L7 [mm]	z [mm]
⅜	50	230	27	62	168	40	97	92	194	56	25	261	76	48	64
½	50	230	27	62	168	40	97	95	194	56	25	261	76	48	64
¾	58	239	30	71	168	40	97	110	194	65	25	261	76	48	72
1	68	239	36	71	168	40	97	123	194	71	25	261	76	48	79
1 ¼	84	271	44	84	187	51	115	146	224	85	45	305	95	59	94
1 ½	97	271	51	84	187	51	115	157	224	89	45	305	95	59	95
2	124	293	64	106	187	51	115	183	224	101	45	305	95	59	107

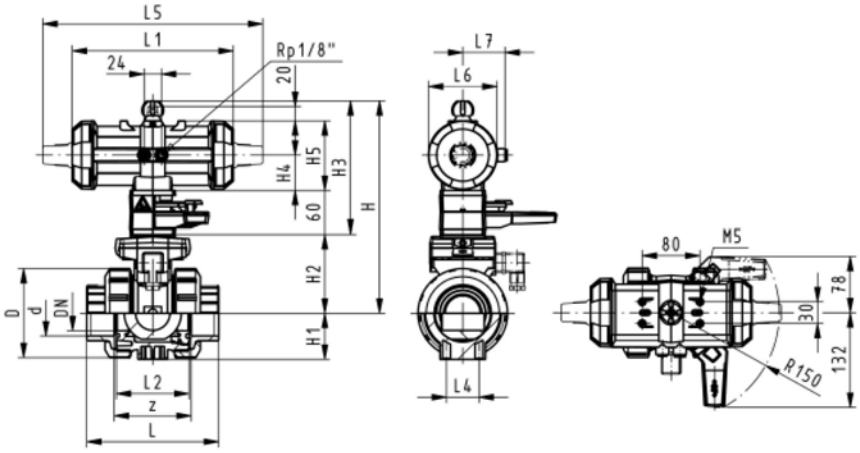

DN10/15 - 50

Ball valve type 230 PVC-U FC (Fail safe to close)
With manual override
With fixed flanges serrated metric

Model:

- Built on with pneumatic actuator PA11/21
- For easy installation and removal
- Integrated stainless steel mounting inserts
- Control time 90°<) 1-2 s
- Overall length according to EN 558-1
- Connecting dimensions: ISO 7005 / EN 1092 / DIN 2501 PN10 / BS4504

Option:

- Individual configuration of the valve (see form)

d [mm]	DN [mm]	Inch	PN	kv-value (Δp=1 bar) [l/min]	EPDM Code	FPM Code	kg
20	15	½	10	185	**199 230 243**	**199 230 253**	1.700
25	20	¾	10	350	**199 230 244**	**199 230 254**	1.900
32	25	1	10	700	**199 230 245**	**199 230 255**	2.100
40	32	1 ¼	10	1000	**199 230 246**	**199 230 256**	3.400
50	40	1 ½	10	1600	**199 230 247**	**199 230 257**	3.800
63	50	2	10	3100	**199 230 248**	**199 230 258**	4.900

d [mm]	D [mm]	H [mm]	H1 [mm]	H2 [mm]	H3 [mm]	H4 [mm]	H5 [mm]	H6 [mm]	L [mm]	L1 [mm]	L2 [mm]	L3 [mm]	L4 [mm]	L5 [mm]	L6 [mm]
20	50	230	27	62	168	40	97	48	124	194	56	130	25	261	76
25	58	239	30	71	168	40	97	53	144	194	65	150	25	261	76
32	68	239	36	71	168	40	97	58	154	194	71	160	25	261	76
40	84	271	44	84	187	51	115	70	174	224	85	180	45	305	95
50	97	271	51	84	187	51	115	75	194	224	89	200	45	305	95
63	124	293	64	106	187	51	115	83	224	224	101	230	45	305	95

d [mm]	L7 [mm]
20	48
25	48
32	48
40	59
50	59
63	59

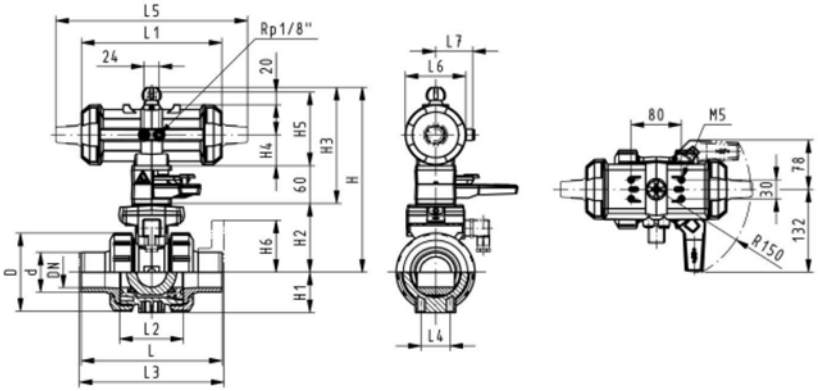

DN10/15 - 50

Ball valve type 230 PVC-U FO (Fail safe to open)
With manual override
With fixed flanges serrated metric

Model:

- Built on with pneumatic actuator PA11/21
- For easy installation and removal
- Integrated stainless steel mounting inserts
- Control time 90°<) 1-2 s
- Overall length according to EN 558-1
- Connecting dimensions: ISO 7005 / EN 1092 / DIN 2501 PN10 / BS4504

Option:

- Individual configuration of the valve (see form)

d [mm]	DN [mm]	Inch	PN	kv-value (Δp=1 bar) [l/min]	EPDM Code	FPM Code	kg
20	15	½	10	185	**199 230 263**	**199 230 273**	1.700
25	20	¾	10	350	**199 230 264**	**199 230 274**	1.900
32	25	1	10	700	**199 230 265**	**199 230 275**	2.100
40	32	1 ¼	10	1000	**199 230 266**	**199 230 276**	3.400
50	40	1 ½	10	1600	**199 230 267**	**199 230 277**	3.800
63	50	2	10	3100	**199 230 268**	**199 230 278**	4.900

d [mm]	D [mm]	H [mm]	H1 [mm]	H2 [mm]	H3 [mm]	H4 [mm]	H5 [mm]	H6 [mm]	L [mm]	L1 [mm]	L2 [mm]	L3 [mm]	L4 [mm]	L5 [mm]	L6 [mm]
20	50	230	27	62	168	40	97	48	124	194	56	130	25	261	76
25	58	239	30	71	168	40	97	53	144	194	65	150	25	261	76
32	68	239	36	71	168	40	97	58	154	194	71	160	25	261	76
40	84	271	44	84	187	51	115	70	174	224	85	180	45	305	95
50	97	271	51	84	187	51	115	75	194	224	89	200	45	305	95
63	124	293	64	106	187	51	115	83	224	224	101	230	45	305	95

d [mm]	L7 [mm]
20	48
25	48
32	48
40	59
50	59
63	59

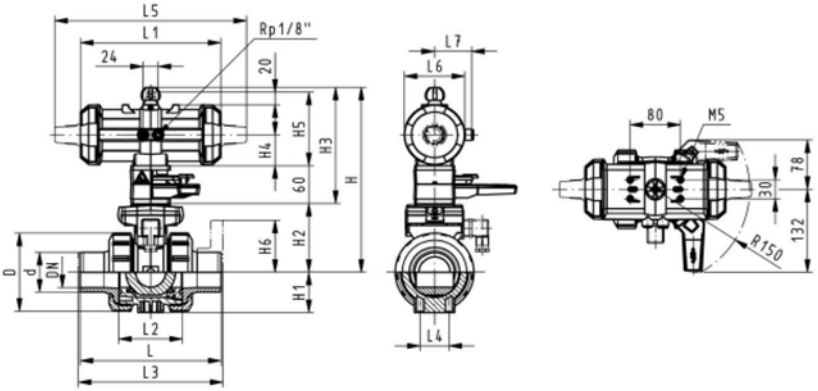

DN10/15 - 50

Ball valve type 230 PVC-U DA (Double acting)
With manual override
With fixed flanges serrated metric

Model:

- Built on with pneumatic actuator PA11/21
- For easy installation and removal
- Integrated stainless steel mounting inserts
- Control time 90°<) 1-2 s
- Overall length according to EN 558-1
- Connecting dimensions: ISO 7005 / EN 1092 / DIN 2501 PN10 / BS4504

Option:

- Individual configuration of the valve (see form)

d [mm]	DN [mm]	Inch	PN	kv-value (Δp=1 bar) [l/min]	EPDM Code	FPM Code	kg
20	15	½	10	185	**199 230 283**	**199 230 293**	1.700
25	20	¾	10	350	**199 230 284**	**199 230 294**	1.900
32	25	1	10	700	**199 230 285**	**199 230 295**	2.100
40	32	1 ¼	10	1000	**199 230 286**	**199 230 296**	3.400
50	40	1 ½	10	1600	**199 230 287**	**199 230 297**	3.800
63	50	2	10	3100	**199 230 288**	**199 230 298**	4.900

d [mm]	D [mm]	H [mm]	H1 [mm]	H2 [mm]	H3 [mm]	H4 [mm]	H5 [mm]	H6 [mm]	L [mm]	L1 [mm]	L2 [mm]	L3 [mm]	L4 [mm]	L5 [mm]	L6 [mm]
20	50	230	27	62	168	40	97	48	124	194	56	130	25	261	76
25	58	239	30	71	168	40	97	53	144	194	65	150	25	261	76
32	68	239	36	71	168	40	97	58	154	194	71	160	25	261	76
40	84	271	44	84	187	51	115	70	174	224	85	180	45	305	95
50	97	271	51	84	187	51	115	75	194	224	89	200	45	305	95
63	124	293	64	106	187	51	115	83	224	224	101	230	45	305	95

d [mm]	L7 [mm]
20	48
25	48
32	48
40	59
50	59
63	59

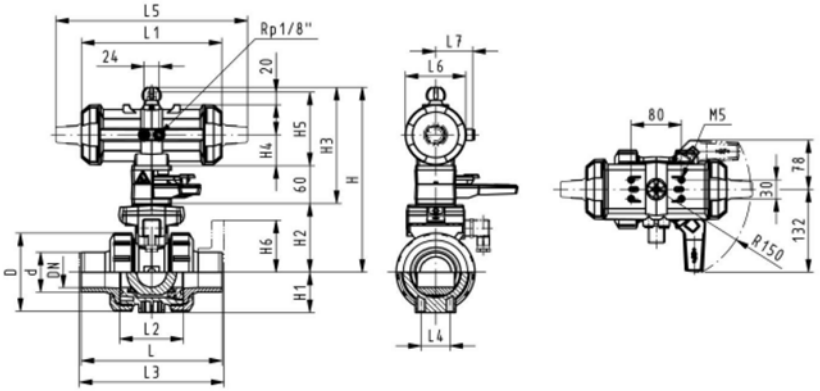

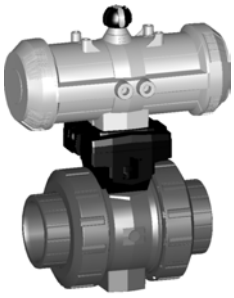

DN10/15 - 50

Ball valve type 230 PVC-U FC (Fail safe to close)
Without manual override
With solvent cement sockets metric

Model:

- Assignment of actuators PA11 (DN10/15-25), PA21 (DN32-50), PA30 (DN65), PA35 (DN80), PA40 (DN100)
- Image and drawing DN65-100 please see **New product ball valve DN65-100**
- For easy installation and removal
- Integrated stainless steel mounting inserts
- Control time 90°<) 1-2 s

Option:

- Individual configuration of the valve (see form)

d [mm]	DN [mm]	PN	kv-value (Δp=1 bar) [l/min]	EPDM Code	FPM Code	kg
16	10	10	70	**199 230 122**	**199 230 132**	1.159
20	15	10	185	**199 230 123**	**199 230 133**	1.159
25	20	10	350	**199 230 124**	**199 230 134**	1.276
32	25	10	700	**199 230 125**	**199 230 135**	1.400
40	32	10	1000	**199 230 126**	**199 230 136**	2.451
50	40	10	1600	**199 230 127**	**199 230 137**	2.773
63	50	10	3100	**199 230 128**	**199 230 138**	3.631
New 75	65	10	5000	**199 230 129**	**199 230 139**	4.300
New 90	80	10	7000	**199 230 130**	**199 230 140**	5.200
New 110	100	10	11000	**199 230 131**	**199 230 141**	7.700

d [mm]	D [mm]	H [mm]	H1 [mm]	H2 [mm]	H4 [mm]	H5 [mm]	L [mm]	L1 [mm]	L2 [mm]	L4 [mm]	L5 [mm]	L6 [mm]	L7 [mm]	z [mm]
16	50	167	27	62	40	97	92	194	56	25	261	76	48	64
20	50	167	27	62	40	97	95	194	56	25	261	76	48	64
25	58	176	30	71	40	97	110	194	65	25	261	76	48	72
32	68	176	36	71	40	97	123	194	71	25	261	76	48	79
40	84	210	44	84	51	115	146	224	85	45	305	95	59	94
50	97	210	51	84	51	115	157	224	89	45	305	95	59	95
63	124	232	64	106	51	115	183	224	101	45	305	95	59	107
New 75	166	262	85	156		70	233	218	136	70	276	65		144
New 90	200	281	105	168		78	254	259	141	70	341	72		151
New 110	238	292	123	175		86	301	287	164	120	369	80		174

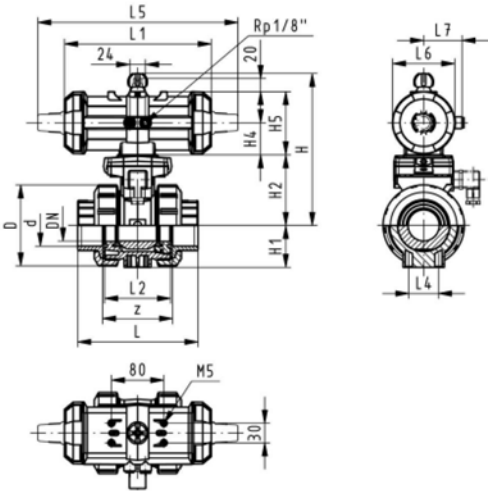

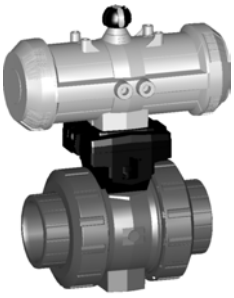

DN10/15 - 50

Ball valve type 230 PVC-U FO (Fail safe to open)
Without manual override
With solvent cement sockets metric

Model:

- Assignment of actuators PA11 (DN10/15-25), PA21 (DN32-50), PA30 (DN65), PA35 (DN80), PA40 (DN100)
- Image and drawing DN65-100 please see **New product ball valve DN65-100**
- For easy installation and removal
- Integrated stainless steel mounting inserts
- Control time 90°<) 1-2 s

Option:

- Individual configuration of the valve (see form)

d [mm]	DN [mm]	PN	kv-value (Δp=1 bar) [l/min]	EPDM Code	FPM Code	kg
16	10	10	70	**199 230 162**	**199 230 172**	1.159
20	15	10	185	**199 230 163**	**199 230 173**	1.159
25	20	10	350	**199 230 164**	**199 230 174**	1.276
32	25	10	700	**199 230 165**	**199 230 175**	1.400
40	32	10	1000	**199 230 166**	**199 230 176**	2.451
50	40	10	1600	**199 230 167**	**199 230 177**	2.773
63	50	10	3100	**199 230 168**	**199 230 178**	3.631
New 75	65	10	5000	**199 230 169**	**199 230 179**	4.300
New 90	80	10	7000	**199 230 170**	**199 230 180**	5.200
New 110	100	10	11000	**199 230 171**	**199 230 181**	7.700

d [mm]	D [mm]	H [mm]	H1 [mm]	H2 [mm]	H4 [mm]	H5 [mm]	L [mm]	L1 [mm]	L2 [mm]	L4 [mm]	L5 [mm]	L6 [mm]	L7 [mm]	z [mm]
16	50	167	27	62	40	97	92	194	56	25	261	76	48	64
20	50	167	27	62	40	97	95	194	56	25	261	76	48	64
25	58	176	30	71	40	97	110	194	65	25	261	76	48	72
32	68	176	36	71	40	97	123	194	71	25	261	76	48	79
40	84	210	44	84	51	115	146	224	85	45	305	95	59	94
50	97	210	51	84	51	115	157	224	89	45	305	95	59	95
63	124	232	64	106	51	115	183	224	101	45	305	95	59	107
New 75	166	262	85	156		70	233	218	136	70	276	65		144
New 90	200	281	105	168		78	254	259	141	70	341	72		151
New 110	238	292	123	175		86	301	287	164	120	369	80		174

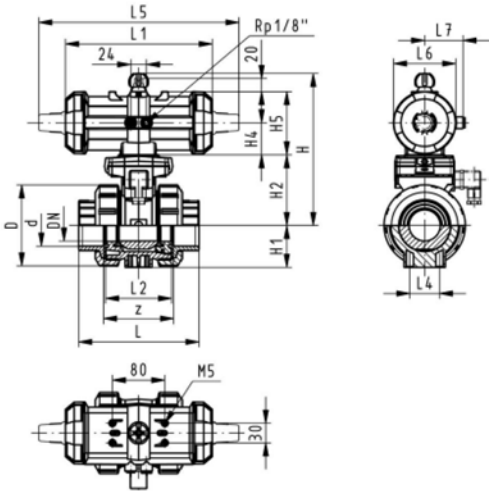

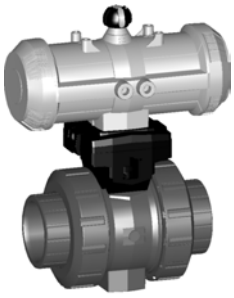

DN10/15 - 50

Ball valve type 230 PVC-U DA (Double acting)
Without manual override
With solvent cement sockets metric

Model:

- Assignment of actuators: PA11 (DN10/15-25), PA21 (DN32-50), PA35 (DN65), PA40 (DN80), PA45 (DN100)
- Image and drawing DN65-100 please see **New product ball valve DN65-100**
- For easy installation and removal
- Integrated stainless steel mounting inserts
- Control time 90°<) 1-2 s

Option:

- Individual configuration of the valve (see form)

d [mm]	DN [mm]	PN	kv-value (Δp=1 bar) [l/min]	EPDM Code	FPM Code	kg
16	10	10	70	**199 230 202**	**199 230 212**	1.159
20	15	10	185	**199 230 203**	**199 230 213**	1.159
25	20	10	350	**199 230 204**	**199 230 214**	1.276
32	25	10	700	**199 230 205**	**199 230 215**	1.400
40	32	10	1000	**199 230 206**	**199 230 216**	2.451
50	40	10	1600	**199 230 207**	**199 230 217**	2.773
63	50	10	3100	**199 230 208**	**199 230 218**	3.631
New 75	65	10	5000	**199 230 209**	**199 230 219**	3.100
New 90	80	10	7000	**199 230 210**	**199 230 220**	4.500
New 110	100	10	11000	**199 230 211**	**199 230 221**	5.900

d [mm]	D [mm]	H [mm]	H1 [mm]	H2 [mm]	H4 [mm]	H5 [mm]	L [mm]	L1 [mm]	L2 [mm]	L4 [mm]	L5 [mm]	L6 [mm]	L7 [mm]	z [mm]
16	50	167	27	62	40	97	92	194	56	25	261	76	48	64
20	50	167	27	62	40	97	95	194	56	25	261	76	48	64
25	58	176	30	71	40	97	110	194	65	25	261	76	48	72
32	68	176	36	71	40	97	123	194	71	25	261	76	48	79
40	84	210	44	84	51	115	146	224	85	45	305	95	59	94
50	97	210	51	84	51	115	157	224	89	45	305	95	59	95
63	124	232	64	106	51	115	183	224	101	45	305	95	59	107
New 75	166	257	85	156		66	233	144	136	70	190	60		144
New 90	200	274	105	168		70	254	152	141	70	198	65		151
New 110	238	273	123	175		78	301	169	164	120	235	72		174

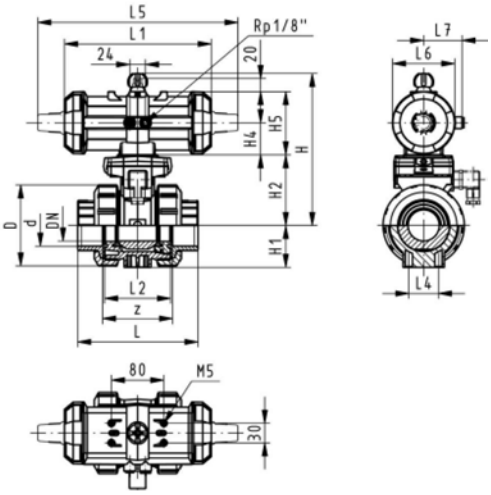

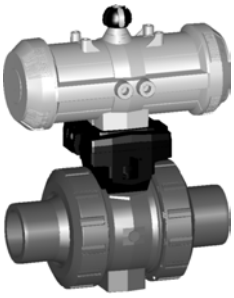

DN10/15 - 50

Ball valve type 230 PVC-U FC (Fail safe to close)
Without manual override
With solvent cement spigots metric

Model:

- Assignment of actuators PA11 (DN10/15-25), PA21 (DN32-50), PA30 (DN65), PA35 (DN80), PA40 (DN100)
- Image and drawing DN65-100 please see **New product ball valve DN65-100**
- For easy installation and removal
- Integrated stainless steel mounting inserts
- Control time 90°<) 1-2 s

Option:

- Individual configuration of the valve (see form)

d [mm]	DN [mm]	PN	kv-value (Δp=1 bar) [l/min]	EPDM Code	FPM Code	kg
16	10	10	70	**199 230 142**	**199 230 152**	1.159
20	15	10	185	**199 230 143**	**199 230 153**	1.159
25	20	10	350	**199 230 144**	**199 230 154**	1.276
32	25	10	700	**199 230 145**	**199 230 155**	1.400
40	32	10	1000	**199 230 146**	**199 230 156**	2.451
50	40	10	1600	**199 230 147**	**199 230 157**	2.773
63	50	10	3100	**199 230 148**	**199 230 158**	3.631
New 75	65	10	5000	**199 230 149**	**199 230 159**	4.400
New 90	80	10	7000	**199 230 150**	**199 230 160**	5.400
New 110	100	10	11000	**199 230 151**	**199 230 161**	7.900

d [mm]	D [mm]	H [mm]	H1 [mm]	H2 [mm]	H4 [mm]	H5 [mm]	L [mm]	L1 [mm]	L2 [mm]	L3 [mm]	L4 [mm]	L5 [mm]	L6 [mm]	L7 [mm]
16	50	167	27	62	40	97	114	194	56	0	25	261	76	48
20	50	167	27	62	40	97	124	194	56	130	25	261	76	48
25	58	176	30	71	40	97	144	194	65	150	25	261	76	48
32	68	176	36	71	40	97	154	194	71	160	25	261	76	48
40	84	210	44	84	51	115	174	224	85	180	45	305	95	59
50	97	210	51	84	51	115	194	224	89	200	45	305	95	59
63	124	232	64	106	51	115	224	224	101	230	45	305	95	59
New 75	166	262	85	156		70	284	218	136	290	70	276	65	
New 90	200	281	105	168		78	300	259	141	310	70	341	72	
New 110	238	292	123	175		86	340	287	164	350	120	369	80	

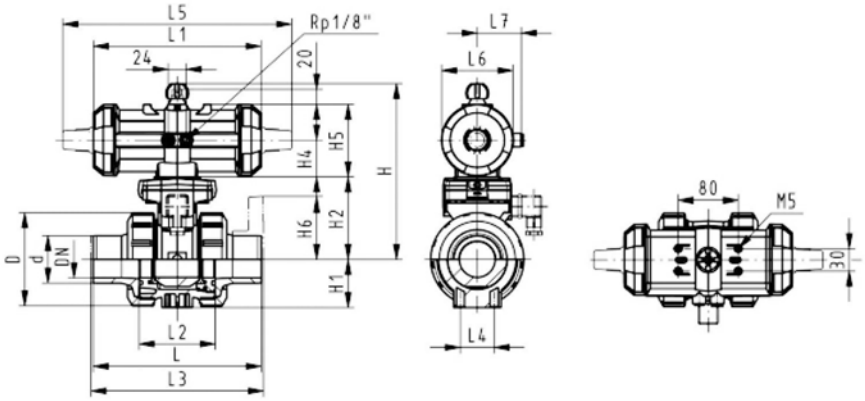

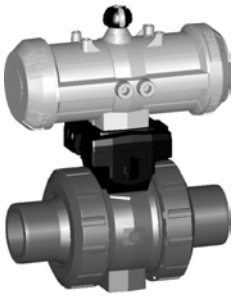

DN10/15 - 50

Ball valve type 230 PVC-U FO (Fail safe to open)
Without manual override
With solvent cement spigots metric

Model:

- Assignment of actuators PA11 (DN10/15-25), PA21 (DN32-50), PA30 (DN65), PA35 (DN80), PA40 (DN100)
- Image and drawing DN65-100 please see **New product ball valve DN65-100**
- For easy installation and removal
- Integrated stainless steel mounting inserts
- Control time 90°<) 1-2 s

Option:

- Individual configuration of the valve (see form)

d [mm]	DN [mm]	PN	kv-value (Δp=1 bar) [l/min]	EPDM Code	FPM Code	kg
16	10	10	70	**199 230 182**	**199 230 192**	1.159
20	15	10	185	**199 230 183**	**199 230 193**	1.159
25	20	10	350	**199 230 184**	**199 230 194**	1.276
32	25	10	700	**199 230 185**	**199 230 195**	1.400
40	32	10	1000	**199 230 186**	**199 230 196**	2.451
50	40	10	1600	**199 230 187**	**199 230 197**	2.773
63	50	10	3100	**199 230 188**	**199 230 198**	3.631
New 75	65	10	5000	**199 230 189**	**199 230 199**	4.400
New 90	80	10	7000	**199 230 190**	**199 230 200**	5.400
New 110	100	10	11000	**199 230 191**	**199 230 201**	7.900

d [mm]	D [mm]	H [mm]	H1 [mm]	H2 [mm]	H4 [mm]	H5 [mm]	L [mm]	L1 [mm]	L2 [mm]	L3 [mm]	L4 [mm]	L5 [mm]	L6 [mm]	L7 [mm]
16	50	167	27	62	40	97	114	194	56	0	25	261	76	48
20	50	167	27	62	40	97	124	194	56	130	25	261	76	48
25	58	176	30	71	40	97	144	194	65	150	25	261	76	48
32	68	176	36	71	40	97	154	194	71	160	25	261	76	48
40	84	210	44	84	51	115	174	224	85	180	45	305	95	59
50	97	210	51	84	51	115	194	224	89	200	45	305	95	59
63	124	232	64	106	51	115	224	224	101	230	45	305	95	59
New 75	166	262	85	156		70	284	218	136	290	70	276	65	
New 90	200	281	105	168		78	300	259	141	310	70	341	72	
New 110	238	292	123	175		86	340	287	164	350	120	369	80	

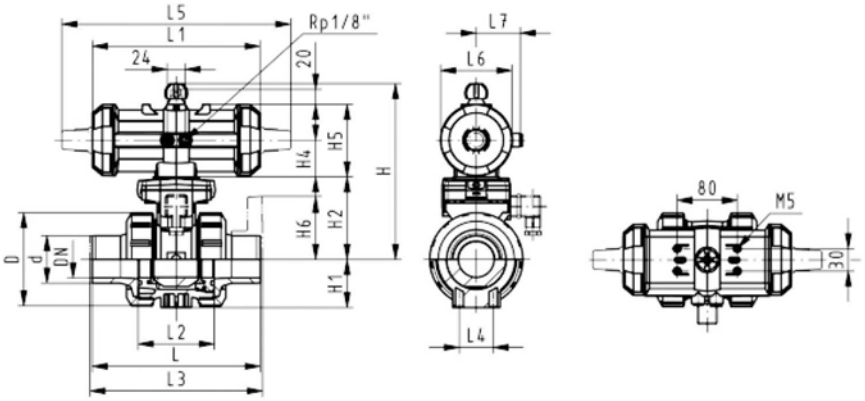

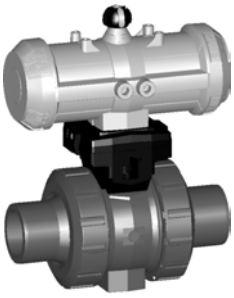

DN10/15 - 50

Ball valve type 230 PVC-U DA (Double acting)
Without manual override
With solvent cement spigots metric

Model:

- Assignment of actuators: PA11 (DN10/15-25), PA21 (DN32-50), PA35 (DN65), PA40 (DN80), PA45 (DN100)
- Image and drawing DN65-100 please see **New product ball valve DN65-100**
- For easy installation and removal
- Integrated stainless steel mounting inserts
- Control time 90°<) 1-2 s

Option:

- Individual configuration of the valve (see form)

d [mm]	DN [mm]	PN	kv-value (Δp=1 bar) [l/min]	EPDM Code	FPM Code	kg
16	10	10	70	**199 230 222**	**199 230 232**	1.159
20	15	10	185	**199 230 223**	**199 230 233**	1.159
25	20	10	350	**199 230 224**	**199 230 234**	1.276
32	25	10	700	**199 230 225**	**199 230 235**	1.400
40	32	10	1000	**199 230 226**	**199 230 236**	2.451
50	40	10	1600	**199 230 227**	**199 230 237**	2.773
63	50	10	3100	**199 230 228**	**199 230 238**	3.631
New 75	65	10	5000	**199 230 229**	**199 230 239**	3.300
New 90	80	10	7000	**199 230 230**	**199 230 240**	4.700
New 110	100	10	11000	**199 230 231**	**199 230 241**	6.200

d [mm]	D [mm]	H [mm]	H1 [mm]	H2 [mm]	H4 [mm]	H5 [mm]	L [mm]	L1 [mm]	L2 [mm]	L3 [mm]	L4 [mm]	L5 [mm]	L6 [mm]	L7 [mm]
16	50	167	27	62	40	97	114	194	56	0	25	261	76	48
20	50	167	27	62	40	97	124	194	56	130	25	261	76	48
25	58	176	30	71	40	97	144	194	65	150	25	261	76	48
32	68	176	36	71	40	97	154	194	71	160	25	261	76	48
40	84	210	44	84	51	115	174	224	85	180	45	305	95	59
50	97	210	51	84	51	115	194	224	89	200	45	305	95	59
63	124	232	64	106	51	115	224	224	101	230	45	305	95	59
New 75	166	257	85	156		66	284	144	136	290	70	190	60	
New 90	200	274	105	168		70	300	152	141	310	70	198	65	
New 110	238	273	123	175		78	340	169	164	350	120	235	72	

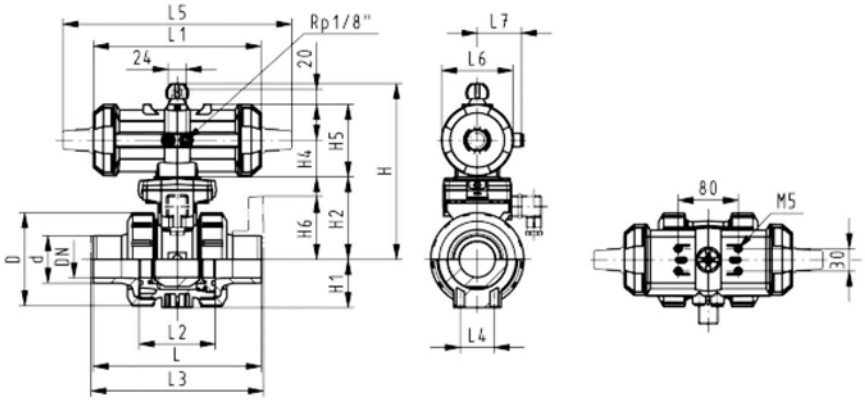

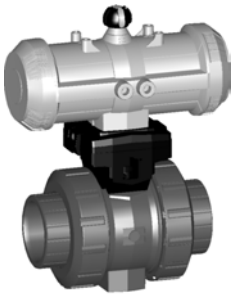

DN10/15 - 50

Ball valve type 230 PVC-U FC (Fail safe to close)
Without manual override
With threaded sockets Rp

Model:

- Assignment of actuators PA11 (DN10/15-25), PA21 (DN32-50), PA30 (DN65), PA35 (DN80), PA40 (DN100)
- Image and drawing DN65-100 please see **New product ball valve DN65-100**
- For easy installation and removal
- Integrated stainless steel mounting inserts
- Control time 90°<) 1-2 s

Option:

- Individual configuration of the valve (see form)

Rp [inch]	DN [mm]	PN	kv-value (Δp=1 bar) [l/min]	EPDM Code	FPM Code	kg
⅜	10	10	70	**199 230 662**	**199 230 672**	1.200
½	15	10	185	**199 230 663**	**199 230 673**	1.200
¾	20	10	350	**199 230 664**	**199 230 674**	1.300
1	25	10	700	**199 230 665**	**199 230 675**	1.400
1 ¼	32	10	1000	**199 230 666**	**199 230 676**	2.500
1 ½	40	10	1600	**199 230 667**	**199 230 677**	2.800
2	50	10	3100	**199 230 668**	**199 230 678**	3.700
New 2 ½	65	10	5000	**199 230 669**	**199 230 679**	4.300
New 3	80	10	7000	**199 230 670**	**199 230 680**	5.300
New 4	100	10	11000	**199 230 671**	**199 230 681**	7.700

Rp [inch]	D [mm]	H [mm]	H1 [mm]	H2 [mm]	H4 [mm]	H5 [mm]	L [mm]	L1 [mm]	L2 [mm]	L4 [mm]	L5 [mm]	L6 [mm]	L7 [mm]	z [mm]
⅜	50	167	27	62	40	97	92	194	56	25	261	76	48	64
½	50	167	27	62	40	97	95	194	56	25	261	76	48	64
¾	58	176	30	71	40	97	110	194	65	25	261	76	48	72
1	68	176	36	71	40	97	123	194	71	25	261	76	48	79
1 ¼	84	210	44	84	51	115	146	224	85	45	305	95	59	94
1 ½	97	210	51	84	51	115	157	224	89	45	305	95	59	95
2	124	232	64	106	51	115	183	224	101	45	305	95	59	107
New 2 ½	166	262	85	156		70	233	218	136	70	276	65		144
New 3	200	281	105	168		78	254	259	141	70	341	72		151
New 4	238	292	123	175		86	301	287	164	120	369	80		174

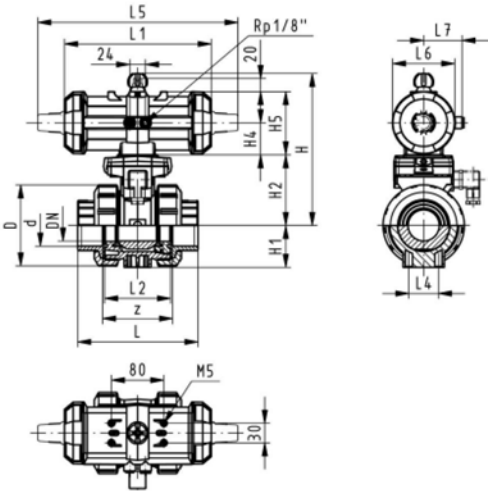

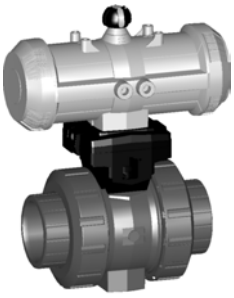

DN10/15 - 50

Ball valve type 230 PVC-U FO (Fail safe to open)
Without manual override
With threaded sockets Rp

Model:

- Assignment of actuators PA11 (DN10/15-25), PA21 (DN32-50), PA30 (DN65), PA35 (DN80), PA40 (DN100)
- Image and drawing DN65-100 please see **New product ball valve DN65-100**
- For easy installation and removal
- Integrated stainless steel mounting inserts
- Control time 90°<) 1-2 s

Option:

- Individual configuration of the valve (see form)

Rp [inch]	DN [mm]	PN	kv-value (Δp=1 bar) [l/min]	EPDM Code	FPM Code	kg
⅜	10	10	70	**199 230 682**	**199 230 692**	1.200
½	15	10	185	**199 230 683**	**199 230 693**	1.200
¾	20	10	350	**199 230 684**	**199 230 694**	1.300
1	25	10	700	**199 230 685**	**199 230 695**	1.400
1 ¼	32	10	1000	**199 230 686**	**199 230 696**	2.500
1 ½	40	10	1600	**199 230 687**	**199 230 697**	2.800
2	50	10	3100	**199 230 688**	**199 230 698**	3.700
New 2 ½	65	10	5000	**199 230 689**	**199 230 699**	4.300
New 3	80	10	7000	**199 230 690**	**199 230 700**	5.300
New 4	100	10	11000	**199 230 691**	**199 230 701**	7.700

Rp [inch]	D [mm]	H [mm]	H1 [mm]	H2 [mm]	H4 [mm]	H5 [mm]	L [mm]	L1 [mm]	L2 [mm]	L4 [mm]	L5 [mm]	L6 [mm]	L7 [mm]	z [mm]
⅜	50	167	27	62	40	97	92	194	56	25	261	76	48	64
½	50	167	27	62	40	97	95	194	56	25	261	76	48	64
¾	58	176	30	71	40	97	110	194	65	25	261	76	48	72
1	68	176	36	71	40	97	123	194	71	25	261	76	48	79
1 ¼	84	210	44	84	51	115	146	224	85	45	305	95	59	94
1 ½	97	210	51	84	51	115	157	224	89	45	305	95	59	95
2	124	232	64	106	51	115	183	224	101	45	305	95	59	107
New 2 ½	166	262	85	156		70	233	218	136	70	276	65		144
New 3	200	281	105	168		78	254	259	141	70	341	72		151
New 4	238	292	123	175		86	301	287	164	120	369	80		174

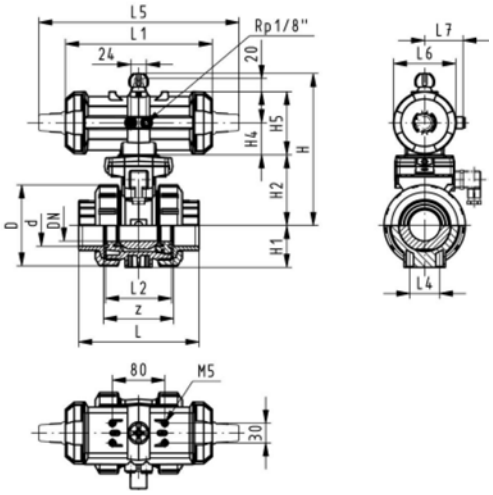

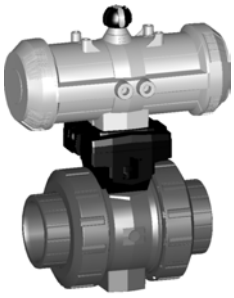

DN10/15 - 50

Ball valve type 230 PVC-U DA (Double acting)
Without manual override
With threaded sockets Rp

Model:

- Assignment of actuators: PA11 (DN10/15-25), PA21 (DN32-50), PA35 (DN65), PA40 (DN80), PA45 (DN100)
- Image and drawing DN65-100 please see **New product ball valve DN65-100**
- For easy installation and removal
- Integrated stainless steel mounting inserts
- Control time 90°<) 1-2 s

Option:

- Individual configuration of the valve (see form)

Rp [inch]	DN [mm]	PN	kv-value (Δp=1 bar) [l/min]	EPDM Code	FPM Code	kg
⅜	10	10	70	**199 230 712**	**199 230 732**	1.200
½	15	10	185	**199 230 713**	**199 230 733**	1.200
¾	20	10	350	**199 230 714**	**199 230 734**	1.300
1	25	10	700	**199 230 715**	**199 230 735**	1.400
1 ¼	32	10	1000	**199 230 716**	**199 230 736**	2.500
1 ½	40	10	1600	**199 230 717**	**199 230 737**	2.800
2	50	10	3100	**199 230 718**	**199 230 738**	3.700
New 2 ½	65	10	5000	**199 230 719**	**199 230 739**	3.200
New 3	80	10	7000	**199 230 720**	**199 230 740**	4.700
New 4	100	10	11000	**199 230 721**	**199 230 741**	6.000

Rp [inch]	D [mm]	H [mm]	H1 [mm]	H2 [mm]	H4 [mm]	H5 [mm]	L [mm]	L1 [mm]	L2 [mm]	L4 [mm]	L5 [mm]	L6 [mm]	L7 [mm]	z [mm]
⅜	50	167	27	62	40	97	92	194	56	25	261	76	48	64
½	50	167	27	62	40	97	95	194	56	25	261	76	48	64
¾	58	176	30	71	40	97	110	194	65	25	261	76	48	72
1	68	176	36	71	40	97	123	194	71	25	261	76	48	79
1 ¼	84	210	44	84	51	115	146	224	85	45	305	95	59	94
1 ½	97	210	51	84	51	115	157	224	89	45	305	95	59	95
2	124	232	64	106	51	115	183	224	101	45	305	95	59	107
New 2 ½	166	257	85	156		66	233	144	136	70	190	60		144
New 3	200	274	105	168		70	254	152	141	70	198	65		151
New 4	238	273	123	175		78	301	169	164	120	235	72		174

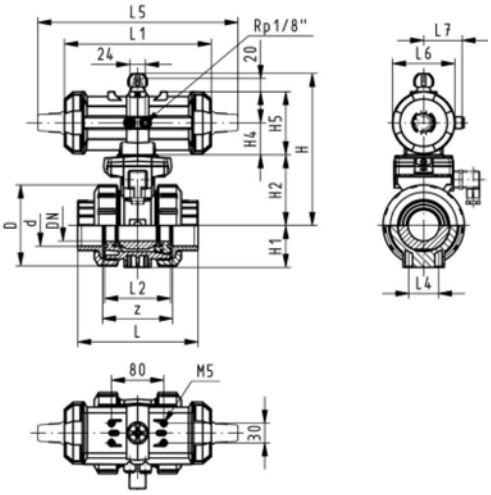

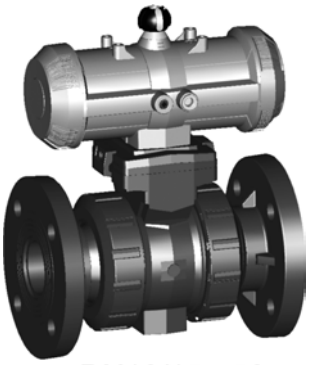

DN10/15 - 50

Ball valve type 230 PVC-U FC (Fail safe to close)
Without manual override
With fixed flanges serrated metric

Model:

- Assignment of actuators PA11 (DN10/15-25), PA21 (DN32-50), PA30 (DN65), PA35 (DN80), PA40 (DN100)
- Image and drawing DN65-100 please see **New product ball valve DN65-100**
- For easy installation and removal
- Integrated stainless steel mounting inserts
- Control time 90°<) 1-2 s
- Overall length according to EN 558-1
- Connecting dimensions: ISO 7005 / EN 1092 / DIN 2501 PN10 / BS4504

Option:

- Individual configuration of the valve (see form)

d [mm]	DN [mm]	Inch	PN	kv-value (Δp=1 bar) [l/min]	EPDM Code	FPM Code	kg
20	15	½	10	185	**199 230 303**	**199 230 313**	1.700
25	20	¾	10	350	**199 230 304**	**199 230 314**	1.900
32	25	1	10	700	**199 230 305**	**199 230 315**	2.100
40	32	1 ¼	10	1000	**199 230 306**	**199 230 316**	3.400
50	40	1 ½	10	1600	**199 230 307**	**199 230 317**	3.800
63	50	2	10	3100	**199 230 308**	**199 230 318**	4.900

d [mm]	D [mm]	H [mm]	H1 [mm]	H2 [mm]	H4 [mm]	H5 [mm]	H6 [mm]	L [mm]	L1 [mm]	L2 [mm]	L3 [mm]	L4 [mm]	L5 [mm]	L6 [mm]	L7 [mm]
20	50	167	27	62	40	97	48	124	194	56	130	25	261	76	48
25	58	176	30	71	40	97	53	144	194	65	150	25	261	76	48
32	68	176	36	71	40	97	58	154	194	71	160	25	261	76	48
40	84	210	44	84	51	115	70	174	224	85	180	45	305	95	59
50	97	210	51	84	51	115	75	194	224	89	200	45	305	95	59
63	124	232	64	106	51	115	83	224	224	101	230	45	305	95	59

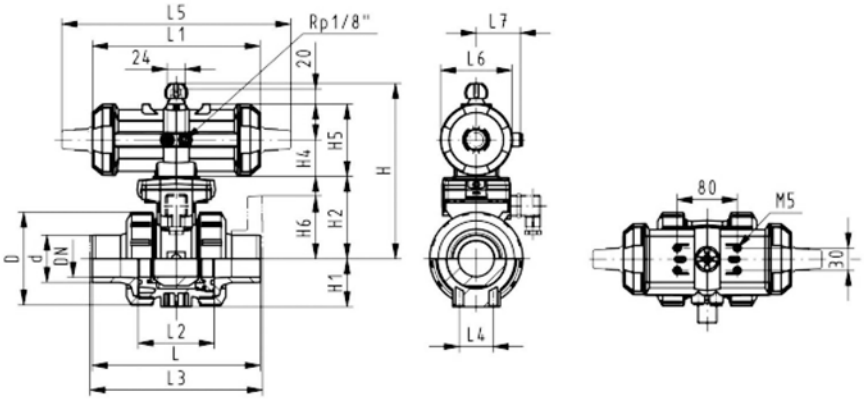

DN10/15 - 50

Ball valve type 230 PVC-U FO (Fail safe to open)
Without manual override
With fixed flanges serrated metric

Model:

- Assignment of actuators PA11 (DN10/15-25), PA21 (DN32-50), PA30 (DN65), PA35 (DN80), PA40 (DN100)
- Image and drawing DN65-100 please see **New product ball valve DN65-100**
- For easy installation and removal
- Integrated stainless steel mounting inserts
- Control time 90°<) 1-2 s
- Overall length according to EN 558-1
- Connecting dimensions: ISO 7005 / EN 1092 / DIN 2501 PN10 / BS4504

Option:

- Individual configuration of the valve (see form)

d [mm]	DN [mm]	Inch	PN	kv-value (Δp=1 bar) [l/min]	EPDM Code	FPM Code	kg
20	15	½	10	185	**199 230 323**	**199 230 333**	1.700
25	20	¾	10	350	**199 230 324**	**199 230 334**	1.900
32	25	1	10	700	**199 230 325**	**199 230 335**	2.100
40	32	1 ¼	10	1000	**199 230 326**	**199 230 336**	3.400
50	40	1 ½	10	1600	**199 230 327**	**199 230 337**	3.800
63	50	2	10	3100	**199 230 328**	**199 230 338**	4.900

d [mm]	D [mm]	H [mm]	H1 [mm]	H2 [mm]	H4 [mm]	H5 [mm]	H6 [mm]	L [mm]	L1 [mm]	L2 [mm]	L3 [mm]	L4 [mm]	L5 [mm]	L6 [mm]	L7 [mm]
20	50	167	27	62	40	97	48	124	194	56	130	25	261	76	48
25	58	176	30	71	40	97	53	144	194	65	150	25	261	76	48
32	68	176	36	71	40	97	58	154	194	71	160	25	261	76	48
40	84	210	44	84	51	115	70	174	224	85	180	45	305	95	59
50	97	210	51	84	51	115	75	194	224	89	200	45	305	95	59
63	124	232	64	106	51	115	83	224	224	101	230	45	305	95	59

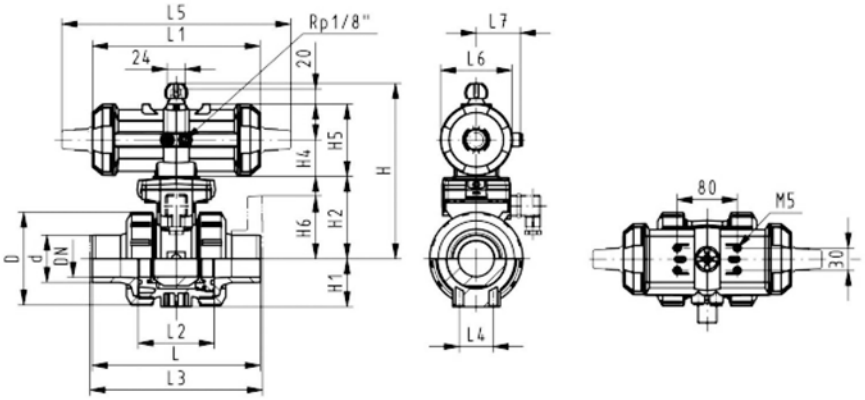

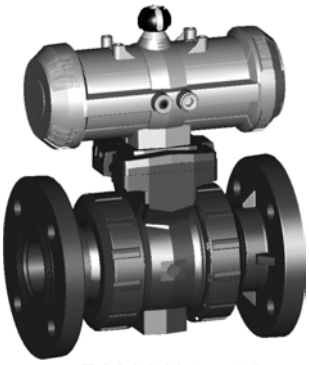

DN10/15 - 50

Ball valve type 230 PVC-U DA (Double acting)
Without manual override
With fixed flanges metric

Model:

- Assignment of actuators: PA11 (DN10/15-25), PA21 (DN32-50), PA35 (DN65), PA40 (DN80), PA45 (DN100)
- Image and drawing DN65-100 please see **New product ball valve DN65-100**
- For easy installation and removal
- Integrated stainless steel mounting inserts
- Control time 90°<) 1-2 s
- Overall length according to EN 558-1
- Connecting dimensions: ISO 7005 / EN 1092 / DIN 2501 PN10 / BS4504

Option:

- Individual configuration of the valve (see form)

d [mm]	DN [mm]	Inch	PN	kv-value (Δp=1 bar) [l/min]	EPDM Code	FPM Code	kg
20	15	½	10	185	**199 230 343**	**199 230 353**	1.700
25	20	¾	10	350	**199 230 344**	**199 230 354**	1.900
32	25	1	10	700	**199 230 345**	**199 230 355**	2.100
40	32	1 ¼	10	1000	**199 230 346**	**199 230 356**	3.400
50	40	1 ½	10	1600	**199 230 347**	**199 230 357**	3.800
63	50	2	10	3100	**199 230 348**	**199 230 358**	4.900

d [mm]	D [mm]	H [mm]	H1 [mm]	H2 [mm]	H4 [mm]	H5 [mm]	H6 [mm]	L [mm]	L1 [mm]	L2 [mm]	L3 [mm]	L4 [mm]	L5 [mm]	L6 [mm]	L7 [mm]
20	50	167	27	62	40	97	48	124	194	56	130	25	261	76	48
25	58	176	30	71	40	97	53	144	194	65	150	25	261	76	48
32	68	176	36	71	40	97	58	154	194	71	160	25	261	76	48
40	84	210	44	84	51	115	70	174	224	85	180	45	305	95	59
50	97	210	51	84	51	115	75	194	224	89	200	45	305	95	59
63	124	232	64	106	51	115	83	224	224	101	230	45	305	95	59

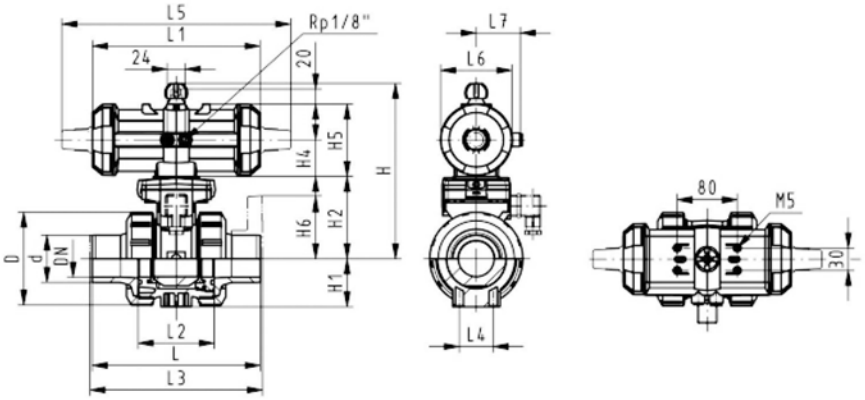

Ball valve type 230 PVC-U FC (Fail safe to close)
Without manual override
With backing flanges PP-st metric

Model:

- Assignment of actuators PA11 (DN10/15-25), PA21 (DN32-50), PA30 (DN65), PA35 (DN80), PA40 (DN100)
- Image and drawing DN65-100 please see **New product ball valve DN65-100**
- For easy installation and removal
- Integrated stainless steel mounting inserts
- Control time 90°<) 1-2 s
- Overall length according to EN 558-1
- Connecting dimensions: ISO 7005, EN 1092, BS 4504, DIN 2501; bolt circle PN 10

Option:

- Individual configuration of the valve (see form)

d [mm]	DN [mm]	PN	kv-value (Δp=1 bar) [l/min]	EPDM Code	FPM Code	kg
New 75	65	10	5000	**199 234 469**	**199 234 479**	8.500
New 90	80	10	7000	**199 234 470**	**199 234 480**	10.300
New 110	100	10	11000	**199 234 471**	**199 234 481**	14.600

d [mm]	D [mm]	H [mm]	H1 [mm]	H2 [mm]	H5 [mm]	H6 [mm]	L [mm]	L1 [mm]	L2 [mm]	L3 [mm]	L4 [mm]	L5 [mm]	L6 [mm]
New 75	166	262	85	156	70	93	284	218	136	290	70	276	65
New 90	200	281	105	168	78	100	300	259	141	310	70	341	72
New 110	238	292	123	175	86	110	340	287	164	350	120	369	80

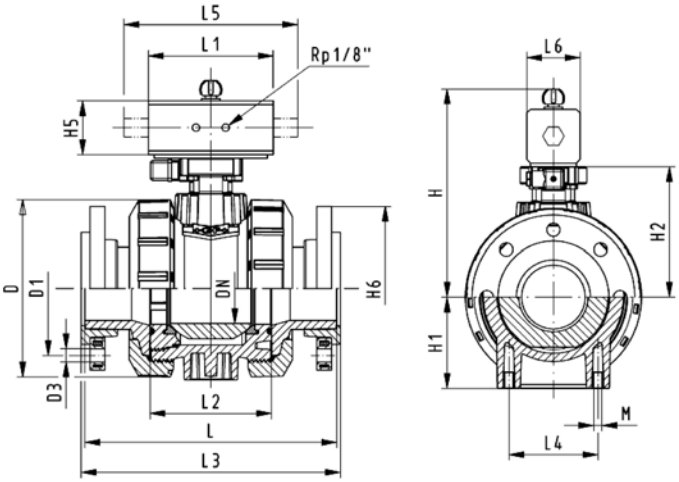

Ball valve type 230 PVC-U FO (Fail safe to open)
Without manual override
With backing flanges PP-st metric

Model:

- Assignment of actuators PA11 (DN10/15-25), PA21 (DN32-50), PA30 (DN65), PA35 (DN80), PA40 (DN100)
- Image and drawing DN65-100 please see **New product ball valve DN65-100**
- For easy installation and removal
- Integrated stainless steel mounting inserts
- Control time 90°<) 1-2 s
- Overall length according to EN 558-1
- Connecting dimensions: ISO 7005, EN 1092, BS 4504, DIN 2501; bolt circle PN 10

Option:

- Individual configuration of the valve (see form)

d [mm]	DN [mm]	PN	kv-value (Δp=1 bar) [l/min]	EPDM Code	FPM Code	kg
New 75	65	10	5000	**199 234 489**	**199 234 499**	8.500
New 90	80	10	7000	**199 234 490**	**199 234 500**	10.300
New 110	100	10	11000	**199 234 491**	**199 234 501**	14.600

d [mm]	D [mm]	H [mm]	H1 [mm]	H2 [mm]	H5 [mm]	H6 [mm]	L [mm]	L1 [mm]	L2 [mm]	L3 [mm]	L4 [mm]	L5 [mm]	L6 [mm]
New 75	166	262	85	156	70	93	284	218	136	290	70	276	65
New 90	200	281	105	168	78	100	300	259	141	310	70	341	72
New 110	238	292	123	175	86	110	340	287	164	350	120	369	80

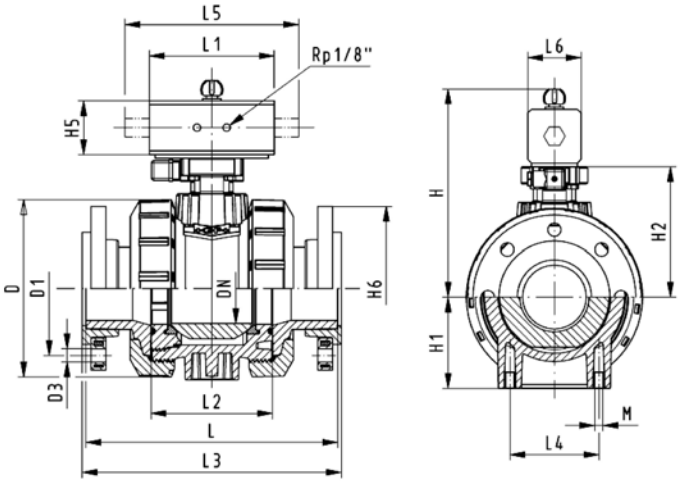

Ball valve type 230 PVC-U DA (Double acting)
Without manual override
With backing flanges PP-st metric

Model:

- Assignment of actuators: PA11 (DN10/15-25), PA21 (DN32-50), PA35 (DN65), PA40 (DN80), PA45 (DN100)
- Image and drawing DN65-100 please see **New product ball valve DN65-100**
- For easy installation and removal
- Integrated stainless steel mounting inserts
- Control time 90°<) 1-2 s
- Overall length according to EN 558-1
- Connecting dimensions: ISO 7005, EN 1092, BS 4504, DIN 2501; bolt circle PN 10

Option:

- Individual configuration of the valve (see form)

d [mm]	DN [mm]	PN	kv-value (Δp=1 bar) [l/min]	EPDM Code	FPM Code	kg
New 75	65	10	5000	**199 234 509**	**199 234 519**	7.300
New 90	80	10	7000	**199 234 510**	**199 234 520**	9.600
New 110	100	10	11000	**199 234 511**	**199 234 521**	12.800

d [mm]	D [mm]	H [mm]	H1 [mm]	H2 [mm]	H5 [mm]	H6 [mm]	L [mm]	L1 [mm]	L2 [mm]	L3 [mm]	L4 [mm]	L5 [mm]	L6 [mm]
New 75	166	257	85	156	66	93	284	144	136	290	70	190	60
New 90	200	274	105	168	70	100	300	152	141	310	70	198	65
New 110	238	273	123	175	78	110	340	169	164	350	120	235	72

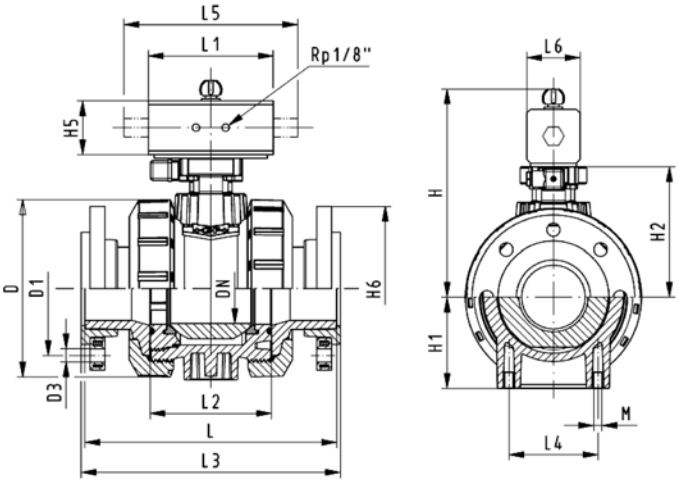

Ball valves pneumatic

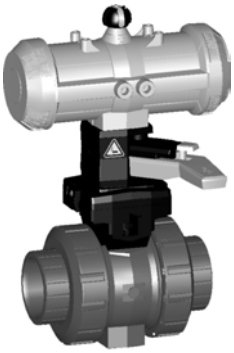

DN10/15 - 50

Ball valve type 234 PVC-U FC (Fail safe to close)
With manual override
With solvent cement sockets Inch BS

Model:

- Built on with pneumatic actuator PA11/21
- Control time 90°<) 1-2 s
- For easy installation and removal
- Integrated stainless steel mounting inserts

Option:

- Individual configuration of the valve (see form)

Inch	DN [mm]	PN	kv-value (Δp=1 bar) [l/min]	EPDM Code	FPM Code	kg
⅜	10	10	70	**199 234 002**	**199 234 012**	1.500
½	15	10	185	**199 234 003**	**199 234 013**	1.500
¾	20	10	350	**199 234 004**	**199 234 014**	1.600
1	25	10	700	**199 234 005**	**199 234 015**	1.700
1 ¼	32	10	1000	**199 234 006**	**199 234 016**	2.800
1 ½	40	10	1600	**199 234 007**	**199 234 017**	3.100
2	50	10	3100	**199 234 008**	**199 234 018**	4.000

Inch	D [mm]	H [mm]	H1 [mm]	H2 [mm]	H3 [mm]	H4 [mm]	H5 [mm]	L [mm]	L1 [mm]	L2 [mm]	L4 [mm]	L5 [mm]	L6 [mm]	L7 [mm]	z [mm]
⅜	50	230	27	62	168	40	97	92	194	56	25	261	76	48	60
½	50	230	27	62	168	40	97	95	194	56	25	261	76	48	60
¾	58	239	30	71	168	40	97	110	194	65	25	261	76	48	69
1	68	239	36	71	168	40	97	123	194	71	25	261	76	48	75
1 ¼	84	271	44	84	187	51	115	146	224	85	45	305	95	59	89
1 ½	97	271	51	84	187	51	115	157	224	89	45	305	95	59	97
2	124	293	64	106	187	51	115	183	224	101	45	305	95	59	110

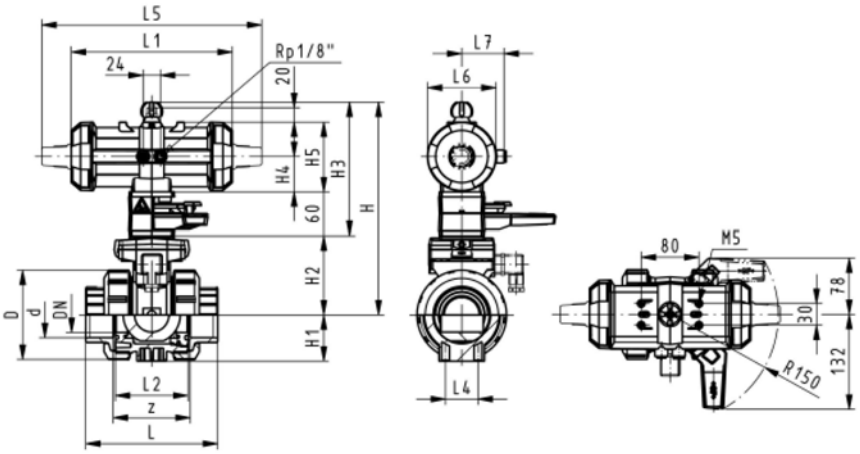

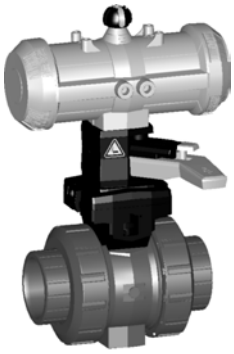

DN10/15 - 50

Ball valve type 234 PVC-U FO (Fail safe to open)
With manual override
With solvent cement sockets Inch BS

Model:

- Built on with pneumatic actuator PA11/21
- Control time 90°<) 1-2 s
- For easy installation and removal
- Integrated stainless steel mounting inserts

Option:

- Individual configuration of the valve (see form)

Inch	DN [mm]	PN	kv-value (Δp=1 bar) [l/min]	EPDM Code	FPM Code	kg
⅜	10	10	70	**199 234 042**	**199 234 052**	1.500
½	15	10	185	**199 234 043**	**199 234 053**	1.500
¾	20	10	350	**199 234 044**	**199 234 054**	1.600
1	25	10	700	**199 234 045**	**199 234 055**	1.700
1 ¼	32	10	1000	**199 234 046**	**199 234 056**	2.800
1 ½	40	10	1600	**199 234 047**	**199 234 057**	3.100
2	50	10	3100	**199 234 048**	**199 234 058**	4.000

Inch	D [mm]	H [mm]	H1 [mm]	H2 [mm]	H3 [mm]	H4 [mm]	H5 [mm]	L [mm]	L1 [mm]	L2 [mm]	L4 [mm]	L5 [mm]	L6 [mm]	L7 [mm]	z [mm]
⅜	50	230	27	62	168	40	97	92	194	56	25	261	76	48	60
½	50	230	27	62	168	40	97	95	194	56	25	261	76	48	60
¾	58	239	30	71	168	40	97	110	194	65	25	261	76	48	69
1	68	239	36	71	168	40	97	123	194	71	25	261	76	48	75
1 ¼	84	271	44	84	187	51	115	146	224	85	45	305	95	59	89
1 ½	97	271	51	84	187	51	115	157	224	89	45	305	95	59	97
2	124	293	64	106	187	51	115	183	224	101	45	305	95	59	110

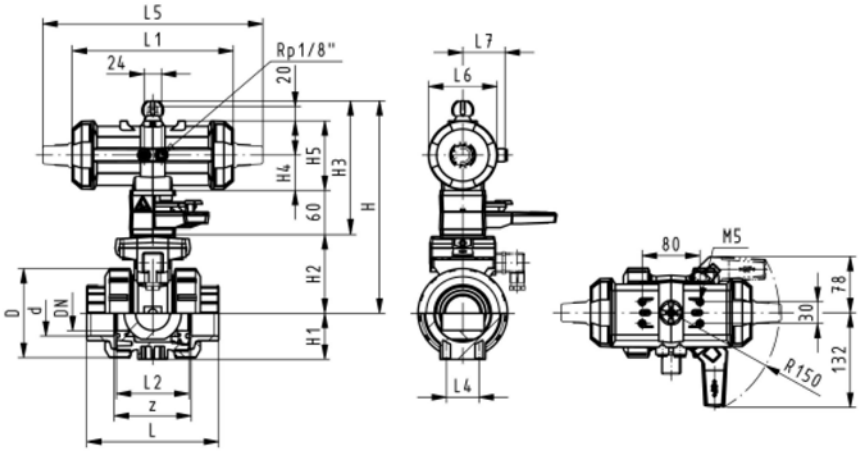

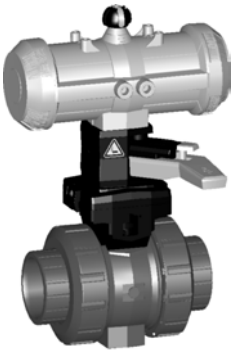

DN10/15 - 50

Ball valve type 234 PVC-U DA (Double acting)
With manual override
With solvent cement sockets Inch BS

Model:

- Built on with pneumatic actuator PA11/21
- Control time 90°<) 1-2 s
- For easy installation and removal
- Integrated stainless steel mounting inserts

Option:

- Individual configuration of the valve (see form)

Inch	DN [mm]	PN	kv-value (Δp=1 bar) [l/min]	EPDM Code	FPM Code	kg
⅜	10	10	70	**199 234 082**	**199 234 092**	1.500
½	15	10	185	**199 234 083**	**199 234 093**	1.500
¾	20	10	350	**199 234 084**	**199 234 094**	1.600
1	25	10	700	**199 234 085**	**199 234 095**	1.700
1 ¼	32	10	1000	**199 234 086**	**199 234 096**	2.800
1 ½	40	10	1600	**199 234 087**	**199 234 097**	3.100
2	50	10	3100	**199 234 088**	**199 234 098**	4.000

Inch	D [mm]	H [mm]	H1 [mm]	H2 [mm]	H3 [mm]	H4 [mm]	H5 [mm]	L [mm]	L1 [mm]	L2 [mm]	L4 [mm]	L5 [mm]	L6 [mm]	L7 [mm]	z [mm]
⅜	50	230	27	62	168	40	97	92	194	56	25	261	76	48	60
½	50	230	27	62	168	40	97	95	194	56	25	261	76	48	60
¾	58	239	30	71	168	40	97	110	194	65	25	261	76	48	69
1	68	239	36	71	168	40	97	123	194	71	25	261	76	48	75
1 ¼	84	271	44	84	187	51	115	146	224	85	45	305	95	59	89
1 ½	97	271	51	84	187	51	115	157	224	89	45	305	95	59	97
2	124	293	64	106	187	51	115	183	224	101	45	305	95	59	110

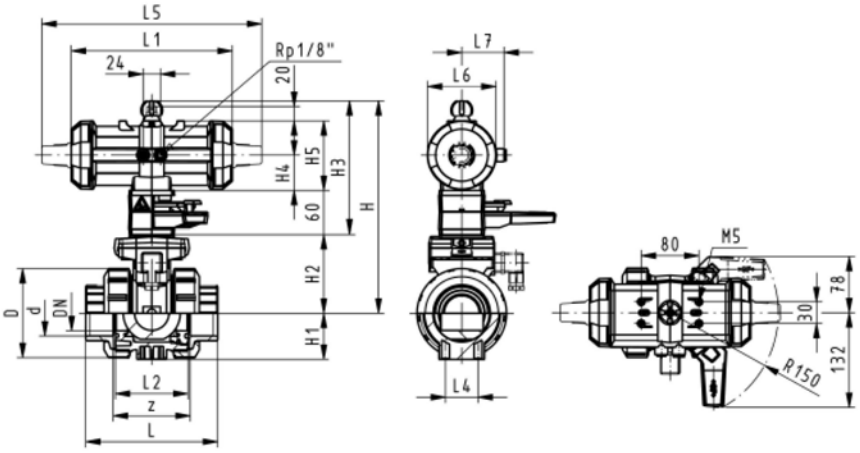

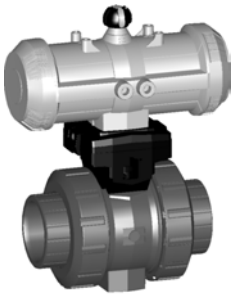

DN10/15 - 50

Ball valve type 234 PVC-U FC (Fail safe to close)
Without manual override
With solvent cement sockets Inch BS

Model:

- Assignment of actuators PA11 (DN10/15-25), PA21 (DN32-50), PA30 (DN65), PA35 (DN80), PA40 (DN100)
- Image and drawing DN65-100 please see **New product ball valve DN65-100**
- For easy installation and removal
- Integrated stainless steel mounting inserts
- Control time 90°<) 1-2 s

Option:

- Individual configuration of the valve (see form)

Inch	DN [mm]	PN	kv-value (Δp=1 bar) [l/min]	EPDM Code	FPM Code	kg
⅜	10	10	70	**199 234 122**	**199 234 132**	1.500
½	15	10	185	**199 234 123**	**199 234 133**	1.500
¾	20	10	350	**199 234 124**	**199 234 134**	1.600
1	25	10	700	**199 234 125**	**199 234 135**	1.700
1 ¼	32	10	1000	**199 234 126**	**199 234 136**	2.800
1 ½	40	10	1600	**199 234 127**	**199 234 137**	3.100
2	50	10	3100	**199 234 128**	**199 234 138**	4.000
New 2 ½	65	10	5000	**199 234 129**	**199 234 139**	4.300
New 3	80	10	7000	**199 234 130**	**199 234 140**	5.200
New 4	100	10	11000	**199 234 131**	**199 234 141**	7.600

Inch	D [mm]	H [mm]	H1 [mm]	H2 [mm]	H4 [mm]	H5 [mm]	L [mm]	L1 [mm]	L2 [mm]	L4 [mm]	L5 [mm]	L6 [mm]	L7 [mm]	z [mm]
⅜	50	167	27	62	40	97	92	194	56	25	261	76	48	60
½	50	167	27	62	40	97	95	194	56	25	261	76	48	60
¾	58	176	30	71	40	97	110	194	65	25	261	76	48	69
1	68	176	36	71	40	97	123	194	71	25	261	76	48	75
1 ¼	84	210	44	84	51	115	146	224	85	45	305	95	59	89
1 ½	97	210	51	84	51	115	157	224	89	45	305	95	59	97
2	124	232	64	106	51	115	183	224	101	45	305	95	59	110
New 2 ½	166	262	85	156		70	233	218	136	70	276	65		144
New 3	200	281	105	168		78	254	259	141	70	341	72		151
New 4	238	292	123	175		86	301	287	164	120	369	80		174

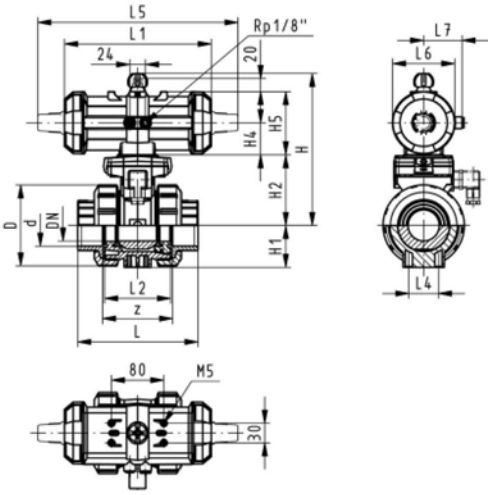

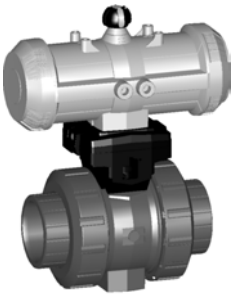

DN10/15 - 50

Ball valve type 234 PVC-U FO (Fail safe to open)
Without manual override
With solvent cement sockets Inch BS

Model:

- Assignment of actuators PA11 (DN10/15-25), PA21 (DN32-50), PA30 (DN65), PA35 (DN80), PA40 (DN100)
- Image and drawing DN65-100 please see **New product ball valve DN65-100**
- For easy installation and removal
- Integrated stainless steel mounting inserts
- Control time 90°<) 1-2 s

Option:

- Individual configuration of the valve (see form)

Inch	DN [mm]	PN	kv-value (Δp=1 bar) [l/min]	EPDM Code	FPM Code	kg
⅜	10	10	70	**199 234 162**	**199 234 172**	1.500
½	15	10	185	**199 234 163**	**199 234 173**	1.500
¾	20	10	350	**199 234 164**	**199 234 174**	1.600
1	25	10	700	**199 234 165**	**199 234 175**	1.700
1 ¼	32	10	1000	**199 234 166**	**199 234 176**	2.800
1 ½	40	10	1600	**199 234 167**	**199 234 177**	3.100
2	50	10	3100	**199 234 168**	**199 234 178**	4.000
New 2 ½	65	10	5000	**199 234 169**	**199 234 179**	4.300
New 3	80	10	7000	**199 234 170**	**199 234 180**	5.200
New 4	100	10	11000	**199 234 171**	**199 234 181**	7.600

Inch	D [mm]	H [mm]	H1 [mm]	H2 [mm]	H4 [mm]	H5 [mm]	L [mm]	L1 [mm]	L2 [mm]	L4 [mm]	L5 [mm]	L6 [mm]	L7 [mm]	z [mm]
⅜	50	167	27	62	40	97	92	194	56	25	261	76	48	60
½	50	167	27	62	40	97	95	194	56	25	261	76	48	60
¾	58	176	30	71	40	97	110	194	65	25	261	76	48	69
1	68	176	36	71	40	97	123	194	71	25	261	76	48	75
1 ¼	84	210	44	84	51	115	146	224	85	45	305	95	59	89
1 ½	97	210	51	84	51	115	157	224	89	45	305	95	59	97
2	124	232	64	106	51	115	183	224	101	45	305	95	59	110
New 2 ½	166	262	85	156		70	233	218	136	70	276	65		144
New 3	200	281	105	168		78	254	259	141	70	341	72		151
New 4	238	292	123	175		86	301	287	164	120	369	80		174

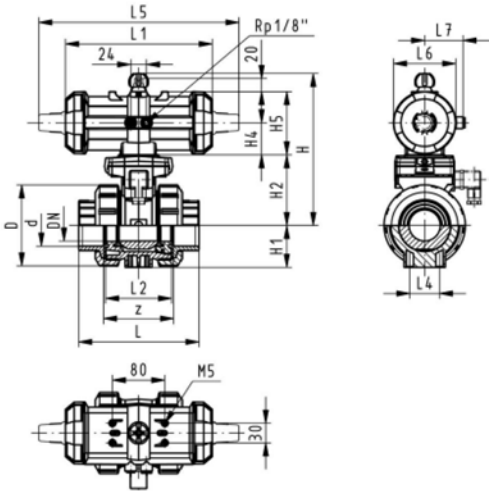

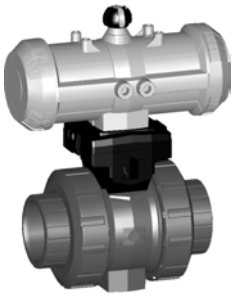

DN10/15 - 50

Ball valve type 234 PVC-U DA (Double acting)
Without manual override
With solvent cement sockets Inch BS

Model:

- Assignment of actuators: PA11 (DN10/15-25), PA21 (DN32-50), PA35 (DN65), PA40 (DN80), PA45 (DN100)
- Image and drawing DN65-100 please see **New product ball valve DN65-100**
- For easy installation and removal
- Integrated stainless steel mounting inserts
- Control time 90°<) 1-2 s

Option:

- Individual configuration of the valve (see form)

Inch	DN [mm]	PN	kv-value (Δp=1 bar) [l/min]	EPDM Code	FPM Code	kg
⅜	10	10	70	**199 234 202**	**199 234 212**	1.500
½	15	10	185	**199 234 203**	**199 234 213**	1.500
¾	20	10	350	**199 234 204**	**199 234 214**	1.600
1	25	10	700	**199 234 205**	**199 234 215**	1.700
1 ¼	32	10	1000	**199 234 206**	**199 234 216**	2.800
1 ½	40	10	1600	**199 234 207**	**199 234 217**	3.100
2	50	10	3100	**199 234 208**	**199 234 218**	4.000
New 2 ½	65	10	5000	**199 234 209**	**199 234 219**	3.100
New 3	80	10	7000	**199 234 210**	**199 234 220**	4.600
New 4	100	10	11000	**199 234 211**	**199 234 221**	5.800

Inch	D [mm]	H [mm]	H1 [mm]	H2 [mm]	H4 [mm]	H5 [mm]	L [mm]	L1 [mm]	L2 [mm]	L4 [mm]	L5 [mm]	L6 [mm]	L7 [mm]	z [mm]
⅜	50	167	27	62	40	97	92	194	56	25	261	76	48	60
½	50	167	27	62	40	97	95	194	56	25	261	76	48	60
¾	58	176	30	71	40	97	110	194	65	25	261	76	48	69
1	68	176	36	71	40	97	123	194	71	25	261	76	48	75
1 ¼	84	210	44	84	51	115	146	224	85	45	305	95	59	89
1 ½	97	210	51	84	51	115	157	224	89	45	305	95	59	97
2	124	232	64	106	51	115	183	224	101	45	305	95	59	110
New 2 ½	166	257	85	156		66	233	144	136	70	190	60		144
New 3	200	274	105	168		70	254	152	141	70	198	65		151
New 4	238	273	123	175		78	301	169	164	120	235	72		174

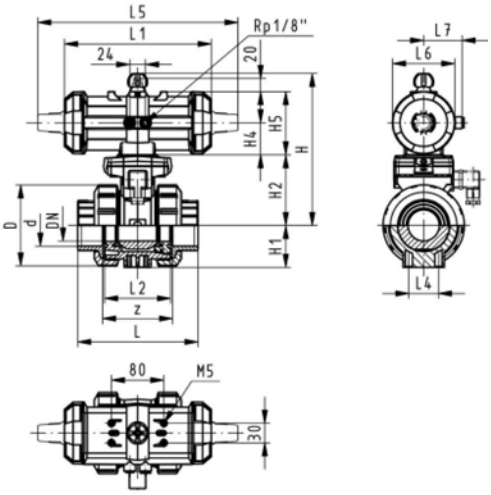

Copiable
Configurator GF Ball Valve Type 546 PVC-U

You will find a large selection of different versions in our range of products. New system elements also provide you with new opportunities for use. In order for us to supply exactly the ball valve you need for your application, we put together a selection menu for you (the maximum working pressure of the whole valve is determined by the maximum permissible nominal pressure
of the connecting part).

Ball valve
A01 Ball valve 546

Material
B01 PVC-U

Dimension

C05	d 16	DN 10	3/8"
C06	d 20	DN 15	1/2"
C07	d 25	DN 20	3/4"
C08	d 32	DN 25	1"
C09	d 40	DN 32	1 1/4"
C10	d 50	DN 40	1 1/2"
C11	d 63	DN 50	2"
C12	d 75	DN 65	2 1/2"
C13	d 90	DN 80	3"
C14	d 110	DN 100	4"
C15	d 160	DN 150	6"

Version
D01 standard, PTFE ball seal
D02 oilfree, PTFE ball seal (only with specific connecting parts)
D03 silicon-free, PTFE ball seal for inch ASTM (only with specific connecting parts)
D04 silicon-free, PVDF ball seal for metric (only with specific connecting parts)

Seals
E01 EPDM seals
E02 FPM seals
E03 FFPM (KALREZ©) seals

Threaded inserts
F01 without threaded inserts
F02 with threaded inserts

Connecting parts
G01 PVC-U Cement socket metric
G03 PVC-U Cement socket inch ASTM
G04 PVC-U Cement socket inch BS
G05 PVC-U Cement spigot metric
G06 PVC-U Threaded socket Rp
G07 PVC-U Threaded socket Rp reinforced (DN10-50)
G09 PVC-U Threaded socket NPT
G30 PP-H Fusion socket metric
G32 PP-H Socket fusion spigot metric
G33 PP-H Threaded socket Rp
G34 PP-H Threaded socket NPT reinforced
G35 PP-H Butt fusion spigot SDR 11 metric IR-PLUS
G36 PP-H Butt fusion spigot SDR 17.6 metric (limited dimension range)
G37 PP-H Butt fusion spigot long SDR11 metric
G40 PE-100 Fusion socket metric
G41 PE-100 Butt fusion spigot SDR11 metric
G42 PE-100 Butt fusion spigot SDR17.6 metric (limited dimension range)
G43 PE-100 Butt fusion spigot long SDR11 metric
G44 PE-100 Butt fusion spigot long SDR17.6 metric (DN65-100)
G60 Fixed flange PVC-U serrated metric
G61 Fixed flange PVC-U flat metric
G70 Backing flange PVC-U metric
G71 Backing flange PVC-U inch ANSI
G72 Backing flange PP-steel metric
G73 Backing flange PP-steel ANSI
G78 Backing flange PVC-U JIS (DN65-100)
G80 PVC-U Valve end blank

Multi-functional module
I01 No multi-functional module
I02 Empty module
I03 Module with 2 limit switches Ag, Ni
I04 Module with 2 limit switches Au
I05 Module with 2 inductive switches Namur
I06 Module with 2 inductive switches PNP
I07 Module with 2 inductive switches NPN

Handle
K01 Standard handle red
K02 Standard handle black
K11 Multi-functional handle red

Mounting plate
L01 without mounting plate
L02 with mounting plate

A01	B01	C	D	E	F	G	G	I	K	L
						left	right			

Copiable
GF ball valve type 546 with pneumatic actuator

It's so easy to configurate the type 546:
With the configurator, you have a choice of new pneumatic actuators PA11 and PA21 in 2 optimized sizes including a large range of accessories.

We supply what you put together.

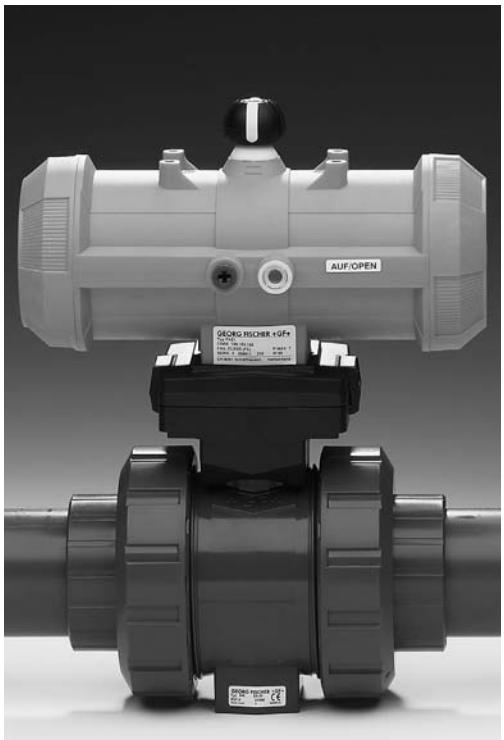

Pneumatic actuators PA11/PA21
P01 Fail safe to close PA11/PA21
P02 Fail safe to open PA11/21
P03 Double acting PA11/21
P30 Fail safe to close PA30/90
P31 Fail safe to open PA30/90
P32 Double acting PA30/90

Manual override
Q01 without manual override
Q02 with manual override

Stroke limiter
R01 without stroke limiter
R02 with stroke limiter

P	Q	R	

Ball valves

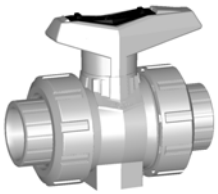

DN10/15 - 50

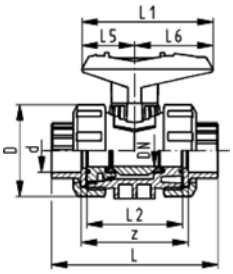

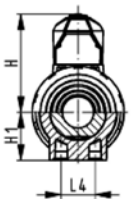

Ball valve type 546 PVC-C
With solvent cement sockets metric

Model:

- Image and drawing DN65-100 please see **New product ball valve DN65-100**
- For easy installation and removal
- z-dimension, valve end and valve nut are **not compatible** with type 346 (DN10/15-50) resp. type 370 (DN65-100)
- Ball seals PTFE
- Without mounting inserts

Option:

- Individual configuration of the valve (see form)
- Multifunctional module with integrated limit switches
- Pneumatic or electric actuators from +GF+

d [mm]	DN [mm]	PN	kv-value (Δp=1 bar) [l/min]	EPDM Code	FPM Code	kg
16	10	16	71	**163 546 001**	**163 546 011**	0.160
20	15	16	185	**163 546 002**	**163 546 012**	0.160
25	20	16	350	**163 546 003**	**163 546 013**	0.245
32	25	16	700	**163 546 004**	**163 546 014**	0.365
40	32	16	1000	**163 546 005**	**163 546 015**	0.660
50	40	16	1600	**163 546 006**	**163 546 016**	0.890
63	50	16	3100	**163 546 007**	**163 546 017**	1.650
New 75	65	16	5000	**163 546 008**	**163 546 018**	5.300
New 90	80	16	7000	**163 546 009**	**163 546 019**	8.000
New 110	100	16	11000	**163 546 010**	**163 546 020**	12.700

d [mm]	D [mm]	H [mm]	H1 [mm]	L [mm]	L1 [mm]	L2 [mm]	L4 [mm]	L5 [mm]	L6 [mm]	z [mm]
16	50	57	27	92	77	56	25	32	45	64
20	50	57	27	95	77	56	25	32	45	64
25	58	67	30	110	97	65	25	39	58	72
32	68	73	36	123	97	71	25	39	58	79
40	84	90	44	146	128	85	45	54	74	94
50	97	97	51	157	128	89	45	54	74	95
63	124	116	64	183	152	101	45	66	87	107
New 75	166	149	85	233	270	136	70	64	206	144
New 90	200	161	105	254	270	141	70	64	206	151
New 110	238	178	123	301	320	164	120	64	256	174

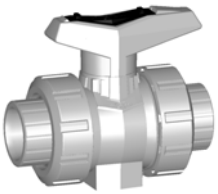

DN10/15 - 50

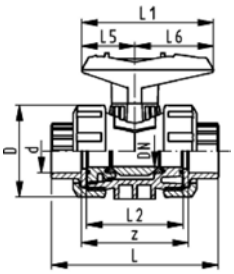

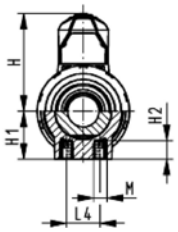

Ball valve type 546 PVC-C
With mounting inserts
With solvent cement sockets metric

Model:

- Image and drawing DN65-100 please see **New product ball valve DN65-100**
- For easy installation and removal
- z-dimension, valve end and valve nut are **not compatible** with type 346 (DN10/15-50) resp. type 370 (DN65-100)
- Ball seals PTFE
- Integrated stainless steel mounting inserts

Option:

- Individual configuration of the valve (see form)
- Multifunctional module with integrated limit switches
- Pneumatic or electric actuators from +GF+

d [mm]	DN [mm]	PN	kv-value (Δp=1 bar) [l/min]	EPDM Code	FPM Code	kg
16	10	16	71	**163 546 061**	**163 546 071**	0.160
20	15	16	185	**163 546 062**	**163 546 072**	0.160
25	20	16	350	**163 546 063**	**163 546 073**	0.245
32	25	16	700	**163 546 064**	**163 546 074**	0.365
40	32	16	1000	**163 546 065**	**163 546 075**	0.660
50	40	16	1600	**163 546 066**	**163 546 076**	0.890
63	50	16	3100	**163 546 067**	**163 546 077**	1.650
New 75	65	16	5000	**163 546 068**	**163 546 078**	5.300
New 90	80	16	7000	**163 546 069**	**163 546 079**	8.000
New 110	100	16	11000	**163 546 070**	**163 546 080**	12.700

d [mm]	D [mm]	H [mm]	H1 [mm]	H2 [mm]	L [mm]	L1 [mm]	L2 [mm]	L4 [mm]	L5 [mm]	L6 [mm]	M	z [mm]
16	50	57	27	12	92	77	56	25	32	45	M6	64
20	50	57	27	12	95	77	56	25	32	45	M6	64
25	58	67	30	12	110	97	65	25	39	58	M6	72
32	68	73	36	12	123	97	71	25	39	58	M6	79
40	84	90	44	15	146	128	85	45	54	74	M8	94
50	97	97	51	15	157	128	89	45	54	74	M8	95
63	124	116	64	15	183	152	101	45	66	87	M8	107
New 75	166	149	85	15	233	270	136	70	64	206	M8	144
New 90	200	161	105	15	254	270	141	70	64	206	M8	151
New 110	238	178	123	22	301	320	164	120	64	256	M12	174

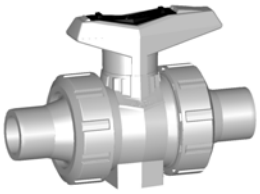

DN10/15 - 50

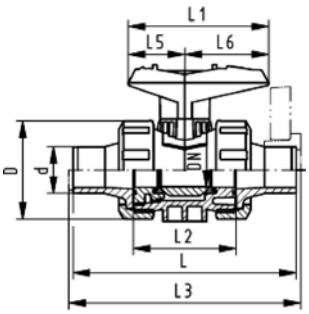

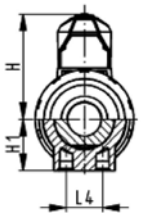

Ball valve type 546 PVC-C
With solvent cement spigots metric

Model:

- Image and drawing DN65-100 please see **New product ball valve DN65-100**
- For easy installation and removal
- z-dimension, valve end and valve nut are **not compatible** with type 346 (DN10/15-50) resp. type 370 (DN65-100)
- Ball seals PTFE
- Without mounting inserts

Option:

- Individual configuration of the valve (see form)
- Multifunctional module with integrated limit switches
- Pneumatic or electric actuators from +GF+

d [mm]	DN [mm]	PN	kv-value (Δp=1 bar) [l/min]	EPDM Code	FPM Code	kg
16	10	16	71	**163 546 041**	**163 546 051**	0.160
20	15	16	185	**163 546 042**	**163 546 052**	0.160
25	20	16	350	**163 546 043**	**163 546 053**	0.245
32	25	16	700	**163 546 044**	**163 546 054**	0.365
40	32	16	1000	**163 546 045**	**163 546 055**	0.660
50	40	16	1600	**163 546 046**	**163 546 056**	0.890
63	50	16	3100	**163 546 047**	**163 546 057**	1.650
New 75	65	16	5000	**163 546 048**	**163 546 058**	5.500
New 90	80	16	7000	**163 546 049**	**163 546 059**	8.200
New 110	100	16	11000	**163 546 050**	**163 546 060**	12.900

d [mm]	D [mm]	H [mm]	H1 [mm]	L [mm]	L1 [mm]	L2 [mm]	L3 [mm]	L4 [mm]	L5 [mm]	L6 [mm]
16	50	57	27	114	77	56		25	32	45
20	50	57	27	124	77	56	130	25	32	45
25	58	67	30	144	97	65	150	25	39	58
32	68	73	36	154	97	71	160	25	39	58
40	84	90	44	174	128	85	180	45	54	74
50	97	97	51	194	128	89	200	45	54	74
63	124	116	64	224	152	101	230	45	66	87
New 75	166	149	85	284	270	136	290	70	64	206
New 90	200	161	105	300	270	141	310	70	64	206
New 110	238	178	123	340	320	164	350	120	64	256

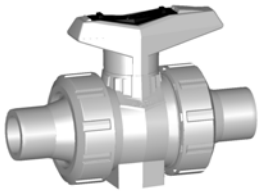

DN10/15 - 50

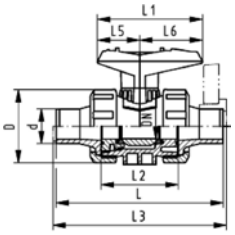

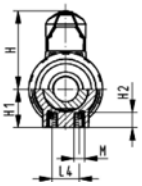

Ball valve type 546 PVC-C
With mounting inserts
With solvent cement spigots metric

Model:

- Image and drawing DN65-100 please see **New product ball valve DN65-100**
- For easy installation and removal
- z-dimension, valve end and valve nut are **not compatible** with type 346 (DN10/15-50) resp. type 370 (DN65-100)
- Ball seals PTFE
- Integrated stainless steel mounting inserts

Option:

- Individual configuration of the valve (see form)
- Multifunctional module with integrated limit switches
- Pneumatic or electric actuators from +GF+

d [mm]	DN [mm]	PN	kv-value (Δp=1 bar) [l/min]	EPDM Code	FPM Code	kg
16	10	16	71	**163 546 381**	**163 546 391**	0.162
20	15	16	185	**163 546 382**	**163 546 392**	0.162
25	20	16	350	**163 546 383**	**163 546 393**	0.247
32	25	16	700	**163 546 384**	**163 546 394**	0.367
40	32	16	1000	**163 546 385**	**163 546 395**	0.665
50	40	16	1600	**163 546 386**	**163 546 396**	0.895
63	50	16	3100	**163 546 387**	**163 546 397**	1.655
New 75	65	16	5000	**163 546 388**	**163 546 398**	5.500
New 90	80	16	7000	**163 546 389**	**163 546 399**	8.200
New 110	100	16	11000	**163 546 390**	**163 546 400**	12.900

d [mm]	D [mm]	H [mm]	H1 [mm]	H2 [mm]	L [mm]	L1 [mm]	L2 [mm]	L3 [mm]	L4 [mm]	L5 [mm]	L6 [mm]	M
16	50	57	27	12	114	77	56		25	32	45	M6
20	50	57	27	12	124	77	56	130	25	32	45	M6
25	58	67	30	12	144	97	65	150	25	39	58	M6
32	68	73	36	12	154	97	71	160	25	39	58	M6
40	84	90	44	15	174	128	85	180	45	54	74	M8
50	97	97	51	15	194	128	89	200	45	54	74	M8
63	124	116	64	15	224	152	101	230	45	66	87	M8
New 75	166	149	85	15	284	270	136	290	70	64	206	M8
New 90	200	161	105	15	300	270	141	310	70	64	206	M8
New 110	238	178	123	22	340	320	164	350	120	64	256	M12

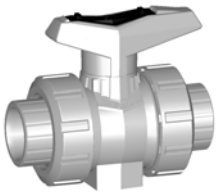

DN10/15 - 50

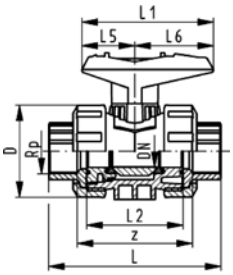

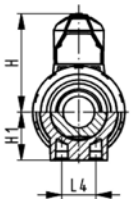

Ball valve type 546 PVC-C
With threaded sockets Rp

Model:

- Image and drawing DN65-100 please see **New product ball valve DN65-100**
- For easy installation and removal
- z-dimension, valve end and valve nut are **not compatible** with type 346 (DN10/15-50) resp. type 370 (DN65-100)
- Ball seals PTFE
- Without mounting inserts

Option:

- Individual configuration of the valve (see form)
- Multifunctional module with integrated limit switches
- Pneumatic or electric actuators from +GF+

Rp [inch]	DN [mm]	PN	kv-value (Δp=1 bar) [l/min]	EPDM Code	FPM Code	kg
⅜	10	10	71	**163 546 021**	**163 546 031**	0.160
½	15	10	185	**163 546 022**	**163 546 032**	0.160
¾	20	10	350	**163 546 023**	**163 546 033**	0.245
1	25	10	700	**163 546 024**	**163 546 034**	0.365
1 ¼	32	10	1000	**163 546 025**	**163 546 035**	0.660
1 ½	40	10	1600	**163 546 026**	**163 546 036**	0.890
2	50	10	3100	**163 546 027**	**163 546 037**	1.650
New 2 ½	65	10	5000	**163 546 028**	**163 546 038**	5.400
New 3	80	10	7000	**163 546 029**	**163 546 039**	8.100
New 4	100	10	11000	**163 546 030**	**163 546 040**	12.700

Rp [inch]	D [mm]	H [mm]	H1 [mm]	L [mm]	L1 [mm]	L2 [mm]	L4 [mm]	L5 [mm]	L6 [mm]	z [mm]
⅜	50	57	27	95	77	56	25	32	45	69
½	50	57	27	100	77	56	25	32	45	67
¾	58	67	30	114	97	65	25	39	58	78
1	68	73	36	127	97	71	25	39	58	85
1 ¼	84	90	44	146	128	85	45	54	74	100
1 ½	97	97	51	152	128	89	45	54	74	106
2	124	116	64	177	152	101	45	66	87	121
New 2 ½	166	149	85	233	270	136	70	64	206	144
New 3	200	161	105	254	270	141	70	64	206	151
New 4	238	178	123	301	320	164	120	64	256	174

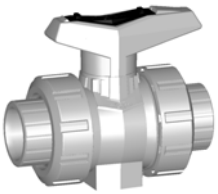

DN10/15 - 50

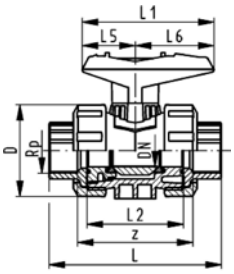

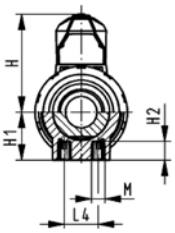

Ball valve type 546 PVC-C
With mounting inserts
With threaded sockets Rp

Model:

- Image and drawing DN65-100 please see **New product ball valve DN65-100**
- For easy installation and removal
- z-dimension, valve end and valve nut are **not compatible** with type 346 (DN10/15-50) resp. type 370 (DN65-100)
- Ball seals PTFE
- Integrated stainless steel mounting inserts

Option:

- Individual configuration of the valve (see form)
- Multifunctional module with integrated limit switches
- Pneumatic or electric actuators from +GF+

Rp [inch]	DN [mm]	PN	kv-value (Δp=1 bar) [l/min]	EPDM Code	FPM Code	kg
⅜	10	10	71	**163 546 401**	**163 546 411**	0.162
½	15	10	185	**163 546 402**	**163 546 412**	0.162
¾	20	10	350	**163 546 403**	**163 546 413**	0.247
1	25	10	700	**163 546 404**	**163 546 414**	0.367
1 ¼	32	10	1000	**163 546 405**	**163 546 415**	0.665
1 ½	40	10	1600	**163 546 406**	**163 546 416**	0.895
2	50	10	3100	**163 546 407**	**163 546 417**	1.655
New 2 ½	65	10	5000	**163 546 408**	**163 546 418**	5.400
New 3	80	10	7000	**163 546 409**	**163 546 419**	8.100
New 4	100	10	11000	**163 546 410**	**163 546 420**	12.700

Rp [inch]	D [mm]	H [mm]	H1 [mm]	H2 [mm]	L [mm]	L1 [mm]	L2 [mm]	L4 [mm]	L5 [mm]	L6 [mm]	M	z [mm]
⅜	50	57	27	12	95	77	56	25	32	45	M6	69
½	50	57	27	12	100	77	56	25	32	45	M6	67
¾	58	67	30	12	114	97	65	25	39	58	M6	78
1	68	73	36	12	127	97	71	25	39	58	M6	85
1 ¼	84	90	44	12	146	128	85	45	54	74	M8	100
1 ½	97	97	51	15	152	128	89	45	54	74	M8	106
2	124	116	64	15	177	152	101	45	66	87	M8	121
New 2 ½	166	149	85	15	233	270	136	70	64	206	M8	144
New 3	200	161	105	15	254	270	141	70	64	206	M8	151
New 4	238	178	123	22	301	320	164	120	64	256	M12	174

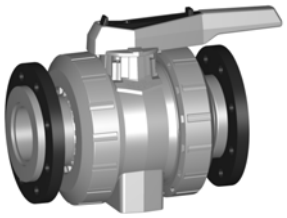

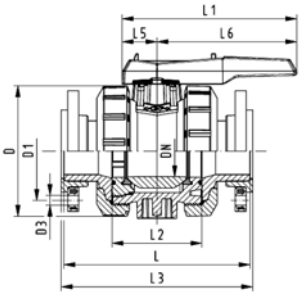

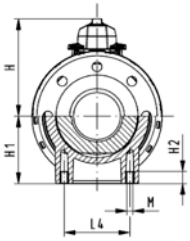

Ball valve type 546 PVC-C
With mounting inserts
With backing flanges PP-st metric

Model:

- Image and drawing DN65-100 please see **New product ball valve DN65-100**
- For easy installation and removal
- z-dimension, valve end and valve nut are **not compatible** with type 346 (DN10/15-50) resp. type 370 (DN65-100)
- Ball seals PTFE
- Integrated stainless steel mounting inserts
- Overall length according to EN 558-1
- Connecting dimensions: ISO 7005, EN 1092, BS 4504, DIN 2501; bolt circle PN 10

Option:

- Individual configuration of the valve (see form)
- Multifunctional module with integrated limit switches
- Pneumatic or electric actuators from +GF+

d [mm]	DN [mm]	PN	kv-value (Δp=1 bar) [l/min]	EPDM Code	FPM Code	kg
New 75	65	16	5000	**163 546 108**	**163 546 118**	6.000
New 90	80	16	7000	**163 546 109**	**163 546 119**	9.100
New 110	100	16	11000	**163 546 110**	**163 546 120**	14.200

d [mm]	D [mm]	D1 [mm]	D3 [mm]	L [mm]	L1 [mm]	L2 [mm]	L3 [mm]	L4 [mm]	L5 [mm]	L6 [mm]	H [mm]	H1 [mm]	M
New 75	166	145	18	284	270	136	290	70	64	206	149	85	8
New 90	200	160	18	300	270	141	310	70	64	206	161	105	8
New 110	238	180	18	340	320	164	350	120	64	256	178	123	12

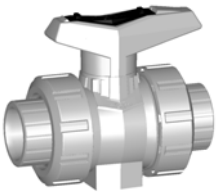

DN10/15 - 50

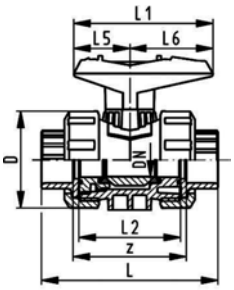

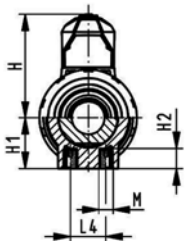

Ball valve type 546 PVC-C
With mounting inserts
With solvent cement sockets Inch ASTM
Including 2 threaded union ends NPT

Model:

- Image and drawing DN65-100 please see **New product ball valve DN65-100**
- For easy installation and removal
- Ball seals PTFE
- z-dimension, valve end and valve nut are **not compatible** with type 346 (DN10/15-50) resp. type 370 (DN65-100)
- Integrated stainless steel mounting inserts

Option:

- Individual configuration of the valve (see form)
- Multifunctional module with integrated limit switches
- Pneumatic or electric actuators from +GF+

Inch	DN [mm]	PN	kv-value (Δp=1 bar) [l/min]	EPDM Code	FPM Code	kg
⅜	10	16	71	**163 546 341**	**163 546 351**	0.194
½	15	16	185	**163 546 342**	**163 546 352**	0.204
¾	20	16	350	**163 546 343**	**163 546 353**	0.304
1	25	16	700	**163 546 344**	**163 546 354**	0.464
1 ¼	32	16	1000	**163 546 345**	**163 546 355**	0.810
1 ½	40	16	1600	**163 546 346**	**163 546 356**	1.105
2	50	16	3100	**163 546 347**	**163 546 357**	2.005

Inch	D [mm]	H [mm]	H1 [mm]	L [mm]	L1 [mm]	L2 [mm]	L4 [mm]	L5 [mm]	L6 [mm]	M	z [mm]
⅜	50	57	27	105	77	56	25	32	45	M6	67
½	50	57	27	105	77	56	25	32	45	M6	61
¾	58	67	30	121	97	65	25	39	58	M6	70
1	68	73	36	133	97	71	25	39	58	M6	76
1 ¼	84	90	44	154	128	85	45	54	74	M8	90
1 ½	97	97	51	164	128	89	45	54	74	M8	94
2	124	116	64	183	152	101	45	66	87	M8	107

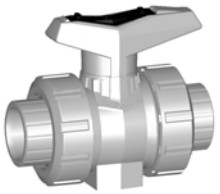

DN10/15 - 50

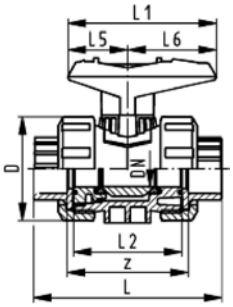

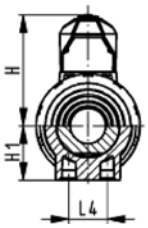

Ball valve type 546 PVC-C
With solvent cement sockets Inch ASTM
Including 2 threaded union ends NPT

Model:

- For easy installation and removal
- z-dimension, valve end and valve nut are **not compatible** with type 346 (DN10/15-50) resp. type 370 (DN65-100)
- Ball seals PTFE
- Without mounting inserts
- Threaded valve ends are only enclosed for DN10/15-50

Option:

- Individual configuration of the valve (see form)
- Multifunctional module with integrated limit switches
- Pneumatic or electric actuators from +GF+

Inch	DN [mm]	PN	kv-value (Δp=1 bar) [l/min]	EPDM Code	FPM Code	kg
⅜	10	16	71	**163 546 301**	**163 546 311**	0.190
½	15	16	185	**163 546 302**	**163 546 312**	0.200
¾	20	16	350	**163 546 303**	**163 546 313**	0.300
1	25	16	700	**163 546 304**	**163 546 314**	0.460
1 ¼	32	16	1000	**163 546 305**	**163 546 315**	0.800
1 ½	40	16	1600	**163 546 306**	**163 546 316**	1.095
2	50	16	3100	**163 546 307**	**163 546 317**	1.995
New 2 ½	65	16	5000	**163 546 308**	**163 546 318**	5.400
New 3	80	16	7000	**163 546 309**	**163 546 319**	8.100
New 4	100	16	11000	**163 546 310**	**163 546 320**	12.800

Inch	D [mm]	H [mm]	H1 [mm]	L [mm]	L1 [mm]	L2 [mm]	L4 [mm]	L5 [mm]	L6 [mm]	z [mm]
⅜	50	57	27	105	77	56	25	32	45	67
½	50	57	27	105	77	56	25	32	45	61
¾	58	67	30	121	97	65	25	39	58	70
1	68	73	36	133	97	71	25	39	58	76
1 ¼	84	90	44	154	128	85	45	54	74	90
1 ½	97	97	51	164	128	89	45	54	74	94
2	124	116	64	183	152	101	45	66	87	107
New 2 ½	166	149	85	233	270	136	70	64	206	144
New 3	200	161	105	254	270	141	70	64	206	151
New 4	238	178	123	301	320	164	120	64	256	174

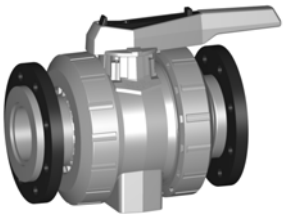

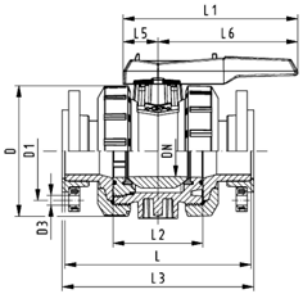

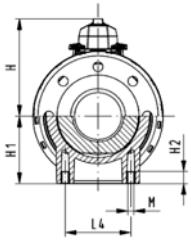

Ball valve type 546 PVC-C
With mounting inserts
With backing flanges PP-st Inch/ANSI

Model:

- Image and drawing DN65-100 please see **New product ball valve DN65-100**
- For easy installation and removal
- z-dimension, valve end and valve nut are **not compatible** with type 346 (DN10/15-50) resp. type 370 (DN65-100)
- Ball seals PTFE
- Integrated stainless steel mounting inserts
- Overall length according to EN 558-1
- Connecting dimension ANSI/ASME B 16.5 / ASTM D 4024

Option:

- Individual configuration of the valve (see form)
- Multifunctional module with integrated limit switches
- Pneumatic or electric actuators from +GF+

Inch	DN [mm]	PN	kv-value (Δp=1 bar) [l/min]	EPDM Code	FPM Code	kg
New 2 ½	65	16	5000	**163 546 168**	**163 546 178**	6.000
New 3	80	16	7000	**163 546 169**	**163 546 179**	9.100
New 4	100	16	11000	**163 546 170**	**163 546 180**	14.200

Inch	D [mm]	D1 [mm]	D3 [mm]	L [mm]	L1 [mm]	L2 [mm]	L3 [mm]	L4 [mm]	L5 [mm]	L6 [mm]	H [mm]	H1 [mm]	M
New 2 ½	166	140	19	284	270	136	290	70	64	206	149	85	8
New 3	200	152	19	300	270	141	310	70	64	206	161	105	8
New 4	238	191	19	340	320	164	350	120	64	256	178	123	12

DN10/15 - 50

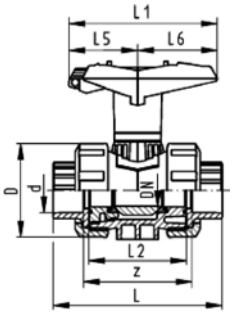

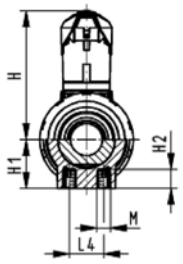

Ball valve type 546 PVC-C
With lockable handle
With solvent cement sockets metric

Model:

- Image and drawing DN65-100 please see **New product ball valve DN65-100**
- For easy installation and removal
- z-dimension, valve end and valve nut are **not compatible** with type 346 (DN10/15-50) resp. type 370 (DN65-100)
- Ball seals PTFE
- Integrated stainless steel mounting inserts
- Lockable hand lever with ratchet settings

Option:

- Individual configuration of the valve (see form)
- Multifunctional module with integrated limit switches
- Pneumatic or electric actuators from +GF+

d [mm]	DN [mm]	PN	kv-value (Δp=1 bar) [l/min]	EPDM Code	FPM Code	kg
16	10	16	71	**163 546 081**	**163 546 091**	0.175
20	15	16	185	**163 546 082**	**163 546 092**	0.175
25	20	16	350	**163 546 083**	**163 546 093**	0.270
32	25	16	700	**163 546 084**	**163 546 094**	0.390
40	32	16	1000	**163 546 085**	**163 546 095**	0.700
50	40	16	1600	**163 546 086**	**163 546 096**	0.930
63	50	16	3100	**163 546 087**	**163 546 097**	1.695
New 75	65	16	5000	**163 546 088**	**163 546 098**	-
New 90	80	16	7000	**163 546 089**	**163 546 099**	-
New 110	100	16	11000	**163 546 090**	**163 546 100**	-

d [mm]	D [mm]	H [mm]	H1 [mm]	H2 [mm]	L [mm]	L1 [mm]	L2 [mm]	L4 [mm]	L5 [mm]	L6 [mm]	M	z [mm]
16	50	79	27	12	92	87	56	25	42	45	M6	64
20	50	79	27	12	95	87	56	25	42	45	M6	64
25	58	88	30	12	110	108	65	25	50	58	M6	72
32	68	94	36	12	123	108	71	25	50	58	M6	79
40	84	113	44	15	146	140	85	45	66	75	M8	94
50	97	119	51	15	157	140	89	45	66	75	M8	95
63	124	141	64	15	183	165	101	45	78	87	M8	107
New 75	166	224	85	15	233	270	136	70	64	206	M8	144
New 90	200	235	105	15	254	270	141	70	64	206	M8	151
New 110	238	245	123	22	301	320	164	120	64	256	M12	174

DN10/15 - 50

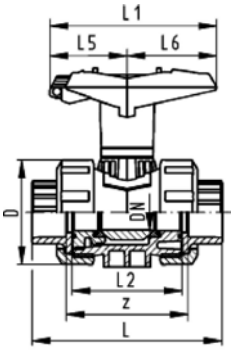

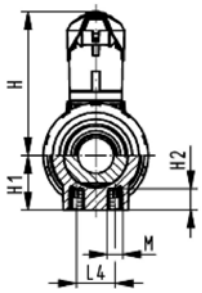

Ball valve type 546 PVC-C
With lockable handle
With solvent cement sockets Inch ASTM
Including 2 threaded union ends NPT

Model:

- For easy installation and removal
- z-dimension, valve end and valve nut are **not compatible** with type 346 (DN10/15-50) resp. type 370 (DN65-100)
- Ball seals PTFE
- Integrated stainless steel mounting inserts
- Lockable hand lever with ratchet settings
- Threaded valve ends are only enclosed for DN10/15-50

Option:

- Individual configuration of the valve (see form)
- Multifunctional module with integrated limit switches
- Pneumatic or electric actuators from +GF+

Inch	DN [mm]	PN	kv-value (Δp=1 bar) [l/min]	EPDM Code	FPM Code	kg
⅜	10	16	71	**163 546 361**	**163 546 371**	0.205
½	15	16	185	**163 546 362**	**163 546 372**	0.215
¾	20	16	350	**163 546 363**	**163 546 373**	0.325
1	25	16	700	**163 546 364**	**163 546 374**	0.485
1 ¼	32	16	1000	**163 546 365**	**163 546 375**	0.840
1 ½	40	16	1600	**163 546 366**	**163 546 376**	1.135
2	50	16	3100	**163 546 367**	**163 546 377**	2.035
New 2 ½	65	16	5000	**163 546 368**	**163 546 378**	5.800
New 3	80	16	7000	**163 546 369**	**163 546 379**	8.500
New 4	100	16	11000	**163 546 370**	**163 546 380**	13.100

Inch	D [mm]	H [mm]	H1 [mm]	H2 [mm]	L [mm]	L1 [mm]	L2 [mm]	L4 [mm]	L5 [mm]	L6 [mm]	M	z [mm]
⅜	50	79	27	12	105	87	56	25	42	45	M6	67
½	50	79	27	12	105	87	56	25	42	45	M6	61
¾	58	88	30	12	121	108	65	25	50	58	M6	70
1	68	94	36	12	133	108	71	25	50	58	M6	76
1 ¼	84	113	44	15	154	140	85	45	66	75	M8	90
1 ½	97	119	51	15	164	140	89	45	66	75	M8	94
2	124	141	64	15	183	165	101	45	78	87	M8	107
New 2 ½	166	224	85	15	233	270	136	70	64	206	M8	144
New 3	200	235	105	15	254	270	141	70	64	206	M8	151
New 4	238	245	123	22	301	320	164	120	64	256	M12	174

Ball valves

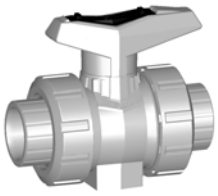

DN10/15 - 50

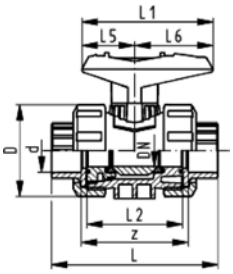

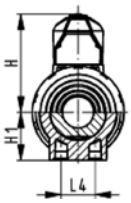

Ball valve type 546 PVC-C SF
With solvent cement sockets metric

Model:

- Image and drawing DN65-100 please see **New product ball valve DN65-100**
- Silicon-free / paint-compatible
- For easy installation and removal
- z-dimension, valve end and valve nut are **not compatible** with type 346 (DN10/15-50) resp. type 370 (DN65-100)
- Ball seals PVDF
- Without mounting inserts

Option:

- Individual configuration of the valve (see form)
- Multifunctional module with integrated limit switches

d [mm]	DN [mm]	PN	kv-value (Δp=1 bar) [l/min]	EPDM Code	FPM Code	kg
16	10	16	71	**163 546 601**	**163 546 611**	0.160
20	15	16	185	**163 546 602**	**163 546 612**	0.160
25	20	16	350	**163 546 603**	**163 546 613**	0.245
32	25	16	700	**163 546 604**	**163 546 614**	0.365
40	32	16	1000	**163 546 605**	**163 546 615**	0.660
50	40	16	1600	**163 546 606**	**163 546 616**	0.890
63	50	16	3100	**163 546 607**	**163 546 617**	1.650
New 75	65	16	5000	**163 546 608**	**163 546 618**	5.400
New 90	80	16	7000	**163 546 609**	**163 546 619**	8.100
New 110	100	16	11000	**163 546 610**	**163 546 620**	12.800

d [mm]	D [mm]	H [mm]	H1 [mm]	L [mm]	L1 [mm]	L2 [mm]	L4 [mm]	L5 [mm]	L6 [mm]	z [mm]
16	50	57	27	92	77	56	25	32	45	64
20	50	57	27	95	77	56	25	32	45	64
25	58	67	30	110	97	65	25	39	58	72
32	68	73	36	123	97	71	25	39	58	79
40	84	90	44	146	128	85	45	54	74	94
50	97	97	51	157	128	89	45	54	74	95
63	124	116	64	183	152	101	45	66	87	107
New 75	166	149	85	233	270	136	70	64	206	144
New 90	200	161	105	254	270	141	70	64	206	151
New 110	238	178	123	301	320	164	120	64	256	174

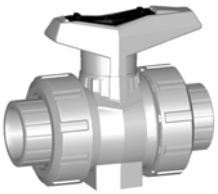

DN10/15 - 50

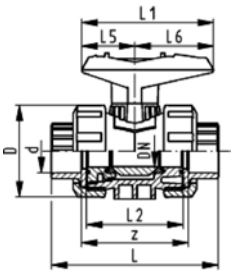

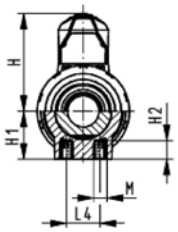

Ball valve type 546 PVC-C SF
With mounting inserts
With solvent cement sockets metric

Model:

- Image and drawing DN65-100 please see **New product ball valve DN65-100**
- Silicon-free / paint-compatible
- For easy installation and removal
- z-dimension, valve end and valve nut are **not compatible** with type 346 (DN10/15-50) resp. type 370 (DN65-100)
- Ball seals PVDF
- Integrated stainless steel mounting inserts

Option:

- Individual configuration of the valve (see form)
- Multifunctional module with integrated limit switches

d [mm]	DN [mm]	PN	kv-value (Δp=1 bar) [l/min]	EPDM Code	FPM Code	kg
16	10	16	71	**800 000 621**	**800 000 631**	0.160
20	15	16	185	**800 000 622**	**800 000 632**	0.160
25	20	16	350	**800 000 623**	**800 000 633**	0.245
32	25	16	700	**800 000 624**	**800 000 634**	0.365
40	32	16	1000	**800 000 625**	**800 000 635**	0.660
50	40	16	1600	**800 000 626**	**800 000 636**	0.890
63	50	16	3100	**800 000 627**	**800 000 637**	1.650
New 75	65	16	5000	**800 000 628**	**800 000 638**	5.400
New 90	80	16	7000	**800 000 629**	**800 000 639**	8.100
New 110	100	16	11000	**800 000 630**	**800 000 640**	12.800

d [mm]	D [mm]	H [mm]	H1 [mm]	H2 [mm]	L [mm]	L1 [mm]	L2 [mm]	L4 [mm]	L5 [mm]	L6 [mm]	M	z [mm]
16	50	57	27	12	92	77	56	25	32	45	M6	64
20	50	57	27	12	95	77	56	25	32	45	M6	64
25	58	67	30	12	110	97	65	25	39	58	M6	72
32	68	73	36	12	123	97	71	25	39	58	M6	79
40	84	90	44	15	146	128	85	45	54	74	M8	94
50	97	97	51	15	157	128	89	45	54	74	M8	95
63	124	116	64	15	183	152	101	45	66	87	M8	107
New 75	166	149	85	15	233	270	136	70	64	206	M8	144
New 90	200	161	105	15	254	270	141	70	64	206	M8	151
New 110	238	178	123	22	301	320	164	120	64	256	M12	174

Ball valves

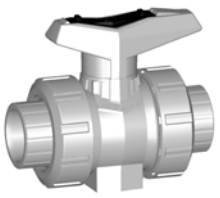

DN10/15 - 50

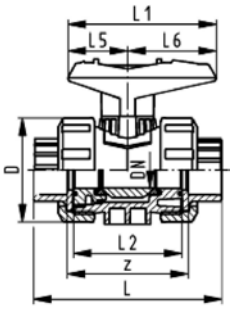

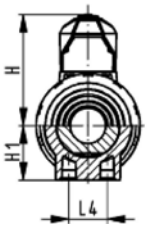

Ball valve type 546 PVC-C SF
With solvent cement sockets Inch ASTM

Model:

- Image and drawing DN65-100 please see **New product ball valve DN65-100**
- Silicon-free / paint-compatible
- For easy installation and removal
- z-dimension, valve end and valve nut are **not compatible** with type 346 (DN10/15-50) resp. type 370 (DN65-100)
- Ball seals: Inch ASTM in PTFE
- Without mounting inserts

Option:

- Individual configuration of the valve (see form)
- Multifunctional module with integrated limit switches

Inch	DN [mm]	PN	kv-value (Δp=1 bar) [l/min]	FPM Code	kg
½	15	16	185	**163 546 692**	0.160
¾	20	16	350	**163 546 693**	0.245
1	25	16	700	**163 546 694**	0.365
1 ¼	32	16	1000	**163 546 695**	0.660
1 ½	40	16	1600	**163 546 696**	0.890
2	50	16	3100	**163 546 697**	1.650
New 2 ½	65	16	5000	**163 546 698**	5.300
New 3	80	16	7000	**163 546 699**	7.900
New 4	100	16	11000	**163 546 700**	12.600

Inch	D [mm]	H [mm]	H1 [mm]	L [mm]	L1 [mm]	L2 [mm]	L4 [mm]	L5 [mm]	L6 [mm]	z [mm]
½	50	57	27	105	77	56	25	32	45	61
¾	58	67	30	121	97	65	25	39	58	70
1	68	73	36	133	97	71	25	39	58	76
1 ¼	84	90	44	154	128	85	45	54	74	90
1 ½	97	97	51	164	128	89	45	54	74	94
2	124	116	64	183	152	101	45	66	87	107
New 2 ½	166	149	85	233	270	136	70	64	206	144
New 3	200	161	105	254	270	141	70	64	206	151
New 4	238	178	123	301	320	164	120	64	256	174

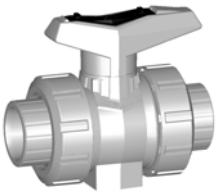

DN10/15 - 50

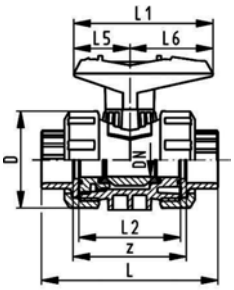

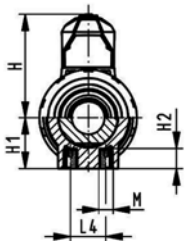

Ball valve type 546 PVC-C SF
With mounting inserts
With solvent cement sockets Inch ASTM

Model:

- Integrated stainless steel mounting inserts
- Silicon-free / paint-compatible
- Ball seals:
- - inch ASTM: PTFE
- For easy installation and removal
- z-dimension, valve end and valve nut are **not compatible** with type 346 (DN10/15-50) resp. type 370 (DN65-100)
- Without mounting inserts

Option:

- Individual configuration of the valve (see form)
- Multifunctional module with integrated limit switches

Inch	DN [mm]	PN	kv-value (Δp=1 bar) [l/min]	EPDM Code	FPM Code	kg
½	15	16	185	**163 546 842**	**163 546 852**	0.164
¾	20	16	350	**163 546 843**	**163 546 853**	0.249
1	25	16	700	**163 546 844**	**163 546 854**	0.369
1 ¼	32	16	1000	**163 546 845**	**163 546 855**	0.670
1 ½	40	16	1600	**163 546 846**	**163 546 856**	0.900
2	50	16	3100	**163 546 847**	**163 546 857**	1.660

Inch	D [mm]	H [mm]	H1 [mm]	H2 [mm]	L [mm]	L1 [mm]	L2 [mm]	L4 [mm]	L5 [mm]	L6 [mm]	M	z [mm]
½	50	57	27	12	105	77	56	25	32	45	6	61
¾	58	67	30	12	121	97	65	25	39	58	6	70
1	68	73	36	12	133	97	71	25	39	58	6	76
1 ¼	84	90	44	15	154	128	85	45	54	74	8	90
1 ½	97	97	51	15	164	128	89	45	54	74	8	94
2	124	116	64	15	183	152	101	45	66	87	8	107

Copiable
Configurator GF ball valve type 546 PVC-C

You will find a large selection of different versions in our range of products. New system elements also provide you with new opportunities for use. In order for us to supply exactly the ball valve you need for you application, we have created a selection menu for you.
We supply what you put together.

Ball Valve
A01 Ball Valve 546

Material
B02 PVC-C

Dimension
C05 DN 10 3/8"
C06 DN 15 1/2"
C07 DN 20 3/4"
C08 DN 25 1"
C09 DN 32 1 1/4"
C10 DN 40 1 1/2"
C11 DN 50 2"
C12 DN 65 2 1/2"
C13 DN 80 3"
C14 DN 100 4"

Version
D01 Standard, PTFE ball seal
D02 oilfree, PTFE ball seal (only with specific connecting parts)
D03 silicon-free, PTFE ball seal (only with specific connecting parts)
D04 silicon-free, PVDF ball seal metric (only with specific connecting parts)

Seals
E01 EPDM seals
E02 FPM seals

Threaded inserts
F01 without threaded inserts
F02 with threaded inserts

Connecting parts
G11 PVC-C Cement socket metric
G12 PVC-C Cement socket JIS
G13 PVC-C Cement socket inch ASTM
G14 PVC-C Cement spigot metric
G15 PVC-C Threaded socket Rp
G16 PVC-C Threaded socket Rp reinforced (DN10-50)
G17 PVC-C Threaded socket NPT
G40 PE-100 Butt fusion metric
G41 PE-100 Butt fusion spigot SDR11 metric
G42 PE-100 Butt fusion spigot SDR17.6 metric (DN65-100)
G43 PE-100 Butt fusion spigot long SDR11 metric
G72 Backing flange PP-steel metric
G73 Backing flange PP-steel inch ANSI
G81 PVC-C Valve end blank

Multi-functional module
I01 No multi-functional module
I02 Empty module
I03 Module with 2 end switches Ag, Ni
I04 Module with 2 end switches Au
I05 Module with 2 inductive switches Namur
I06 Module with 2 inductive switches PNP
I07 Module with 2 inductive switches NPN

Lever
K01 Standard lever red
K02 Standard lever black
K11 Multi-functional lever red

Mounting plate
L01 without mounting plate
L02 with mounting plate

A01	B02	C	D	E	F	G	G	I	K	L
						left	right			

Ball valves electric

DN10/15 - 50

Ball valve type 107 PVC-C 100-230V
With manual emergency override
With solvent cement sockets metric

Model:

- Built on with electric actuator EA11
- Voltage 100-230 V, 50-60 Hz
- Control range 90°<)
- Control time 5 s/90°<)
- For easy installation and removal
- Integrated stainless steel mounting inserts

Option:

- Individual configuration of the valve (see form)

d [mm]	DN [mm]	PN	kv-value (Δp=1 bar) [l/min]	EPDM Code	FPM Code	kg
16	10	10	70	**199 107 102**	**199 107 112**	1.770
20	15	10	185	**199 107 103**	**199 107 113**	1.780
25	20	10	350	**199 107 104**	**199 107 114**	1.860
32	25	10	700	**199 107 105**	**199 107 115**	1.950
40	32	10	1000	**199 107 106**	**199 107 116**	2.190
50	40	10	1600	**199 107 107**	**199 107 117**	2.360
63	50	10	3100	**199 107 108**	**199 107 118**	3.140

d [mm]	D [mm]	H [mm]	H1 [mm]	H2 [mm]	H3 [mm]	H5 [mm]	L [mm]	L1 [mm]	L2 [mm]	L4 [mm]	L5 [mm]	L6 [mm]	L7 [mm]	L8 [mm]	z [mm]
16	50	200	27	64	64	137	92	161	56	25	77	83	122	33	64
20	50	200	27	64	64	137	95	161	56	25	77	83	122	33	64
25	58	209	30	73	64	137	110	161	65	25	77	83	122	33	72
32	68	209	36	73	64	137	123	161	71	25	77	83	122	33	79
40	84	220	44	64	64	137	146	161	85	45	77	83	122	33	94
50	97	220	51	84	64	137	157	161	89	45	77	83	122	33	95
63	124	243	64	106	64	137	183	161	101	45	77	83	122	33	107

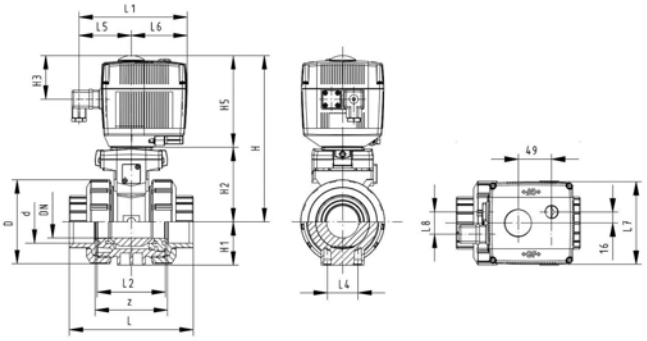

DN10/15 - 50

Ball valve type 107 PVC-C 24V
With manual emergency override
With solvent cement sockets metric

Model:

- Built on with electric actuator EA11
- Voltage 24 V AC/DC
- Control range 90°<)
- Control time 5 s/90°<)
- For easy installation and removal
- Integrated stainless steel mounting inserts

Option:

- Individual configuration of the valve (see form)

d [mm]	DN [mm]	PN	kv-value (Δp=1 bar) [l/min]	EPDM Code	FPM Code	kg
16	10	10	70	**199 107 142**	**199 107 152**	1.770
20	15	10	185	**199 107 143**	**199 107 153**	1.780
25	20	10	350	**199 107 144**	**199 107 154**	1.860
32	25	10	700	**199 107 145**	**199 107 155**	1.950
40	32	10	1000	**199 107 146**	**199 107 156**	2.190
50	40	10	1600	**199 107 147**	**199 107 157**	2.360
63	50	10	3100	**199 107 148**	**199 107 158**	3.140

d [mm]	D [mm]	H [mm]	H1 [mm]	H2 [mm]	H3 [mm]	H5 [mm]	L [mm]	L1 [mm]	L2 [mm]	L4 [mm]	L5 [mm]	L6 [mm]	L7 [mm]	L8 [mm]	z [mm]
16	50	200	27	64	64	137	92	161	56	25	77	83	122	33	64
20	50	200	27	64	64	137	95	161	56	25	77	83	122	33	64
25	58	209	30	73	64	137	110	161	65	25	77	83	122	33	72
32	68	209	36	73	64	137	123	161	71	25	77	83	122	33	79
40	84	220	44	84	64	137	146	161	85	45	77	83	122	33	94
50	97	220	51	84	64	137	157	161	89	45	77	83	122	33	95
63	124	243	64	106	64	137	183	161	101	45	77	83	122	33	107

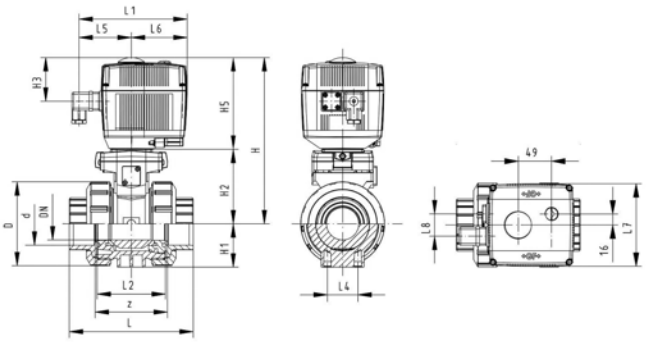

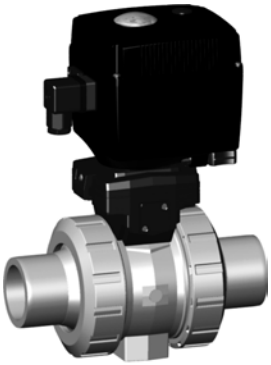

DN10/15 - 50

Ball valve type 107 PVC-C 100-230V
With manual emergency override
With solvent cement spigots metric

Model:

- Built on with electric actuator EA11
- Voltage 100-230 V, 50-60 Hz
- Control range 90°<)
- Control time 5 s/90°<)
- For easy installation and removal
- Integrated stainless steel mounting inserts

Option:

- Individual configuration of the valve (see form)

d [mm]	DN [mm]	PN	kv-value (Δp=1 bar) [l/min]	EPDM Code	FPM Code	kg
16	10	10	70	**199 107 122**	**199 107 132**	1.770
20	15	10	185	**199 107 123**	**199 107 133**	1.780
25	20	10	350	**199 107 124**	**199 107 134**	1.860
32	25	10	700	**199 107 125**	**199 107 135**	1.950
40	32	10	1000	**199 107 126**	**199 107 136**	2.190
50	40	10	1600	**199 107 127**	**199 107 137**	2.360
63	50	10	3100	**199 107 128**	**199 107 138**	3.140

d [mm]	D [mm]	H [mm]	H1 [mm]	H2 [mm]	H3 [mm]	H5 [mm]	L [mm]	L1 [mm]	L2 [mm]	L3 [mm]	L4 [mm]	L5 [mm]	L6 [mm]	L7 [mm]	L8 [mm]
16	50	200	27	64	64	137	114	161	56	130	25	77	83	122	33
20	50	200	27	64	64	137	124	161	56	130	25	77	83	122	33
25	58	209	30	73	64	137	144	161	65	150	25	77	83	122	33
32	68	209	36	73	64	137	154	161	71	160	25	77	83	122	33
40	84	220	44	84	64	137	174	161	85	180	45	77	83	122	33
50	97	220	51	84	64	137	194	161	89	200	45	77	83	122	33
63	124	243	64	106	64	137	224	161	101	230	45	77	83	122	33

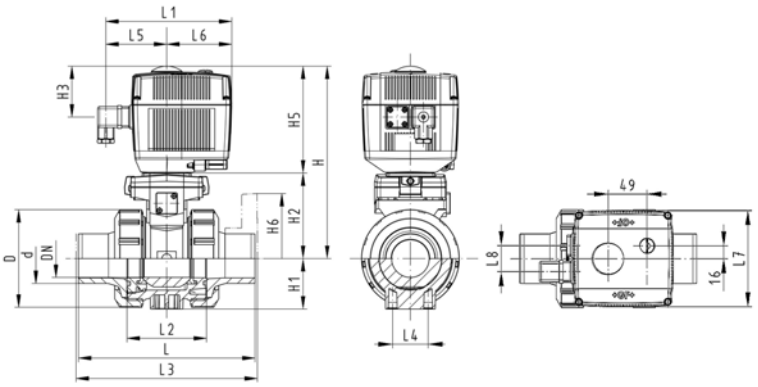

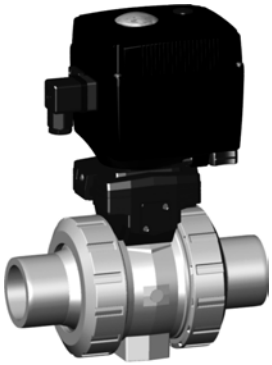

DN10/15 - 50

Ball valve type 107 PVC-C 24V
With manual emergency override
With solvent cement spigots metric

Model:

- Built on with electric actuator EA11
- Voltage 24 V AC/DC
- Control range 90°<)
- Control time 5 s/90°<)
- For easy installation and removal
- Integrated stainless steel mounting inserts

Option:

- Individual configuration of the valve (see form)

d [mm]	DN [mm]	PN	kv-value (Δp=1 bar) [l/min]	EPDM Code	FPM Code	kg
16	10	10	70	**199 107 162**	**199 107 172**	1.770
20	15	10	185	**199 107 163**	**199 107 173**	1.780
25	20	10	350	**199 107 164**	**199 107 174**	1.860
32	25	10	700	**199 107 165**	**199 107 175**	1.950
40	32	10	1000	**199 107 166**	**199 107 176**	2.190
50	40	10	1600	**199 107 167**	**199 107 177**	2.360
63	50	10	3100	**199 107 168**	**199 107 178**	3.140

d [mm]	D [mm]	H [mm]	H1 [mm]	H2 [mm]	H3 [mm]	H5 [mm]	L [mm]	L1 [mm]	L2 [mm]	L3 [mm]	L4 [mm]	L5 [mm]	L6 [mm]	L7 [mm]	L8 [mm]
16	50	200	27	64	64	137	114	161	56	130	25	77	83	122	33
20	50	200	27	64	64	137	124	161	56	130	25	77	83	122	33
25	58	209	30	73	64	137	144	161	65	150	25	77	83	122	33
32	68	209	36	73	64	137	154	161	71	160	25	77	83	122	33
40	84	220	44	84	64	137	174	161	85	180	45	77	83	122	33
50	97	220	51	84	64	137	194	161	89	200	45	77	83	122	33
63	124	243	64	106	64	137	224	161	101	230	45	77	83	122	33

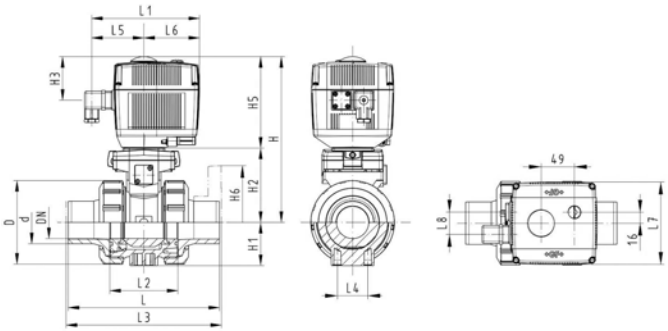

DN10/15 - 50

Ball valve type 107 PVC-C 100-230V
With manual emergency override
With threaded sockets Rp

Model:

- Built on with electric actuator EA11
- Voltage 100-230 V, 50-60 Hz
- Control range 90°<)
- Control time 5 s/90°<)
- For easy installation and removal
- Integrated stainless steel mounting inserts

Option:

- Individual configuration of the valve (see form)

Rp [inch]	DN [mm]	PN	kv-value (Δp=1 bar) [l/min]	EPDM Code	FPM Code	kg
⅜	10	10	70	**199 107 702**	**199 107 712**	2.100
½	15	10	185	**199 107 703**	**199 107 713**	2.100
¾	20	10	350	**199 107 704**	**199 107 714**	2.200
1	25	10	700	**199 107 705**	**199 107 715**	2.300
1 ¼	32	10	1000	**199 107 706**	**199 107 716**	2.600
1 ½	40	10	1600	**199 107 707**	**199 107 717**	3.000
2	50	10	3100	**199 107 708**	**199 107 718**	3.800

Rp [inch]	D [mm]	H [mm]	H1 [mm]	H2 [mm]	H3 [mm]	H5 [mm]	L [mm]	L1 [mm]	L2 [mm]	L4 [mm]	L5 [mm]	L6 [mm]	L7 [mm]	L8 [mm]	z [mm]
⅜	50	200	27	64	64	137	92	161	56	25	77	83	122	33	64
½	50	200	27	64	64	137	95	161	56	25	77	83	122	33	64
¾	58	209	30	73	64	137	110	161	65	25	77	83	122	33	72
1	68	209	36	73	64	137	123	161	71	25	77	83	122	33	79
1 ¼	84	220	44	84	64	137	146	161	85	45	77	83	122	33	94
1 ½	97	220	51	84	64	137	157	161	89	45	77	83	122	33	95
2	124	243	64	106	64	137	183	161	101	45	77	83	122	33	107

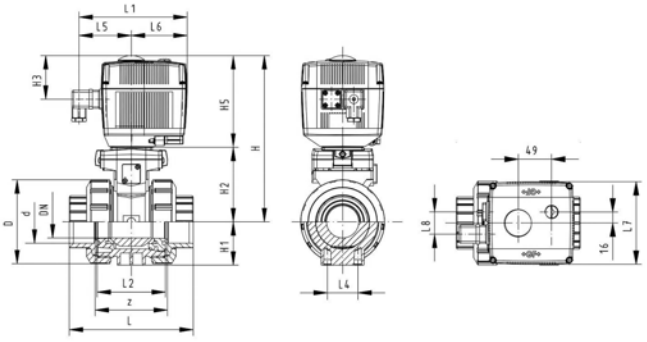

DN10/15 - 50

Ball valve type 107 PVC-C 24V
With manual emergency override
With threaded sockets Rp

Model:

- Built on with electric actuator EA11
- Voltage 24 V AC/DC
- Control range 90°<)
- Control time 5 s/90°<)
- For easy installation and removal
- Integrated stainless steel mounting inserts

Option:

- Individual configuration of the valve (see form)

Rp [inch]	DN [mm]	PN	kv-value (Δp=1 bar) [l/min]	EPDM Code	FPM Code	kg
⅜	10	10	70	**199 107 742**	**199 107 752**	2.100
½	15	10	185	**199 107 743**	**199 107 753**	2.100
¾	20	10	350	**199 107 744**	**199 107 754**	2.200
1	25	10	700	**199 107 745**	**199 107 755**	2.300
1 ¼	32	10	1000	**199 107 746**	**199 107 756**	2.600
1 ½	40	10	1600	**199 107 747**	**199 107 757**	3.000
2	50	10	3100	**199 107 748**	**199 107 758**	3.800

Rp [inch]	D [mm]	H [mm]	H1 [mm]	H2 [mm]	H3 [mm]	H5 [mm]	L [mm]	L1 [mm]	L2 [mm]	L4 [mm]	L5 [mm]	L6 [mm]	L7 [mm]	L8 [mm]	z [mm]
⅜	50	200	27	64	64	137	92	161	56	25	77	83	122	33	64
½	50	200	27	64	64	137	95	161	56	25	77	83	122	33	64
¾	58	209	30	73	64	137	110	161	65	25	77	83	122	33	72
1	68	209	36	73	64	137	123	161	71	25	77	83	122	33	79
1 ¼	84	220	44	84	64	137	146	161	85	45	77	83	122	33	94
1 ½	97	220	51	84	64	137	157	161	89	45	77	83	122	33	95
2	124	243	64	106	64	137	183	161	101	45	77	83	122	33	107

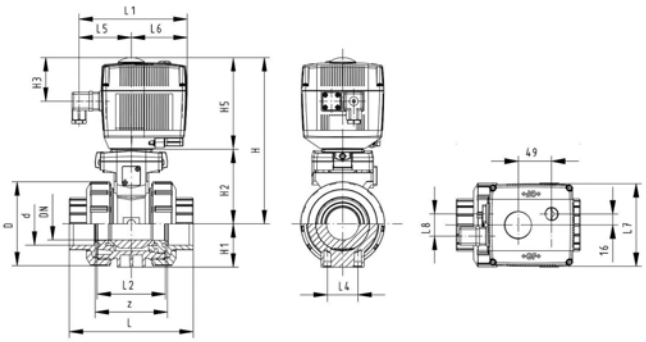

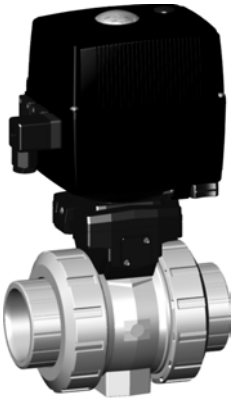

DN10/15 - 50

Ball valve type 130 PVC-C 100-230V
With manual emergency override
With solvent cement sockets metric

Model:

- Assignment of actuators EA21 (DN10/15-50), EA31 (DN65-100 if available)
- Image and drawing DN65-100 please see **New product ball valve DN65-100**
- For easy installation and removal
- Integrated stainless steel mounting inserts
- Voltage 100-230 V, 50-60 Hz
- Control range 90°<)
- Control time: EA21: 5s/90°<), EA31: 15s/90°<)

Option:

- Individual configuration of the valve (see form)

d [mm]	DN [mm]	PN	kv-value (Δp=1 bar) [l/min]	EPDM Code	FPM Code	kg
16	10	10	70	**199 130 402**	**199 130 412**	2.100
20	15	10	185	**199 130 403**	**199 130 413**	2.100
25	20	10	350	**199 130 404**	**199 130 414**	2.200
32	25	10	700	**199 130 405**	**199 130 415**	2.300
40	32	10	1000	**199 130 406**	**199 130 416**	2.600
50	40	10	1600	**199 130 407**	**199 130 417**	3.000
63	50	10	3100	**199 130 408**	**199 130 418**	3.800
New 75	65	10	5000	**199 130 409**	**199 130 419**	4.000
New 90	80	10	7000	**199 130 410**	**199 130 420**	5.100
New 110	100	10	11000	**199 130 411**	**199 130 421**	6.700

d [mm]	D [mm]	H [mm]	H1 [mm]	H2 [mm]	H3 [mm]	H5 [mm]	L [mm]	L1 [mm]	L2 [mm]	L4 [mm]	L5 [mm]	L6 [mm]	L7 [mm]	z [mm]
16	50	231	27	64	94	167	92	180	56	25	97	83	122	64
20	50	231	27	64	94	167	95	180	56	25	97	83	122	64
25	58	240	30	73	94	167	110	180	65	25	97	83	122	72
32	68	240	36	73	94	167	123	180	71	25	97	83	122	79
40	84	251	44	84	94	167	146	180	85	45	97	83	122	94
50	97	251	51	84	94	167	157	180	89	45	97	83	122	95
63	124	273	64	106	94	167	183	180	101	45	97	83	122	107
New 75	166	346	85	156	94	190	233	180	136	70	98	83	122	144
New 90	200	358	105	168	94	190	254	180	141	70	98	83	122	151
New 110	238	365	123	175	94	190	301	180	164	120	98	83	122	174

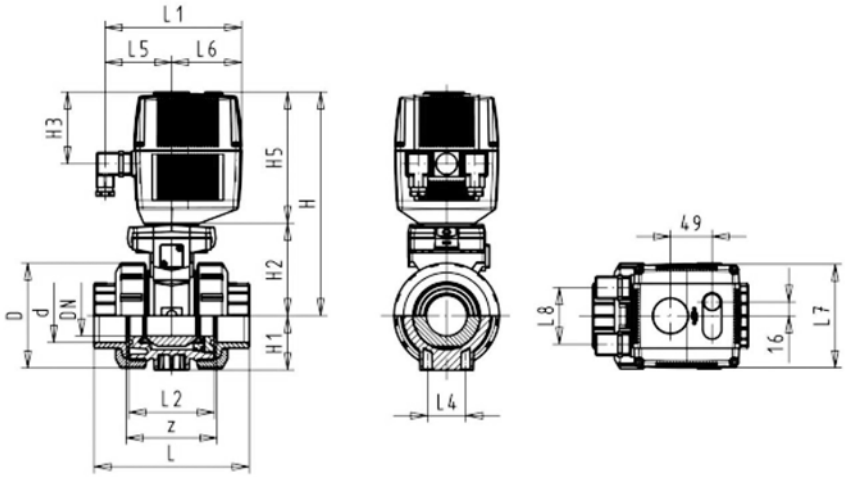

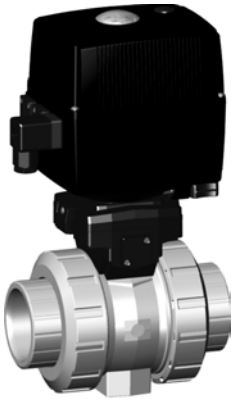

DN10/15 - 50

Ball valve type 130 PVC-C 24V
With manual emergency override
With solvent cement sockets metric

Model:

- Assignment of actuators EA21 (DN10/15-50), EA31 (DN65-100 if available)
- Image and drawing DN65-100 please see **New product ball valve DN65-100**
- For easy installation and removal
- Integrated stainless steel mounting inserts
- Voltage 24 V AC/DC
- Control range 90°<)
- Control time: EA21: 5s/90°<), EA31: 15s/90°<)

Option:

- Individual configuration of the valve (see form)

d [mm]	DN [mm]	PN	kv-value (Δp=1 bar) [l/min]	EPDM Code	FPM Code	kg
16	10	10	70	**199 130 442**	**199 130 452**	2.100
20	15	10	185	**199 130 443**	**199 130 453**	2.100
25	20	10	350	**199 130 444**	**199 130 454**	2.200
32	25	10	700	**199 130 445**	**199 130 455**	2.300
40	32	10	1000	**199 130 446**	**199 130 456**	2.600
50	40	10	1600	**199 130 447**	**199 130 457**	3.000
63	50	10	3100	**199 130 448**	**199 130 458**	3.800
New 75	65	10	5000	**199 130 449**	**199 130 459**	4.000
New 90	80	10	7000	**199 130 450**	**199 130 460**	5.100
New 110	100	10	11000	**199 130 451**	**199 130 461**	6.700

d [mm]	D [mm]	H [mm]	H1 [mm]	H2 [mm]	H3 [mm]	H5 [mm]	L [mm]	L1 [mm]	L2 [mm]	L4 [mm]	L5 [mm]	L6 [mm]	L7 [mm]	z [mm]
16	50	231	27	64	94	167	92	180	56	25	97	83	122	64
20	50	231	27	64	94	167	95	180	56	25	97	83	122	64
25	58	240	30	73	94	167	110	180	65	25	97	83	122	72
32	68	240	36	73	94	167	123	180	71	25	97	83	122	79
40	84	251	44	84	94	167	146	180	85	45	97	83	122	94
50	97	251	51	84	94	167	157	180	89	45	97	83	122	95
63	124	273	64	106	94	167	183	180	101	45	97	83	122	107
New 75	166	346	85	156	94	190	233	180	136	70	98	83	122	144
New 90	200	358	105	168	94	190	254	180	141	70	98	83	122	151
New 110	238	365	123	175	94	190	301	180	164	120	98	83	122	174

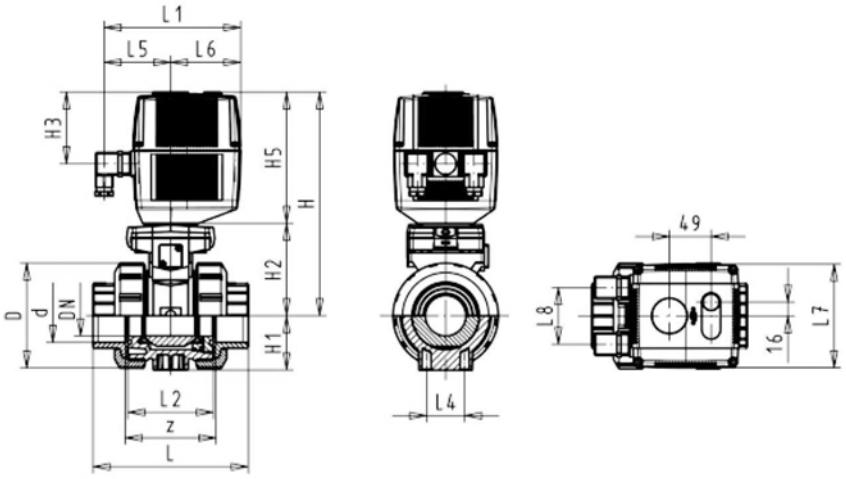

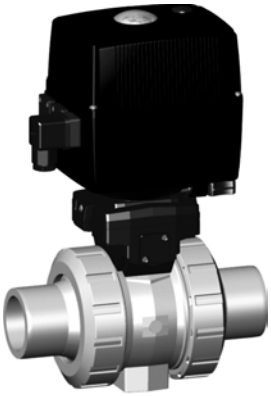

DN10/15 - 50

Ball valve type 130 PVC-C 100-230V
With manual emergency override
With solvent cement spigots metric

Model:

- Assignment of actuators EA21 (DN10/15-50), EA31 (DN65-100 if available)
- Image and drawing DN65-100 please see **New product ball valve DN65-100**
- For easy installation and removal
- Integrated stainless steel mounting inserts
- Voltage 100-230 V, 50-60 Hz
- Control range 90°<)
- Control time: EA21: 5s/90°<), EA31: 15s/90°<)

Option:

- Individual configuration of the valve (see form)

d [mm]	DN [mm]	PN	kv-value (Δp=1 bar) [l/min]	EPDM Code	FPM Code	kg
16	10	10	70	**199 130 422**	**199 130 432**	2.100
20	15	10	185	**199 130 423**	**199 130 433**	2.100
25	20	10	350	**199 130 424**	**199 130 434**	2.200
32	25	10	700	**199 130 425**	**199 130 435**	2.300
40	32	10	1000	**199 130 426**	**199 130 436**	2.600
50	40	10	1600	**199 130 427**	**199 130 437**	3.000
63	50	10	3100	**199 130 428**	**199 130 438**	3.800
New 75	65	10	5000	**199 130 429**	**199 130 439**	4.200
New 90	80	10	7000	**199 130 430**	**199 130 440**	5.300
New 110	100	10	11000	**199 130 431**	**199 130 441**	6.900

d [mm]	D [mm]	H [mm]	H1 [mm]	H2 [mm]	H3 [mm]	H5 [mm]	L [mm]	L1 [mm]	L2 [mm]	L3 [mm]	L4 [mm]	L5 [mm]	L6 [mm]	L7 [mm]
16	50	231	27	64	94	167	114	180	56	130	25	97	83	122
20	50	231	27	64	94	167	124	180	56	130	25	97	83	122
25	58	240	30	73	94	167	144	180	65	150	25	97	83	122
32	68	240	36	73	94	167	154	180	71	160	25	97	83	122
40	84	251	44	84	94	167	174	180	85	180	45	97	83	122
50	97	251	51	84	94	167	194	180	89	200	45	97	83	122
63	124	273	64	106	94	167	224	180	101	230	45	97	83	122
New 75	166	346	85	156	94	190	284	180	136	290	70	98	83	122
New 90	200	358	105	168	94	190	300	180	141	310	70	98	83	122
New 110	238	365	123	175	94	190	340	180	164	350	120	98	83	122

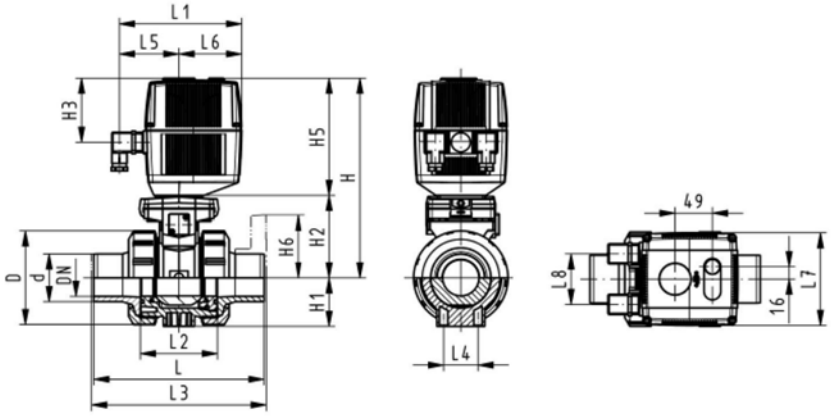

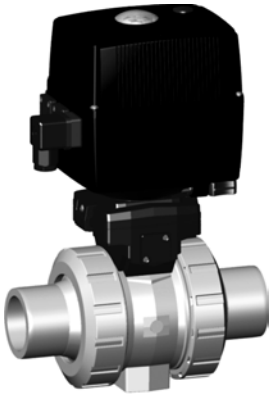

DN10/15 - 50

Ball valve type 130 PVC-C 24V
With manual emergency override
With solvent cement spigots metric

Model:

- Assignment of actuators EA21 (DN10/15-50), EA31 (DN65-100 if available)
- Image and drawing DN65-100 please see **New product ball valve DN65-100**
- For easy installation and removal
- Integrated stainless steel mounting inserts
- Voltage 24 V AC/DC
- Control range 90°<)
- Control time: EA21: 5s/90°<), EA31: 15s/90°<)

Option:

- Individual configuration of the valve (see form)

d [mm]	DN [mm]	PN	kv-value (Δp=1 bar) [l/min]	EPDM Code	FPM Code	kg
16	10	10	70	**199 130 462**	**199 130 472**	2.100
20	15	10	185	**199 130 463**	**199 130 473**	2.100
25	20	10	350	**199 130 464**	**199 130 474**	2.200
32	25	10	700	**199 130 465**	**199 130 475**	2.300
40	32	10	1000	**199 130 466**	**199 130 476**	2.600
50	40	10	1600	**199 130 467**	**199 130 477**	3.000
63	50	10	3100	**199 130 468**	**199 130 478**	3.800
New 75	65	10	5000	**199 130 469**	**199 130 479**	4.200
New 90	80	10	7000	**199 130 470**	**199 130 480**	5.300
New 110	100	10	11000	**199 130 471**	**199 130 481**	6.900

d [mm]	D [mm]	H [mm]	H1 [mm]	H2 [mm]	H3 [mm]	H5 [mm]	L [mm]	L1 [mm]	L2 [mm]	L3 [mm]	L4 [mm]	L5 [mm]	L6 [mm]	L7 [mm]
16	50	231	27	64	94	167	114	180	56	0	25	97	83	122
20	50	231	27	64	94	167	124	180	56	130	25	97	83	122
25	58	240	30	73	94	167	144	180	65	150	25	97	83	122
32	68	240	36	73	94	167	154	180	71	160	25	97	83	122
40	84	251	44	84	94	167	174	180	85	180	45	97	83	122
50	97	251	51	84	94	167	194	180	89	200	45	97	83	122
63	124	273	64	106	94	167	224	180	101	230	45	97	83	122
New 75	166	346	85	156	94	190	284	180	136	290	70	98	83	122
New 90	200	358	105	168	94	190	300	180	141	310	70	98	83	122
New 110	238	365	123	175	94	190	340	180	164	350	120	98	83	122

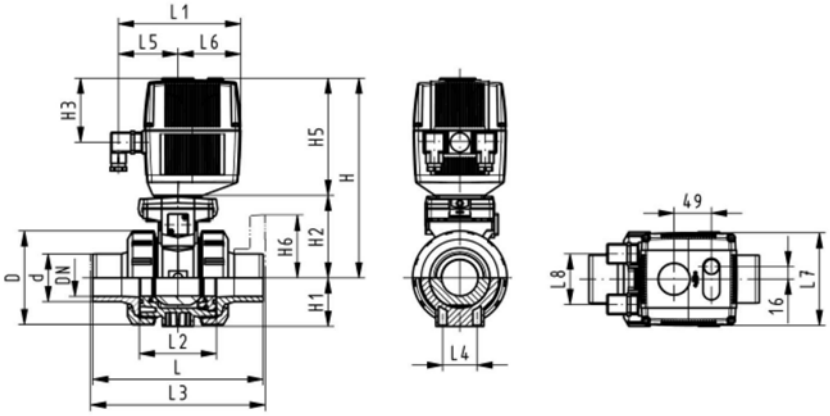

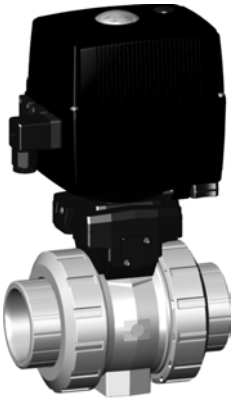

DN10/15 - 50

Ball valve type 130 PVC-C 100-230V
With manual emergency override
With threaded sockets Rp

Model:

- Assignment of actuators EA21 (DN10/15-50), EA31 (DN65-100 if available)
- Image and drawing DN65-100 please see **New product ball valve DN65-100**
- For easy installation and removal
- Integrated stainless steel mounting inserts
- Voltage 100-230 V, 50-60 Hz
- Control range 90°<)
- Control time: EA21: 5s/90°<), EA31: 15s/90°<)

Option:

- Individual configuration of the valve (see form)

Rp [inch]	DN [mm]	PN	kv-value (Δp=1 bar) [l/min]	EPDM Code	FPM Code	kg
⅜	10	10	70	**199 130 182**	**199 130 192**	2.100
½	15	10	185	**199 130 183**	**199 130 193**	2.100
¾	20	10	350	**199 130 184**	**199 130 194**	2.200
1	25	10	700	**199 130 185**	**199 130 195**	2.300
1 ¼	32	10	1000	**199 130 186**	**199 130 196**	2.600
1 ½	40	10	1600	**199 130 187**	**199 130 197**	3.000
2	50	10	3100	**199 130 188**	**199 130 198**	3.800
New 2 ½	65	10	5000	**199 130 189**	**199 130 199**	4.100
New 3	80	10	7000	**199 130 190**	**199 130 200**	5.200
New 4	100	10	11000	**199 130 191**	**199 130 201**	6.800

Rp [inch]	D [mm]	H [mm]	H1 [mm]	H2 [mm]	H3 [mm]	H5 [mm]	L [mm]	L1 [mm]	L2 [mm]	L4 [mm]	L5 [mm]	L6 [mm]	L7 [mm]	z [mm]
⅜	50	231	27	64	94	167	92	180	56	25	97	83	122	64
½	50	231	27	64	94	167	95	180	56	25	97	83	122	64
¾	58	240	30	73	94	167	110	180	65	25	97	83	122	72
1	68	240	36	73	94	167	123	180	71	25	97	83	122	79
1 ¼	84	251	44	84	94	167	146	180	85	45	97	83	122	94
1 ½	97	251	51	84	94	167	157	180	89	45	97	83	122	95
2	124	273	64	106	94	167	183	180	101	45	97	83	122	107
New 2 ½	166	346	85	156	94	190	233	180	136	70	98	83	122	144
New 3	200	358	105	168	94	190	254	180	141	70	98	83	122	151
New 4	238	365	123	175	94	190	301	180	164	120	98	83	122	174

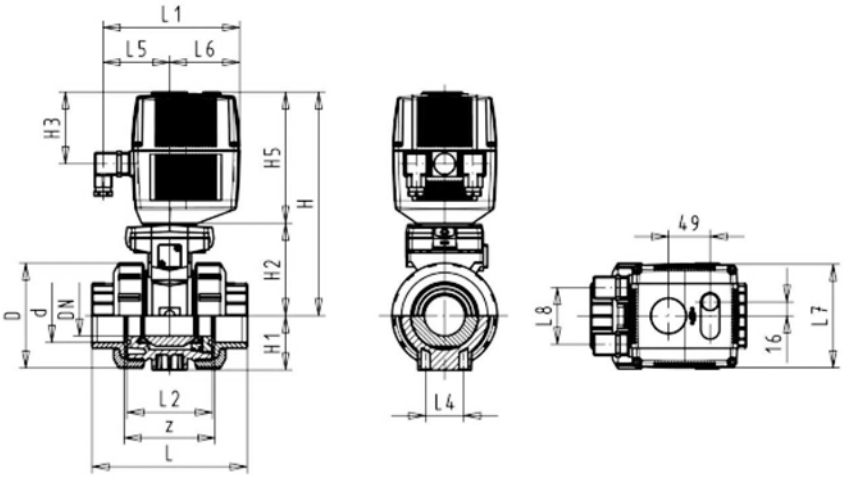

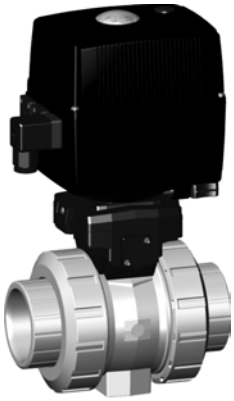

DN10/15 - 50

Ball valve type 130 PVC-C 24V
With manual emergency override
With threaded sockets Rp

Model:

- Assignment of actuators EA21 (DN10/15-50), EA31 (DN65-100 if available)
- Image and drawing DN65-100 please see **New product ball valve DN65-100**
- For easy installation and removal
- Integrated stainless steel mounting inserts
- Voltage 24 V AC/DC
- Control range 90°<)
- Control time: EA21: 5s/90°<), EA31: 15s/90°<)

Option:

- Individual configuration of the valve (see form)

Rp [inch]	DN [mm]	PN	kv-value (Δp=1 bar) [l/min]	EPDM Code	FPM Code	kg
⅜	10	10	70	**199 130 202**	**199 130 212**	2.100
½	15	10	185	**199 130 203**	**199 130 213**	2.100
¾	20	10	350	**199 130 204**	**199 130 214**	2.200
1	25	10	700	**199 130 205**	**199 130 215**	2.300
1 ¼	32	10	1000	**199 130 206**	**199 130 216**	2.600
1 ½	40	10	1600	**199 130 207**	**199 130 217**	3.000
2	50	10	3100	**199 130 208**	**199 130 218**	3.800
New 2 ½	65	10	5000	**199 130 209**	**199 130 219**	4.100
New 3	80	10	7000	**199 130 210**	**199 130 220**	5.200
New 4	100	10	11000	**199 130 211**	**199 130 221**	6.800

Rp [inch]	D [mm]	H [mm]	H1 [mm]	H2 [mm]	H3 [mm]	H5 [mm]	L [mm]	L1 [mm]	L2 [mm]	L4 [mm]	L5 [mm]	L6 [mm]	L7 [mm]	z [mm]
⅜	50	231	27	64	94	167	92	180	56	25	97	83	122	64
½	50	231	27	64	94	167	95	180	56	25	97	83	122	64
¾	58	240	30	73	94	167	110	180	65	25	97	83	122	72
1	68	240	36	73	94	167	123	180	71	25	97	83	122	79
1 ¼	84	251	44	84	94	167	146	180	85	45	97	83	122	94
1 ½	97	251	51	84	94	167	157	180	89	45	97	83	122	95
2	124	273	64	106	94	167	183	180	101	45	97	83	122	107
New 2 ½	166	346	85	156	94	190	233	180	136	70	98	83	122	144
New 3	200	358	105	168	94	190	254	180	141	70	98	83	122	151
New 4	238	365	123	175	94	190	301	180	164	120	98	83	122	174

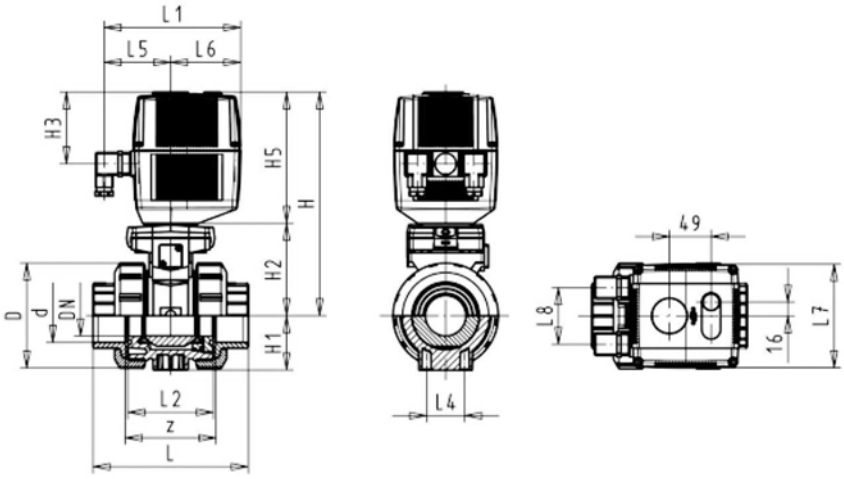

Ball valve type 130 PVC-C 100-230V
With manual emergency override
With backing flanges PP-st metric

Model:

- Assignment of actuators EA21 (DN10/15-50), EA31 (DN65-100 if available)
- Image and drawing DN65-100 please see **New product ball valve DN65-100**
- For easy installation and removal
- Integrated stainless steel mounting inserts
- Voltage 100-230 V, 50-60 Hz
- Control range 90°<)
- Control time: EA21: 5s/90°<), EA31: 15s/90°<)
- Overall length according to EN 558-1
- Connecting dimensions: ISO 7005, EN 1092, BS 4504, DIN 2501; bolt circle PN 10

Option:

- Individual configuration of the valve (see form)

d [mm]	DN [mm]	PN	kv-value (Δp=1 bar) [l/min]	EPDM Code	FPM Code	kg
New 75	65	10	5000	**199 134 489**	**199 134 499**	8.200
New 90	80	10	7000	**199 134 490**	**199 134 500**	10.100
New 110	100	10	11000	**199 134 491**	**199 134 501**	13.400

d [mm]	D [mm]	H [mm]	H1 [mm]	H2 [mm]	H3 [mm]	H5 [mm]	H6 [mm]	L [mm]	L1 [mm]	L2 [mm]	L3 [mm]	L4 [mm]	L5 [mm]	L6 [mm]
New 75	166	346	85	156	94	190	93	284	180	136	290	70	98	83
New 90	200	358	105	168	94	190	100	300	180	141	310	70	98	83
New 110	238	365	123	175	94	190	110	340	180	164	350	120	98	83

d [mm]	L7 [mm]	L8 [mm]
New 75	122	66
New 90	122	66
New 110	122	66

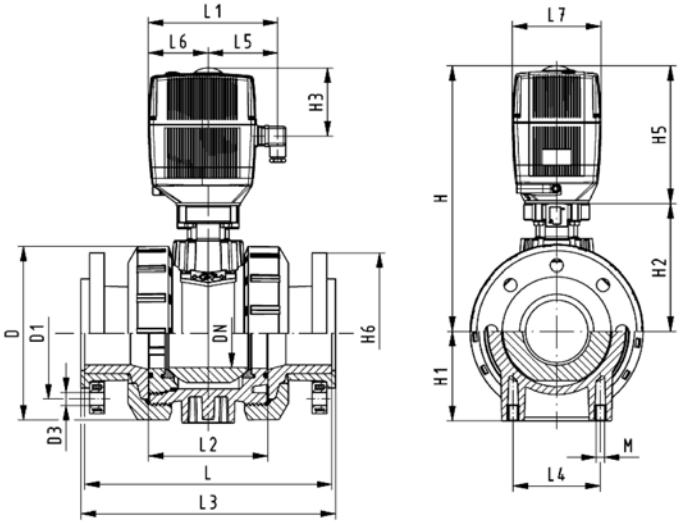

Ball valve type 130 PVC-C 24V
With manual emergency override
With backing flanges PP-st metric

Model:

- Assignment of actuators EA21 (DN10/15-50), EA31 (DN65-100 if available)
- Image and drawing DN65-100 please see **New product ball valve DN65-100**
- For easy installation and removal
- Integrated stainless steel mounting inserts
- Voltage 24 V AC/DC
- Control range 90°<)
- Control time: EA21: 5s/90°<), EA31: 15s/90°<)
- Overall length according to EN 558-1
- Connecting dimensions: ISO 7005, EN 1092, BS 4504, DIN 2501; bolt circle PN 10

Option:

- Individual configuration of the valve (see form)

d [mm]	DN [mm]	PN	kv-value (Δp=1 bar) [l/min]	EPDM Code	FPM Code	kg
New 75	65	10	5000	**199 134 509**	**199 134 519**	8.200
New 90	80	10	7000	**199 134 510**	**199 134 520**	10.100
New 110	100	10	11000	**199 134 511**	**199 134 521**	13.400

d [mm]	D [mm]	H [mm]	H1 [mm]	H2 [mm]	H3 [mm]	H5 [mm]	H6 [mm]	L [mm]	L1 [mm]	L2 [mm]	L3 [mm]	L4 [mm]	L5 [mm]	L6 [mm]
New 75	166	346	85	156	94	190	93	284	180	136	290	70	98	83
New 90	200	358	105	168	94	190	100	300	180	141	310	70	98	83
New 110	238	365	123	175	94	190	110	340	180	164	350	120	98	83

d [mm]	L7 [mm]	L8 [mm]
New 75	122	66
New 90	122	66
New 110	122	66

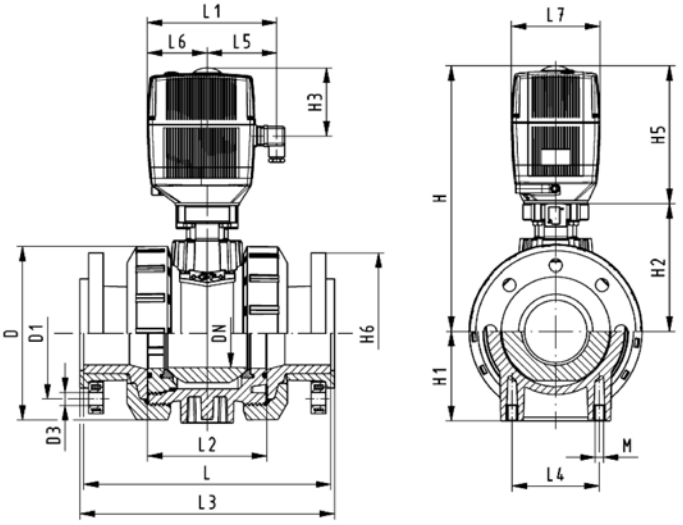

Copiable
Configurator GF ball valve type 546 PVC-C

You will find a large selection of different versions in our range of products. New system elements also provide you with new opportunities for use. In order for us to supply exactly the ball valve you need for you application, we have created a selection menu for you.
We supply what you put together.

Ball Valve
A01 Ball Valve 546

Material
B02 PVC-C

Dimension
C05 DN 10 3/8"
C06 DN 15 1/2"
C07 DN 20 3/4"
C08 DN 25 1"
C09 DN 32 1 1/4"
C10 DN 40 1 1/2"
C11 DN 50 2"
C12 DN 65 2 1/2"
C13 DN 80 3"
C14 DN 100 4"

Version
D01 Standard, PTFE ball seal
D02 oilfree, PTFE ball seal (only with specific connecting parts)
D03 silicon-free, PTFE ball seal (only with specific connecting parts)
D04 silicon-free, PVDF ball seal metric (only with specific connecting parts)

Seals
E01 EPDM seals
E02 FPM seals

Threaded inserts
F01 without threaded inserts
F02 with threaded inserts

Connecting parts
G11 PVC-C Cement socket metric
G12 PVC-C Cement socket JIS
G13 PVC-C Cement socket inch ASTM
G14 PVC-C Cement spigot metric
G15 PVC-C Threaded socket Rp
G16 PVC-C Threaded socket Rp reinforced (DN10-50)
G17 PVC-C Threaded socket NPT
G40 PE-100 Butt fusion metric
G41 PE-100 Butt fusion spigot SDR11 metric
G42 PE-100 Butt fusion spigot SDR17.6 metric (DN65-100)
G43 PE-100 Butt fusion spigot long SDR11 metric
G72 Backing flange PP-steel metric
G73 Backing flange PP-steel inch ANSI
G81 PVC-C Valve end blank

Multi-functional module
I01 No multi-functional module
I02 Empty module
I03 Module with 2 end switches Ag, Ni
I04 Module with 2 end switches Au
I05 Module with 2 inductive switches Namur
I06 Module with 2 inductive switches PNP
I07 Module with 2 inductive switches NPN

Lever
K01 Standard lever red
K02 Standard lever black
K11 Multi-functional lever red

Mounting plate
L01 without mounting plate
L02 with mounting plate

A01	B02	C	D	E	F	G	G	I	K	L
						left	right			

Copiable
GF ball valve type 546 with electric Actuator

It's easy to actuate the type 546:
With the configurator, you have a choice of new electric actuators, the EA11 for standard applications and the EA21 with modular design and accessories, for practically and type of operation.

We supply what you put together.

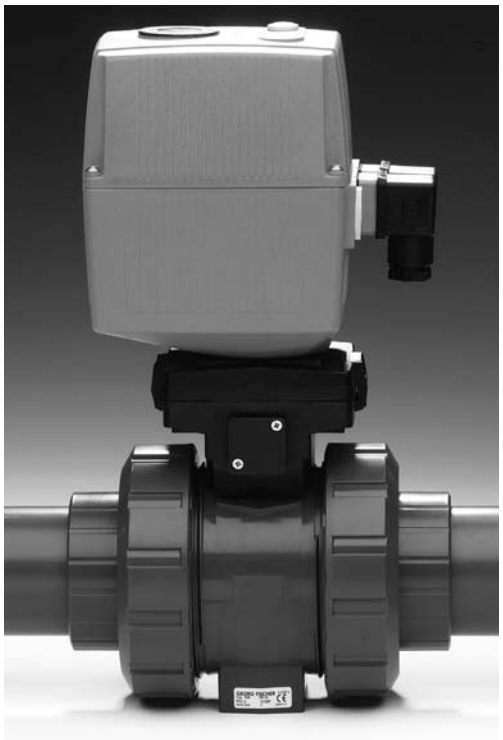

Electric Actuator EA11
T01 EA11 24 V
T02 EA11 100–230 V

Accessories EA11
U01 No accessories
U02 2 limit switches Ag, Ni
U03 Heating element
U04 Fail-safe return
U05 2 limit switches Ag, Ni normally open

Electric Actuator EA21/31
T03 EA21/31 24 V
T04 EA21/31 100–230 V

Accessories EA21
W01 No accessories
W02 Heating element
W03 Cycle time module
W04 Cycle time monitoring
W05 Cycles monitoring
W06 Motor current monitoring
W07 2 limit switches Ag, Ni
W08 2 limit switches Gold
W09 2 limit switches NPN
W10 2 limit switches PNP
W11 Positioner
W12 Electric position indicator
W14 Fail-safe return unit
W15 Switch intermediate position
W27 2 limit switches Ag, Ni normally open with connector
W31 Positioner PE25 with galv. separation

T	U	T	W	W	W	W	W	W

Ball valves pneumatic

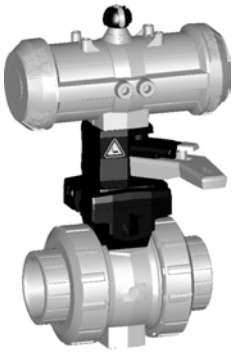

DN10/15 - 50

Ball valve type 230 PVC-C FC (fail safe to close)
With manual override
With solvent cement sockets metric

Model:

- Built on with pneumatic actuator PA11/21
- Control time 90°<) 1-2 s
- For easy installation and removal
- Integrated stainless steel mounting inserts

Option:

- Individual configuration of the valve (see form)

d [mm]	DN [mm]	PN	kv-value (Δp=1 bar) [l/min]	EPDM Code	FPM Code	kg
16	10	10	70	**199 230 402**	**199 230 412**	1.459
20	15	10	185	**199 230 403**	**199 230 413**	1.459
25	20	10	350	**199 230 404**	**199 230 414**	1.576
32	25	10	700	**199 230 405**	**199 230 415**	1.700
40	32	10	1000	**199 230 406**	**199 230 416**	2.751
50	40	10	1600	**199 230 407**	**199 230 417**	3.073
63	50	10	3100	**199 230 408**	**199 230 418**	3.931

d [mm]	D [mm]	H [mm]	H1 [mm]	H2 [mm]	H3 [mm]	H4 [mm]	H5 [mm]	L [mm]	L1 [mm]	L2 [mm]	L4 [mm]	L5 [mm]	L6 [mm]	L7 [mm]	z [mm]
16	50	230	27	62	168	40	97	92	194	56	25	261	76	48	64
20	50	230	27	62	168	40	97	95	194	56	25	261	76	48	64
25	58	239	30	71	168	40	97	110	194	65	25	261	76	48	72
32	68	239	36	71	168	40	97	123	194	71	25	261	76	48	79
40	84	271	44	84	187	51	115	146	224	85	45	305	95	59	94
50	97	271	51	84	187	51	115	157	224	89	45	305	95	59	95
63	124	293	64	106	187	51	115	183	224	101	45	305	95	59	107

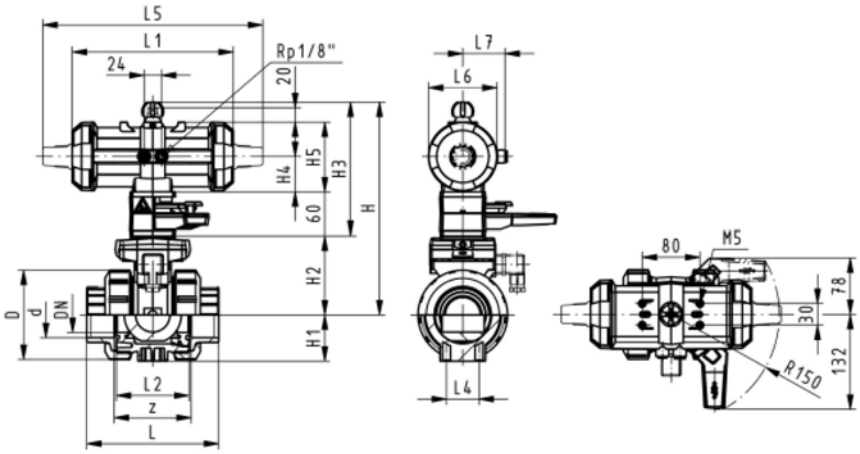

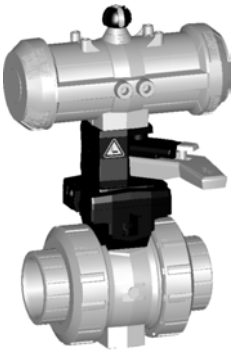

DN10/15 - 50

Ball valve type 230 PVC-C FO (Fail safe to open)
With manual override
With solvent cement sockets metric

Model:

- Built on with pneumatic actuator PA11/21
- Control time 90°<) 1-2 s
- For easy installation and removal
- Integrated stainless steel mounting inserts

Option:

- Individual configuration of the valve (see form)

d [mm]	DN [mm]	PN	kv-value (Δp=1 bar) [l/min]	EPDM Code	FPM Code	kg
16	10	10	70	**199 230 442**	**199 230 452**	1.149
20	15	10	185	**199 230 443**	**199 230 453**	1.459
25	20	10	350	**199 230 444**	**199 230 454**	1.576
32	25	10	700	**199 230 445**	**199 230 455**	1.700
40	32	10	1000	**199 230 446**	**199 230 456**	2.751
50	40	10	1600	**199 230 447**	**199 230 457**	3.073
63	50	10	3100	**199 230 448**	**199 230 458**	3.931

d [mm]	D [mm]	H [mm]	H1 [mm]	H2 [mm]	H3 [mm]	H4 [mm]	H5 [mm]	L [mm]	L1 [mm]	L2 [mm]	L4 [mm]	L5 [mm]	L6 [mm]	L7 [mm]	z [mm]
16	50	230	27	62	168	40	97	92	194	56	25	261	76	48	64
20	50	230	27	62	168	40	97	95	194	56	25	261	76	48	64
25	58	239	30	71	168	40	97	110	194	65	25	261	76	48	72
32	68	239	36	71	168	40	97	123	194	71	25	261	76	48	79
40	84	271	44	84	187	51	115	146	224	85	45	305	95	59	94
50	97	271	51	84	187	51	115	157	224	89	45	305	95	59	95
63	124	293	64	106	187	51	115	183	224	101	45	305	95	59	107

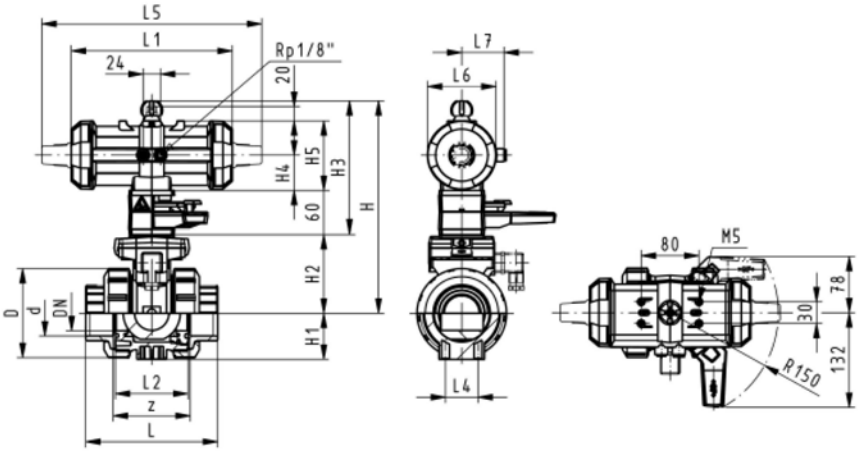

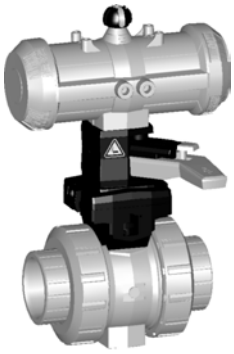

DN10/15 - 50

Ball valve type 230 PVC-C DA (Double acting)
With manual override
With solvent cement sockets metric

Model:

- Built on with pneumatic actuator PA11/21
- Control time 90°<) 1-2 s
- For easy installation and removal
- Integrated stainless steel mounting inserts

Option:

- Individual configuration of the valve (see form)

d [mm]	DN [mm]	PN	kv-value (Δp=1 bar) [l/min]	EPDM Code	FPM Code	kg
16	10	10	70	**199 230 482**	**199 230 492**	1.459
20	15	10	185	**199 230 483**	**199 230 493**	1.459
25	20	10	350	**199 230 484**	**199 230 494**	1.576
32	25	10	700	**199 230 485**	**199 230 495**	1.700
40	32	10	1000	**199 230 486**	**199 230 496**	2.751
50	40	10	1600	**199 230 487**	**199 230 497**	3.073
63	50	10	3100	**199 230 488**	**199 230 498**	3.931

d [mm]	D [mm]	H [mm]	H1 [mm]	H2 [mm]	H3 [mm]	H4 [mm]	H5 [mm]	L [mm]	L1 [mm]	L2 [mm]	L4 [mm]	L5 [mm]	L6 [mm]	L7 [mm]	z [mm]
16	50	230	27	62	168	40	97	92	194	56	25	261	76	48	64
20	50	230	27	62	168	40	97	95	194	56	25	261	76	48	64
25	58	239	30	71	168	40	97	110	194	65	25	261	76	48	72
32	68	239	36	71	168	40	97	123	194	71	25	261	76	48	79
40	84	271	44	84	187	51	115	146	224	85	45	305	95	59	94
50	97	271	51	84	187	51	115	157	224	89	45	305	95	59	95
63	124	293	64	106	187	51	115	183	224	101	45	305	95	59	107

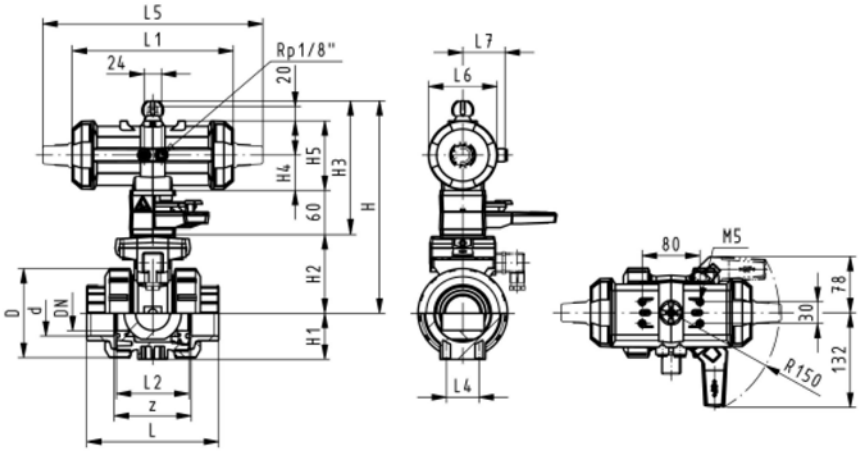

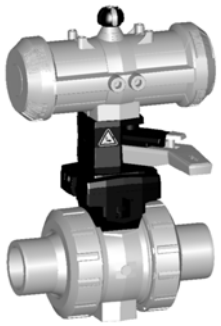

DN10/15 - 50

Ball valve type 230 PVC-C FC (fail safe to close)
With manual override
With solvent cement spigots metric

Model:

- Built on with pneumatic actuator PA11/21
- Control time 90°<) 1-2 s
- For easy installation and removal
- Integrated stainless steel mounting inserts

Option:

- Individual configuration of the valve (see form)

d [mm]	DN [mm]	PN	kv-value (Δp=1 bar) [l/min]	EPDM Code	FPM Code	kg
16	10	10	70	**199 230 422**	**199 230 432**	1.459
20	15	10	185	**199 230 423**	**199 230 433**	1.459
25	20	10	350	**199 230 424**	**199 230 434**	1.576
32	25	10	700	**199 230 425**	**199 230 435**	1.700
40	32	10	1000	**199 230 426**	**199 230 436**	2.751
50	40	10	1600	**199 230 427**	**199 230 437**	3.073
63	50	10	3100	**199 230 428**	**199 230 438**	3.931

d [mm]	D [mm]	H [mm]	H1 [mm]	H2 [mm]	H3 [mm]	H4 [mm]	H5 [mm]	L [mm]	L1 [mm]	L2 [mm]	L3 [mm]	L4 [mm]	L5 [mm]	L6 [mm]	L7 [mm]
16	50	230	27	62	168	40	97	114	194	56	130	25	261	76	48
20	50	230	27	62	168	40	97	124	194	56	130	25	261	76	48
25	58	239	30	71	168	40	97	144	194	65	150	25	261	76	48
32	68	239	36	71	168	40	97	154	194	71	160	25	261	76	48
40	84	271	44	84	187	51	115	174	224	85	180	45	305	95	59
50	97	271	51	84	187	51	115	194	224	89	200	45	305	95	59
63	124	293	64	106	187	51	115	224	224	101	230	45	305	95	59

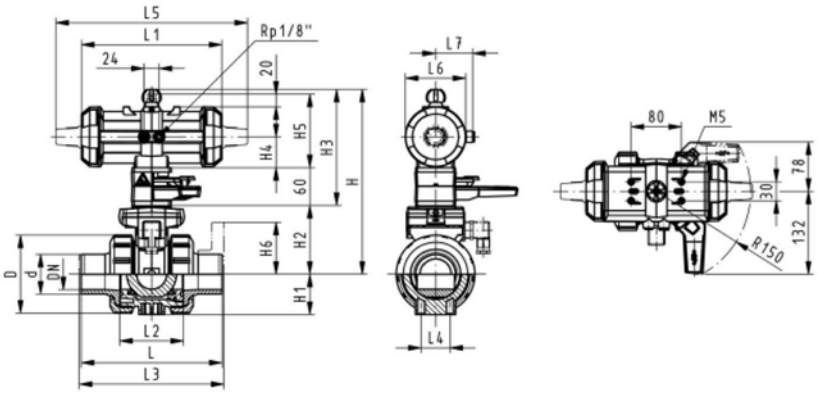

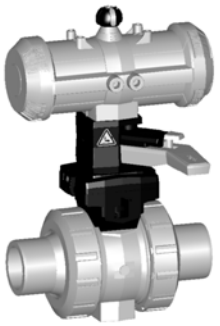

DN10/15 - 50

Ball valve type 230 PVC-C FO (Fail safe to open)
With manual override
With solvent cement spigots metric

Model:

- Built on with pneumatic actuator PA11/21
- Control time 90°<) 1-2 s
- For easy installation and removal
- Integrated stainless steel mounting inserts

Option:

- Individual configuration of the valve (see form)

d [mm]	DN [mm]	PN	kv-value (Δp=1 bar) [l/min]	EPDM Code	FPM Code	kg
16	10	10	70	**199 230 462**	**199 230 472**	1.459
20	15	10	185	**199 230 463**	**199 230 473**	1.459
25	20	10	350	**199 230 464**	**199 230 474**	1.576
32	25	10	700	**199 230 465**	**199 230 475**	1.700
40	32	10	1000	**199 230 466**	**199 230 476**	2.751
50	40	10	1600	**199 230 467**	**199 230 477**	3.073
63	50	10	3100	**199 230 468**	**199 230 478**	3.931

d [mm]	D [mm]	H [mm]	H1 [mm]	H2 [mm]	H3 [mm]	H4 [mm]	H5 [mm]	L [mm]	L1 [mm]	L2 [mm]	L3 [mm]	L4 [mm]	L5 [mm]	L6 [mm]	L7 [mm]
16	50	230	27	62	168	40	97	114	194	56	130	25	261	76	48
20	50	230	27	62	168	40	97	124	194	56	130	25	261	76	48
25	58	239	30	71	168	40	97	144	194	65	150	25	261	76	48
32	68	239	36	71	168	40	97	154	194	71	160	25	261	76	48
40	84	271	44	84	187	51	115	174	224	85	180	45	305	95	59
50	97	271	51	84	187	51	115	194	224	89	200	45	305	95	59
63	124	293	64	106	187	51	115	224	224	101	230	45	305	95	59

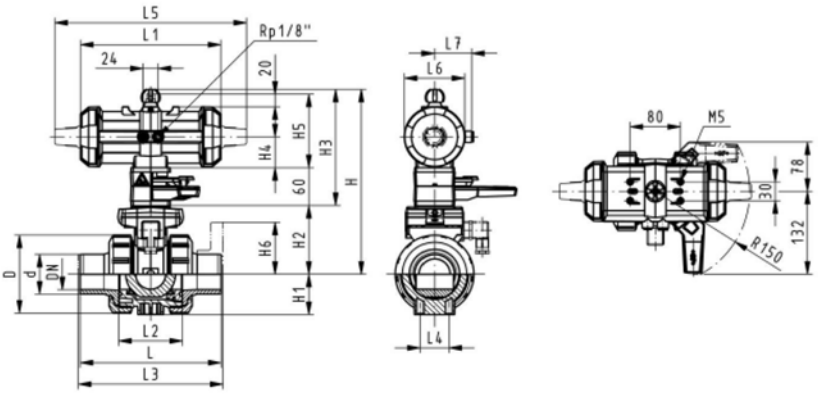

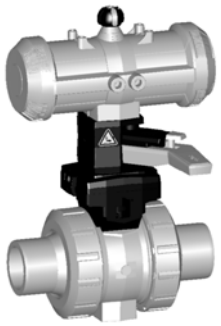

DN10/15 - 50

Ball valve type 230 PVC-C DA (Double acting)
With manual override
With solvent cement spigots metric

Model:

- Built on with pneumatic actuator PA11/21
- Control time 90°<) 1-2 s
- For easy installation and removal
- Integrated stainless steel mounting inserts

Option:

- Individual configuration of the valve (see form)

d [mm]	DN [mm]	PN	kv-value (Δp=1 bar) [l/min]	EPDM Code	FPM Code	kg
16	10	10	70	**199 230 502**	**199 230 512**	1.459
20	15	10	185	**199 230 503**	**199 230 513**	1.459
25	20	10	350	**199 230 504**	**199 230 514**	1.576
32	25	10	700	**199 230 505**	**199 230 515**	1.700
40	32	10	1000	**199 230 506**	**199 230 516**	2.751
50	40	10	1600	**199 230 507**	**199 230 517**	3.073
63	50	10	3100	**199 230 508**	**199 230 518**	3.931

d [mm]	D [mm]	H [mm]	H1 [mm]	H2 [mm]	H3 [mm]	H4 [mm]	H5 [mm]	L [mm]	L1 [mm]	L2 [mm]	L3 [mm]	L4 [mm]	L5 [mm]	L6 [mm]	L7 [mm]
16	50	230	27	62	168	40	97	114	194	56	130	25	261	76	48
20	50	230	27	62	168	40	97	124	194	56	130	25	261	76	48
25	58	239	30	71	168	40	97	144	194	65	150	25	261	76	48
32	68	239	36	71	168	40	97	154	194	71	160	25	261	76	48
40	84	271	44	84	187	51	115	174	224	85	180	45	305	95	59
50	97	271	51	84	187	51	115	194	224	89	200	45	305	95	59
63	124	293	64	106	187	51	115	224	224	101	230	45	305	95	59

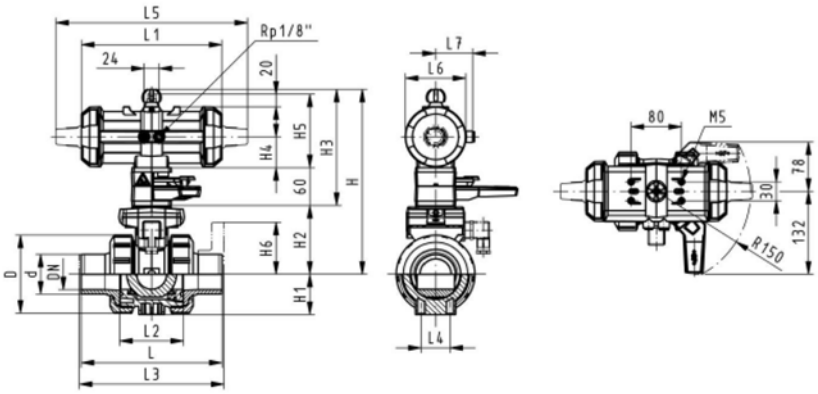

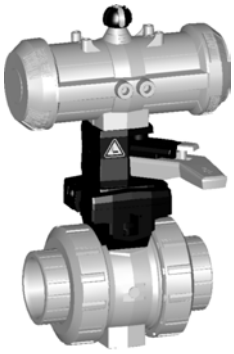

DN10/15 - 50

Ball valve type 230 PVC-C FC (fail safe to close)
With manual override
With threaded sockets Rp

Model:

- Built on with pneumatic actuator PA11/21
- Control time 90°<) 1-2 s
- For easy installation and removal
- Integrated stainless steel mounting inserts

Option:

- Individual configuration of the valve (see form)

Rp [inch]	DN [mm]	PN	kv-value (Δp=1 bar) [l/min]	EPDM Code	FPM Code	kg
⅜	10	10	70	**199 230 752**	**199 230 772**	1.500
½	15	10	185	**199 230 753**	**199 230 773**	1.500
¾	20	10	350	**199 230 754**	**199 230 774**	1.600
1	25	10	700	**199 230 755**	**199 230 775**	1.700
1 ¼	32	10	1000	**199 230 756**	**199 230 776**	2.800
1 ½	40	10	1600	**199 230 757**	**199 230 777**	3.100
2	50	10	3100	**199 230 758**	**199 230 778**	4.000

Rp [inch]	D [mm]	H [mm]	H1 [mm]	H2 [mm]	H3 [mm]	H4 [mm]	H5 [mm]	L [mm]	L1 [mm]	L2 [mm]	L4 [mm]	L5 [mm]	L6 [mm]	L7 [mm]	z [mm]
⅜	50	230	27	62	168	40	97	92	194	56	25	261	76	48	64
½	50	230	27	62	168	40	97	95	194	56	25	261	76	48	64
¾	58	239	30	71	168	40	97	110	194	65	25	261	76	48	72
1	68	239	36	71	168	40	97	123	194	71	25	261	76	48	79
1 ¼	84	271	44	84	187	51	115	146	224	85	45	305	95	59	94
1 ½	97	271	51	84	187	51	115	157	224	89	45	305	95	59	95
2	124	293	64	106	187	51	115	183	224	101	45	305	95	59	107

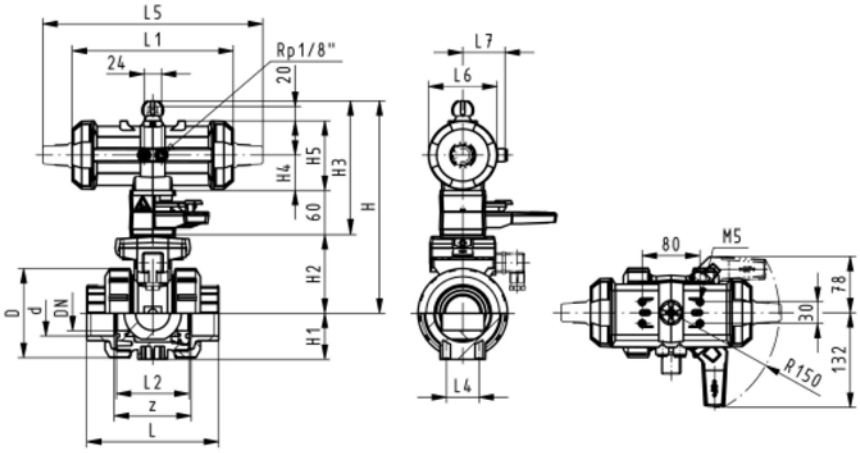

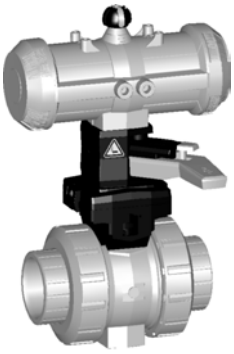

DN10/15 - 50

Ball valve type 230 PVC-C FO (Fail safe to open)
With manual override
With threaded sockets Rp

Model:

- Built on with pneumatic actuator PA11/21
- Control time 90°<) 1-2 s
- For easy installation and removal
- Integrated stainless steel mounting inserts

Option:

- Individual configuration of the valve (see form)

Rp [inch]	DN [mm]	PN	kv-value (Δp=1 bar) [l/min]	EPDM Code	FPM Code	kg
⅜	10	10	70	**199 230 792**	**199 230 812**	1.500
½	15	10	185	**199 230 793**	**199 230 813**	1.500
¾	20	10	350	**199 230 794**	**199 230 814**	1.600
1	25	10	700	**199 230 795**	**199 230 815**	1.700
1 ¼	32	10	1000	**199 230 796**	**199 230 816**	2.800
1 ½	40	10	1600	**199 230 797**	**199 230 817**	3.100
2	50	10	3100	**199 230 798**	**199 230 818**	4.000

Rp [inch]	D [mm]	H [mm]	H1 [mm]	H2 [mm]	H3 [mm]	H4 [mm]	H5 [mm]	L [mm]	L1 [mm]	L2 [mm]	L4 [mm]	L5 [mm]	L6 [mm]	L7 [mm]	z [mm]
⅜	50	230	27	62	168	40	97	92	194	56	25	261	76	48	64
½	50	230	27	62	168	40	97	95	194	56	25	261	76	48	64
¾	58	239	30	71	168	40	97	110	194	65	25	261	76	48	72
1	68	239	36	71	168	40	97	123	194	71	25	261	76	48	79
1 ¼	84	271	44	84	187	51	115	146	224	85	45	305	95	59	94
1 ½	97	271	51	84	187	51	115	157	224	89	45	305	95	59	95
2	124	293	64	106	187	51	115	183	224	101	45	305	95	59	107

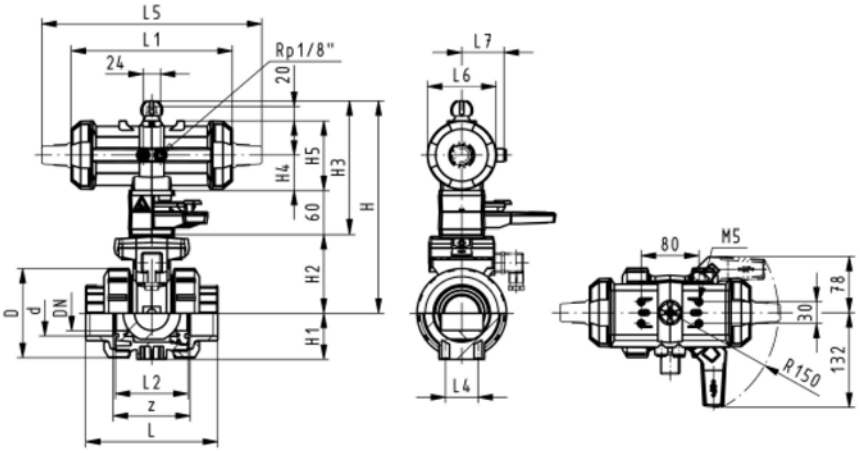

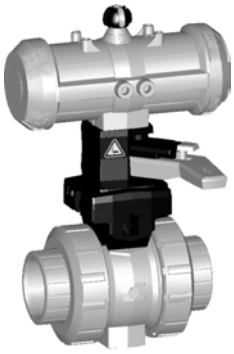

DN10/15 - 50

Ball valve type 230 PVC-C DA (Double acting)
With manual override
With threaded sockets Rp

Model:

- Built on with pneumatic actuator PA11/21
- Control time 90°<) 1-2 s
- For easy installation and removal
- Integrated stainless steel mounting inserts

Option:

- Individual configuration of the valve (see form)

Rp [inch]	DN [mm]	PN	kv-value (Δp=1 bar) [l/min]	EPDM Code	FPM Code	kg
⅜	10	10	70	**199 230 832**	**199 230 852**	1.500
½	15	10	185	**199 230 833**	**199 230 853**	1.500
¾	20	10	350	**199 230 834**	**199 230 854**	1.600
1	25	10	700	**199 230 835**	**199 230 855**	1.700
1 ¼	32	10	1000	**199 230 836**	**199 230 856**	2.800
1 ½	40	10	1600	**199 230 837**	**199 230 857**	3.100
2	50	10	3100	**199 230 838**	**199 230 858**	4.000

Rp [inch]	D [mm]	H [mm]	H1 [mm]	H2 [mm]	H3 [mm]	H4 [mm]	H5 [mm]	L [mm]	L1 [mm]	L2 [mm]	L4 [mm]	L5 [mm]	L6 [mm]	L7 [mm]	z [mm]
⅜	50	230	27	62	168	40	97	92	194	56	25	261	76	48	64
½	50	230	27	62	168	40	97	95	194	56	25	261	76	48	64
¾	58	239	30	71	168	40	97	110	194	65	25	261	76	48	72
1	68	239	36	71	168	40	97	123	194	71	25	261	76	48	79
1 ¼	84	271	44	84	187	51	115	146	224	85	45	305	95	59	94
1 ½	97	271	51	84	187	51	115	157	224	89	45	305	95	59	95
2	124	293	64	106	187	51	115	183	224	101	45	305	95	59	107

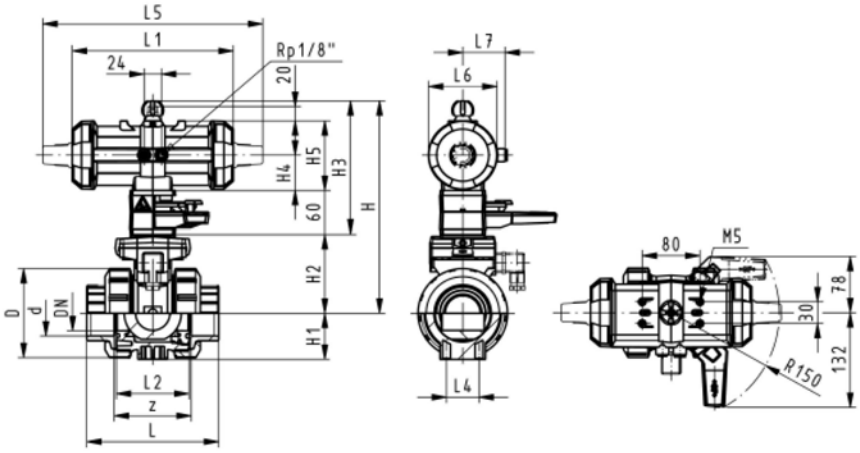

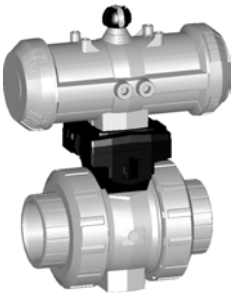

DN10/15 - 50

Ball valve type 230 PVC-C FC (Fail safe to close)
Without manual override
With solvent cement sockets metric

Model:

- Assignment of actuators PA11 (DN10/15-25), PA21 (DN32-50), PA30 (DN65), PA35 (DN80), PA40 (DN100)
- Image and drawing DN65-100 please see **New product ball valve DN65-100**
- For easy installation and removal
- Integrated stainless steel mounting inserts
- Control time 90°<) 1-2 s

Option:

- Individual configuration of the valve (see form)

d [mm]	DN [mm]	PN	kv-value (Δp=1 bar) [l/min]	EPDM Code	FPM Code	kg
16	10	10	70	**199 230 522**	**199 230 532**	1.159
20	15	10	185	**199 230 523**	**199 230 533**	1.159
25	20	10	350	**199 230 524**	**199 230 534**	1.276
32	25	10	700	**199 230 525**	**199 230 535**	1.400
40	32	10	1000	**199 230 526**	**199 230 536**	2.451
50	40	10	1600	**199 230 527**	**199 230 537**	2.773
63	50	10	3100	**199 230 528**	**199 230 538**	3.631
New 75	65	10	5000	**199 230 529**	**199 230 539**	4.400
New 90	80	10	7000	**199 230 530**	**199 230 540**	5.500
New 110	100	10	11000	**199 230 531**	**199 230 541**	8.100

d [mm]	D [mm]	H [mm]	H1 [mm]	H2 [mm]	H4 [mm]	H5 [mm]	L [mm]	L1 [mm]	L2 [mm]	L4 [mm]	L5 [mm]	L6 [mm]	L7 [mm]	z [mm]
16	50	167	27	62	40	97	92	194	56	25	261	76	48	64
20	50	167	27	62	40	97	95	194	56	25	261	76	48	64
25	58	176	30	71	40	97	110	194	65	25	261	76	48	72
32	68	176	36	71	40	97	123	194	71	25	261	76	48	79
40	84	210	44	84	51	115	146	224	85	45	305	95	59	94
50	97	210	51	84	51	115	157	224	89	45	305	95	59	95
63	124	232	64	106	51	115	183	224	101	45	305	95	59	107
New 75	166	262	85	156		70	233	218	136	70	276	65		144
New 90	200	281	105	168		78	254	259	141	70	341	72		151
New 110	238	292	123	175		86	301	287	164	120	369	80		174

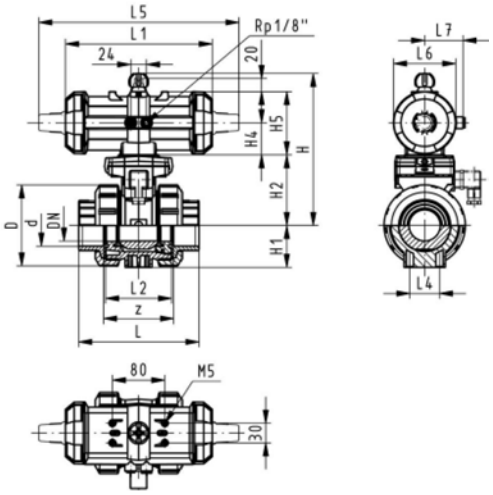

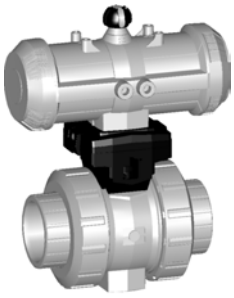

DN10/15 - 50

Ball valve type 230 PVC-C FO (Fail safe to open)
Without manual override
With solvent cement sockets metric

Model:

- Assignment of actuators PA11 (DN10/15-25), PA21 (DN32-50), PA30 (DN65), PA35 (DN80), PA40 (DN100)
- Image and drawing DN65-100 please see **New product ball valve DN65-100**
- For easy installation and removal
- Integrated stainless steel mounting inserts
- Control time 90°<) 1-2 s

Option:

- Individual configuration of the valve (see form)

d [mm]	DN [mm]	PN	kv-value (Δp=1 bar) [l/min]	EPDM Code	FPM Code	kg
16	10	10	70	**199 230 562**	**199 230 572**	1.159
20	15	10	185	**199 230 563**	**199 230 573**	1.159
25	20	10	350	**199 230 564**	**199 230 574**	1.276
32	25	10	700	**199 230 565**	**199 230 575**	1.400
40	32	10	1000	**199 230 566**	**199 230 576**	2.451
50	40	10	1600	**199 230 567**	**199 230 577**	2.773
63	50	10	3100	**199 230 568**	**199 230 578**	3.631
New 75	65	10	5000	**199 230 569**	**199 230 579**	4.400
New 90	80	10	7000	**199 230 570**	**199 230 580**	5.500
New 110	100	10	11000	**199 230 571**	**199 230 581**	8.100

d [mm]	D [mm]	H [mm]	H1 [mm]	H2 [mm]	H4 [mm]	H5 [mm]	L [mm]	L1 [mm]	L2 [mm]	L4 [mm]	L5 [mm]	L6 [mm]	L7 [mm]	z [mm]
16	50	167	27	62	40	97	92	194	56	25	261	76	48	64
20	50	167	27	62	40	97	95	194	56	25	261	76	48	64
25	58	176	30	71	40	97	110	194	65	25	261	76	48	72
32	68	176	36	71	40	97	123	194	71	25	261	76	48	79
40	84	210	44	84	51	115	146	224	85	45	305	95	59	94
50	97	210	51	84	51	115	157	224	89	45	305	95	59	95
63	124	232	64	106	51	115	183	224	101	45	305	95	59	107
New 75	166	262	85	156		70	233	218	136	70	276	65		144
New 90	200	281	105	168		78	254	259	141	70	341	72		151
New 110	238	292	123	175		86	301	287	164	120	369	80		174

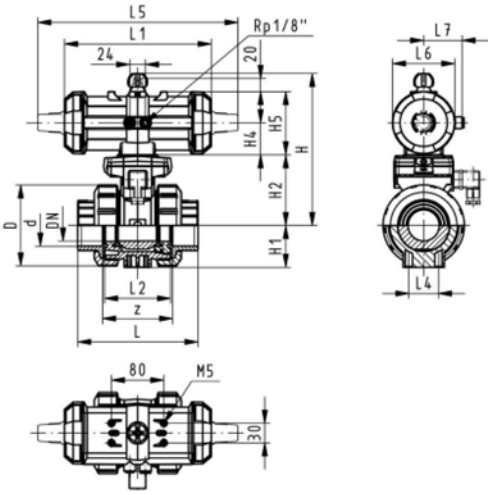

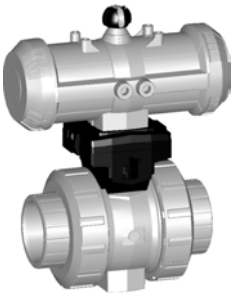

DN10/15 - 50

Ball valve type 230 PVC-C DA (Double acting)
Without manual override
With solvent cement sockets metric

Model:

- Assignment of actuators: PA11 (DN10/15-25), PA21 (DN32-50), PA35 (DN65), PA40 (DN80), PA45 (DN100)
- Image and drawing DN65-100 please see **New product ball valve DN65-100**
- For easy installation and removal
- Integrated stainless steel mounting inserts
- Control time 90°<) 1-2 s

Option:

- Individual configuration of the valve (see form)

d [mm]	DN [mm]	PN	kv-value (Δp=1 bar) [l/min]	EPDM Code	FPM Code	kg
16	10	10	70	**199 230 602**	**199 230 612**	1.159
20	15	10	185	**199 230 603**	**199 230 613**	1.159
25	20	10	350	**199 230 604**	**199 230 614**	1.276
32	25	10	700	**199 230 605**	**199 230 615**	1.400
40	32	10	1000	**199 230 606**	**199 230 616**	2.451
50	40	10	1600	**199 230 607**	**199 230 617**	2.773
63	50	10	3100	**199 230 608**	**199 230 618**	3.631
New 75	65	10	5000	**199 230 609**	**199 230 619**	3.300
New 90	80	10	7000	**199 230 610**	**199 230 620**	4.800
New 110	100	10	11000	**199 230 611**	**199 230 621**	6.300

d [mm]	D [mm]	H [mm]	H1 [mm]	H2 [mm]	H4 [mm]	H5 [mm]	L [mm]	L1 [mm]	L2 [mm]	L4 [mm]	L5 [mm]	L6 [mm]	L7 [mm]	z [mm]
16	50	167	27	62	40	97	92	194	56	25	261	76	48	64
20	50	167	27	62	40	97	95	194	56	25	261	76	48	64
25	58	176	30	71	40	97	110	194	65	25	261	76	48	72
32	68	176	36	71	40	97	123	194	71	25	261	76	48	79
40	84	210	44	84	51	115	146	224	85	45	305	95	59	94
50	97	210	51	84	51	115	157	224	89	45	305	95	59	95
63	124	232	64	106	51	115	183	224	101	45	305	95	59	107
New 75	166	257	85	156		66	233	144	136	70	190	60		144
New 90	200	274	105	168		70	254	152	141	70	198	65		151
New 110	238	273	123	175		78	301	169	164	120	235	72		174

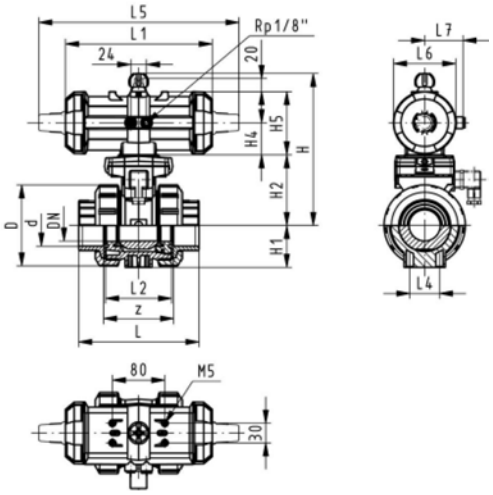

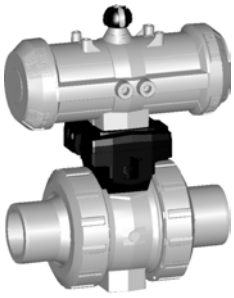

DN10/15 - 50

Ball valve type 230 PVC-C FC (Fail safe to close)
Without manual override
With solvent cement spigots metric

Model:

- Assignment of actuators PA11 (DN10/15-25), PA21 (DN32-50), PA30 (DN65), PA35 (DN80), PA40 (DN100)
- Image and drawing DN65-100 please see **New product ball valve DN65-100**
- For easy installation and removal
- Integrated stainless steel mounting inserts
- Control time 90°<) 1-2 s

Option:

- Individual configuration of the valve (see form)

d [mm]	DN [mm]	PN	kv-value (Δp=1 bar) [l/min]	EPDM Code	FPM Code	kg
16	10	10	70	**199 230 542**	**199 230 552**	1.159
20	15	10	185	**199 230 543**	**199 230 553**	1.159
25	20	10	350	**199 230 544**	**199 230 554**	1.276
32	25	10	700	**199 230 545**	**199 230 555**	1.400
40	32	10	1000	**199 230 546**	**199 230 556**	2.451
50	40	10	1600	**199 230 547**	**199 230 557**	2.773
63	50	10	3100	**199 230 548**	**199 230 558**	3.631
New 75	65	10	5000	**199 230 549**	**199 230 559**	4.600
New 90	80	10	7000	**199 230 550**	**199 230 560**	5.700
New 110	100	10	11000	**199 230 551**	**199 230 561**	8.300

d [mm]	D [mm]	H [mm]	H1 [mm]	H2 [mm]	H4 [mm]	H5 [mm]	L [mm]	L1 [mm]	L2 [mm]	L3 [mm]	L4 [mm]	L5 [mm]	L6 [mm]	L7 [mm]
16	50	167	27	62	40	97	114	194	56	0	25	261	76	48
20	50	167	27	62	40	97	124	194	56	130	25	261	76	48
25	58	176	30	71	40	97	144	194	65	150	25	261	76	48
32	68	176	36	71	40	97	154	194	71	160	25	261	76	48
40	84	210	44	84	51	115	174	224	85	180	45	305	95	59
50	97	210	51	84	51	115	194	224	89	200	45	305	95	59
63	124	232	64	106	51	115	224	224	101	230	45	305	95	59
New 75	166	262	85	156		70	284	218	136	290	70	276	65	
New 90	200	281	105	168		78	300	259	141	310	70	341	72	
New 110	238	292	123	175		86	340	287	164	350	120	369	80	

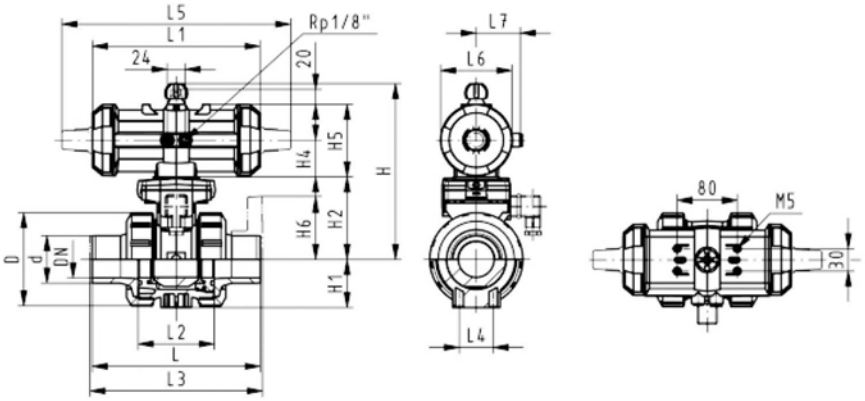

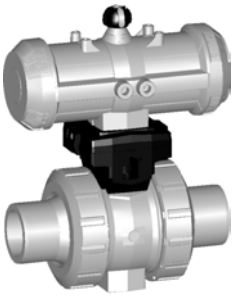

DN10/15 - 50

Ball valve type 230 PVC-C FO (Fail safe to open)
Without manual override
With solvent cement spigots metric

Model:

- Assignment of actuators PA11 (DN10/15-25), PA21 (DN32-50), PA30 (DN65), PA35 (DN80), PA40 (DN100)
- Image and drawing DN65-100 please see **New product ball valve DN65-100**
- For easy installation and removal
- Integrated stainless steel mounting inserts
- Control time 90°<) 1-2 s

Option:

- Individual configuration of the valve (see form)

d [mm]	DN [mm]	PN	kv-value (Δp=1 bar) [l/min]	EPDM Code	FPM Code	kg
16	10	10	70	**199 230 582**	**199 230 592**	1.159
20	15	10	185	**199 230 583**	**199 230 593**	1.159
25	20	10	350	**199 230 584**	**199 230 594**	1.276
32	25	10	700	**199 230 585**	**199 230 595**	1.400
40	32	10	1000	**199 230 586**	**199 230 596**	2.451
50	40	10	1600	**199 230 587**	**199 230 597**	2.773
63	50	10	3100	**199 230 588**	**199 230 598**	3.631
New 75	65	10	5000	**199 230 589**	**199 230 599**	4.600
New 90	80	10	7000	**199 230 590**	**199 230 600**	5.700
New 110	100	10	11000	**199 230 591**	**199 230 601**	8.300

d [mm]	D [mm]	H [mm]	H1 [mm]	H2 [mm]	H4 [mm]	H5 [mm]	L [mm]	L1 [mm]	L2 [mm]	L3 [mm]	L4 [mm]	L5 [mm]	L6 [mm]	L7 [mm]
16	50	167	27	62	40	97	114	194	56	130	25	261	76	48
20	50	167	27	62	40	97	124	194	56	130	25	261	76	48
25	58	176	30	71	40	97	144	194	65	150	25	261	76	48
32	68	176	36	71	40	97	154	194	71	160	25	261	76	48
40	84	210	44	84	51	115	174	224	85	180	45	305	95	59
50	97	210	51	84	51	115	194	224	89	200	45	305	95	59
63	124	232	64	106	51	115	224	224	101	230	45	305	95	59
New 75	166	262	85	156		70	284	218	136	290	70	276	65	
New 90	200	281	105	168		78	300	259	141	310	70	341	72	
New 110	238	292	123	175		86	340	287	164	350	120	369	80	

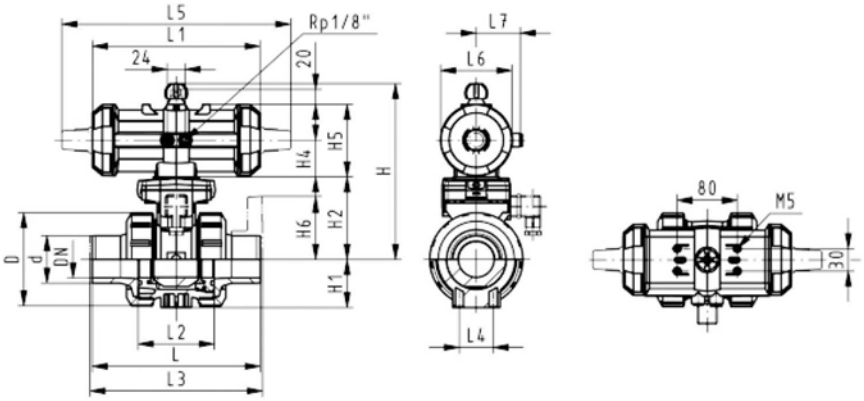

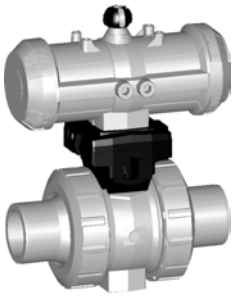

DN10/15 - 50

Ball valve type 230 PVC-C DA (Double acting)
Without manual override
With solvent cement spigots metric

Model:

- Assignment of actuators: PA11 (DN10/15-25), PA21 (DN32-50), PA35 (DN65), PA40 (DN80), PA45 (DN100)
- Image and drawing DN65-100 please see **New product ball valve DN65-100**
- For easy installation and removal
- Integrated stainless steel mounting inserts
- Control time 90°<) 1-2 s

Option:

- Individual configuration of the valve (see form)

d [mm]	DN [mm]	PN	kv-value (Δp=1 bar) [l/min]	EPDM Code	FPM Code	kg
16	10	10	70	**199 230 622**	**199 230 632**	1.159
20	15	10	185	**199 230 623**	**199 230 633**	1.159
25	20	10	350	**199 230 624**	**199 230 634**	1.276
32	25	10	700	**199 230 625**	**199 230 635**	1.400
40	32	10	1000	**199 230 626**	**199 230 636**	2.451
50	40	10	1600	**199 230 627**	**199 230 637**	2.773
63	50	10	3100	**199 230 628**	**199 230 638**	3.631
New 75	65	10	5000	**199 230 629**	**199 230 639**	3.500
New 90	80	10	7000	**199 230 630**	**199 230 640**	5.000
New 110	100	10	11000	**199 230 631**	**199 230 641**	6.600

d [mm]	D [mm]	H [mm]	H1 [mm]	H2 [mm]	H4 [mm]	H5 [mm]	L [mm]	L1 [mm]	L2 [mm]	L3 [mm]	L4 [mm]	L5 [mm]	L6 [mm]	L7 [mm]
16	50	167	27	62	40	97	114	194	56	130	25	261	76	48
20	50	167	27	62	40	97	124	194	56	130	25	261	76	48
25	58	176	30	71	40	97	144	194	65	150	25	261	76	48
32	68	176	36	71	40	97	154	194	71	160	25	261	76	48
40	84	210	44	84	51	115	174	224	85	180	45	305	95	59
50	97	210	51	84	51	115	194	224	89	200	45	305	95	59
63	124	232	64	106	51	115	224	224	101	230	45	305	95	59
New 75	166	257	85	156		66	284	144	136	290	70	190	60	
New 90	200	274	105	168		70	300	152	141	310	70	198	65	
New 110	238	273	123	175		78	340	169	164	350	120	235	72	

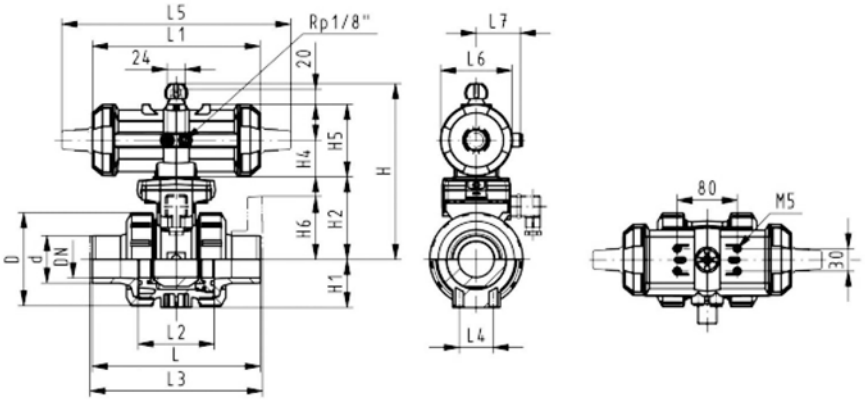

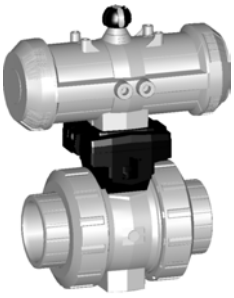

DN10/15 - 50

Ball valve type 230 PVC-C FC (Fail safe to close)
Without manual override
With threaded sockets Rp

Model:

- Assignment of actuators PA11 (DN10/15-25), PA21 (DN32-50), PA30 (DN65), PA35 (DN80), PA40 (DN100)
- Image and drawing DN65-100 please see **New product ball valve DN65-100**
- For easy installation and removal
- Integrated stainless steel mounting inserts
- Control time 90°<) 1-2 s

Option:

- Individual configuration of the valve (see form)

Rp [inch]	DN [mm]	PN	kv-value (Δp=1 bar) [l/min]	EPDM Code	FPM Code	kg
⅜	10	10	70	**199 230 872**	**199 230 892**	1.200
½	15	10	185	**199 230 873**	**199 230 893**	1.200
¾	20	10	350	**199 230 874**	**199 230 894**	1.300
1	25	10	700	**199 230 875**	**199 230 895**	1.400
1 ¼	32	10	1000	**199 230 876**	**199 230 896**	2.500
1 ½	40	10	1600	**199 230 877**	**199 230 897**	2.800
2	50	10	3100	**199 230 878**	**199 230 898**	3.700
New 2 ½	65	10	5000	**199 230 879**	**199 230 899**	4.500
New 3	80	10	7000	**199 230 880**	**199 230 900**	5.600
New 4	100	10	11000	**199 230 881**	**199 230 901**	8.200

Rp [inch]	D [mm]	H [mm]	H1 [mm]	H2 [mm]	H4 [mm]	H5 [mm]	L [mm]	L1 [mm]	L2 [mm]	L4 [mm]	L5 [mm]	L6 [mm]	L7 [mm]	z [mm]
⅜	50	167	27	62	40	97	92	194	56	25	261	76	48	64
½	50	167	27	62	40	97	95	194	56	25	261	76	48	64
¾	58	176	30	71	40	97	110	194	65	25	261	76	48	72
1	68	176	36	71	40	97	123	194	71	25	261	76	48	79
1 ¼	84	210	44	84	51	115	146	224	85	45	305	95	59	94
1 ½	97	210	51	84	51	115	157	224	89	45	305	95	59	95
2	124	232	64	106	51	115	183	224	101	45	305	95	59	107
New 2 ½	166	262	85	156		70	233	218	136	70	276	65		144
New 3	200	281	105	168		78	254	259	141	70	341	72		151
New 4	238	292	123	175		86	301	287	164	120	369	80		174

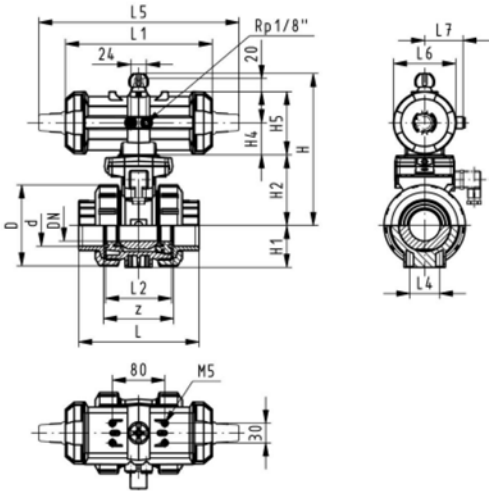

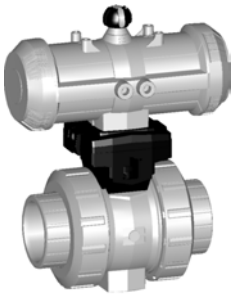

DN10/15 - 50

Ball valve type 230 PVC-C FO (Fail safe to open)
Without manual override
With threaded sockets Rp

Model:

- Assignment of actuators PA11 (DN10/15-25), PA21 (DN32-50), PA30 (DN65), PA35 (DN80), PA40 (DN100)
- Image and drawing DN65-100 please see **New product ball valve DN65-100**
- For easy installation and removal
- Integrated stainless steel mounting inserts
- Control time 90°<) 1-2 s

Option:

- Individual configuration of the valve (see form)

Rp [inch]	DN [mm]	PN	kv-value (Δp=1 bar) [l/min]	EPDM Code	FPM Code	kg
⅜	10	10	70	**199 230 912**	**199 230 932**	1.200
½	15	10	185	**199 230 913**	**199 230 933**	1.200
¾	20	10	350	**199 230 914**	**199 230 934**	1.300
1	25	10	700	**199 230 915**	**199 230 935**	1.400
1 ¼	32	10	1000	**199 230 916**	**199 230 936**	2.500
1 ½	40	10	1600	**199 230 917**	**199 230 937**	2.800
2	50	10	3100	**199 230 918**	**199 230 938**	3.700
New 2 ½	65	10	5000	**199 230 919**	**199 230 939**	4.500
New 3	80	10	7000	**199 230 920**	**199 230 940**	5.600
New 4	100	10	11000	**199 230 921**	**199 230 941**	8.200

Rp [inch]	D [mm]	H [mm]	H1 [mm]	H2 [mm]	H4 [mm]	H5 [mm]	L [mm]	L1 [mm]	L2 [mm]	L4 [mm]	L5 [mm]	L6 [mm]	L7 [mm]	z [mm]
⅜	50	167	27	62	40	97	92	194	56	25	261	76	48	64
½	50	167	27	62	40	97	95	194	56	25	261	76	48	64
¾	58	176	30	71	40	97	110	194	65	25	261	76	48	72
1	68	176	36	71	40	97	123	194	71	25	261	76	48	79
1 ¼	84	210	44	84	51	115	146	224	85	45	305	95	59	94
1 ½	97	210	51	84	51	115	157	224	89	45	305	95	59	95
2	124	232	64	106	51	115	183	224	101	45	305	95	59	107
New 2 ½	166	262	85	156		70	233	218	136	70	276	65		144
New 3	200	281	105	168		78	254	259	141	70	341	72		151
New 4	238	292	123	175		86	301	287	164	120	369	80		174

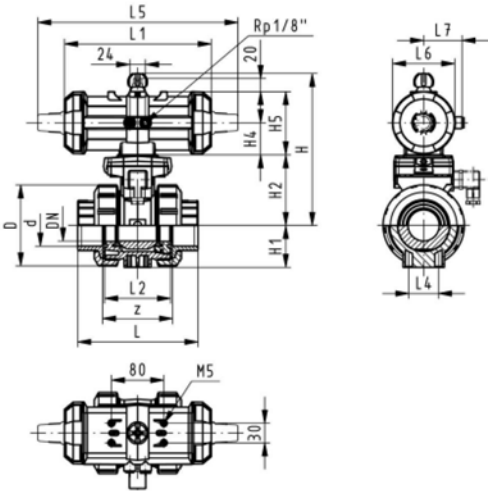

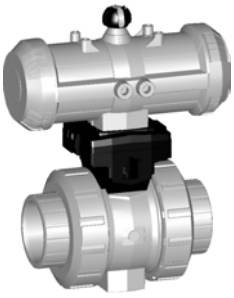

DN10/15 - 50

Ball valve type 230 PVC-C DA (Double acting)
Without manual override
With threaded sockets Rp

Model:

- Assignment of actuators: PA11 (DN10/15-25), PA21 (DN32-50), PA35 (DN65), PA40 (DN80), PA45 (DN100)
- Image and drawing DN65-100 please see **New product ball valve DN65-100**
- For easy installation and removal
- Integrated stainless steel mounting inserts
- Control time 90°<) 1-2 s

Option:

- Individual configuration of the valve (see form)

Rp [inch]	DN [mm]	PN	kv-value (Δp=1 bar) [l/min]	EPDM Code	FPM Code	kg
⅜	10	10	70	**199 230 942**	**199 230 952**	1.200
½	15	10	185	**199 230 943**	**199 230 953**	1.200
¾	20	10	350	**199 230 944**	**199 230 954**	1.300
1	25	10	700	**199 230 945**	**199 230 955**	1.400
1 ¼	32	10	1000	**199 230 946**	**199 230 956**	2.500
1 ½	40	10	1600	**199 230 947**	**199 230 957**	2.800
2	50	10	3100	**199 230 948**	**199 230 958**	3.700
New 2 ½	65	10	5000	**199 230 949**	**199 230 959**	3.400
New 3	80	10	7000	**199 230 950**	**199 230 960**	4.900
New 4	100	10	11000	**199 230 951**	**199 230 961**	6.400

Rp [inch]	D [mm]	H [mm]	H1 [mm]	H2 [mm]	H4 [mm]	H5 [mm]	L [mm]	L1 [mm]	L2 [mm]	L4 [mm]	L5 [mm]	L6 [mm]	L7 [mm]	z [mm]
⅜	50	167	27	62	40	97	92	194	56	25	261	76	48	64
½	50	167	27	62	40	97	95	194	56	25	261	76	48	64
¾	58	176	30	71	40	97	110	194	65	25	261	76	48	72
1	68	176	36	71	40	97	123	194	71	25	261	76	48	79
1 ¼	84	210	44	84	51	115	146	224	85	45	305	95	59	94
1 ½	97	210	51	84	51	115	157	224	89	45	305	95	59	95
2	124	232	64	106	51	115	183	224	101	45	305	95	59	107
New 2 ½	166	257	85	156		66	233	144	136	70	190	60		144
New 3	200	274	105	168		70	254	152	141	70	198	65		151
New 4	238	273	123	175		78	301	169	164	120	235	72		174

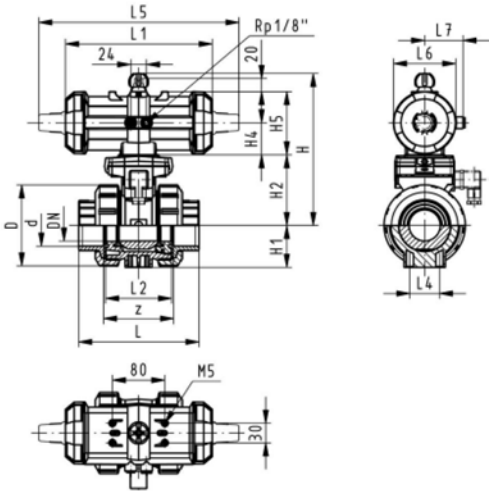

Ball valve type 230 PVC-C FC (Fail safe to close)
Without manual override
With backing flanges PP-st metric

Model:

- Assignment of actuators PA11 (DN10/15-25), PA21 (DN32-50), PA30 (DN65), PA35 (DN80), PA40 (DN100)
- Image and drawing DN65-100 please see **New product ball valve DN65-100**
- For easy installation and removal
- Integrated stainless steel mounting inserts
- Control time 90°<) 1-2 s
- Overall length according to EN 558-1
- Connecting dimensions: ISO 7005, EN 1092, BS 4504, DIN 2501; bolt circle PN 10

Option:

- Individual configuration of the valve (see form)

d [mm]	DN [mm]	PN	kv-value (Δp=1 bar) [l/min]	EPDM Code	FPM Code	kg
New 75	65	10	5000	**199 234 609**	**199 234 619**	8.600
New 90	80	10	7000	**199 234 610**	**199 234 620**	10.500
New 110	100	10	11000	**199 234 611**	**199 234 621**	14.800

d [mm]	D [mm]	H [mm]	H1 [mm]	H2 [mm]	H5 [mm]	H6 [mm]	L [mm]	L1 [mm]	L2 [mm]	L3 [mm]	L4 [mm]	L5 [mm]	L6 [mm]
New 75	166	262	85	156	70	93	284	218	136	290	70	276	65
New 90	200	281	105	168	78	100	300	259	141	310	70	341	72
New 110	238	292	123	175	86	110	340	287	164	350	120	369	80

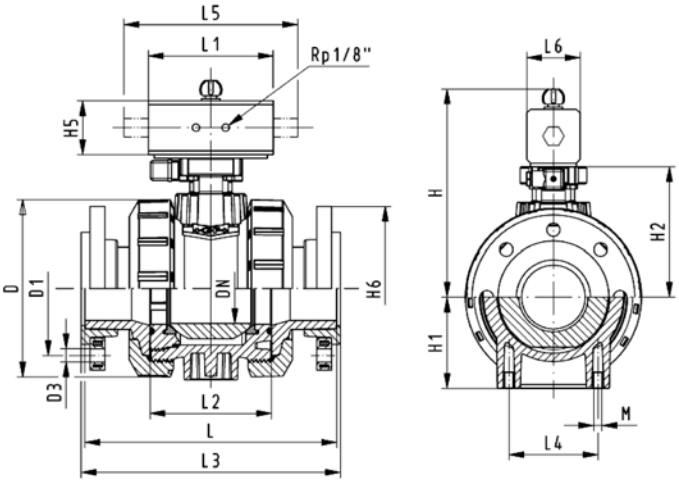

Ball valve type 230 PVC-C FO (Fail safe to open)
Without manual override
With backing flanges PP-st metric

Model:

- Assignment of actuators PA11 (DN10/15-25), PA21 (DN32-50), PA30 (DN65), PA35 (DN80), PA40 (DN100)
- Image and drawing DN65-100 please see **New product ball valve DN65-100**
- For easy installation and removal
- Integrated stainless steel mounting inserts
- Control time 90°<) 1-2 s
- Overall length according to EN 558-1
- Connecting dimensions: ISO 7005, EN 1092, BS 4504, DIN 2501; bolt circle PN 10

Option:

- Individual configuration of the valve (see form)

d [mm]	DN [mm]	PN	kv-value (Δp=1 bar) [l/min]	EPDM Code	FPM Code	kg
New 75	65	10	5000	**199 234 629**	**199 234 639**	8.600
New 90	80	10	7000	**199 234 630**	**199 234 640**	10.500
New 110	100	10	11000	**199 234 631**	**199 234 641**	14.800

d [mm]	D [mm]	H [mm]	H1 [mm]	H2 [mm]	H5 [mm]	H6 [mm]	L [mm]	L1 [mm]	L2 [mm]	L3 [mm]	L4 [mm]	L5 [mm]	L6 [mm]
New 75	166	262	85	156	70	93	284	218	136	290	70	276	65
New 90	200	281	105	168	78	100	300	259	141	310	70	341	72
New 110	238	292	123	175	86	110	340	287	164	350	120	369	80

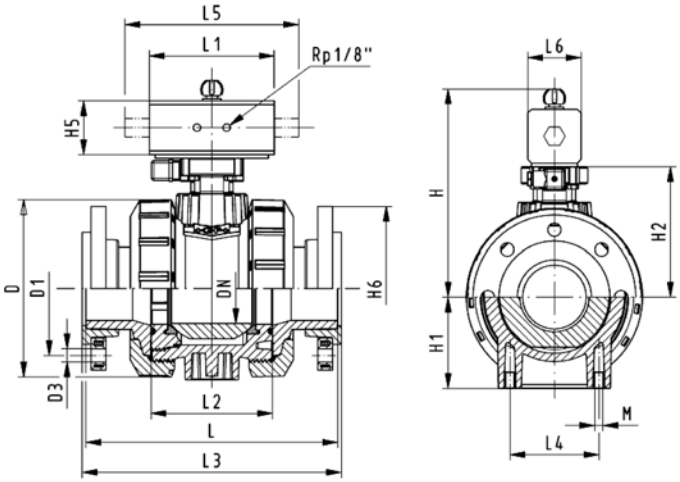

Ball valve type 230 PVC-C DA (Double acting)
Without manual override
With backing flanges PP-st metric

Model:

- Assignment of actuators: PA11 (DN10/15-25), PA21 (DN32-50), PA35 (DN65), PA40 (DN80), PA45 (DN100)
- Image and drawing DN65-100 please see **New product ball valve DN65-100**
- For easy installation and removal
- Integrated stainless steel mounting inserts
- Control time 90°<) 1-2 s
- Overall length according to EN 558-1
- Connecting dimensions: ISO 7005, EN 1092, BS 4504, DIN 2501; bolt circle PN 10

Option:

- Individual configuration of the valve (see form)

d [mm]	DN [mm]	PN	kv-value (Δp=1 bar) [l/min]	EPDM Code	FPM Code	kg
New 75	65	10	5000	**199 234 649**	**199 234 659**	7.400
New 90	80	10	7000	**199 234 650**	**199 234 660**	9.800
New 110	100	10	11000	**199 234 651**	**199 234 661**	13.100

d [mm]	D [mm]	H [mm]	H1 [mm]	H2 [mm]	H5 [mm]	H6 [mm]	L [mm]	L1 [mm]	L2 [mm]	L3 [mm]	L4 [mm]	L5 [mm]	L6 [mm]
New 75	166	257	85	156	66	93	284	144	136	290	70	190	60
New 90	200	274	105	168	70	100	300	152	141	310	70	198	65
New 110	238	273	123	175	78	110	340	169	164	350	120	235	72

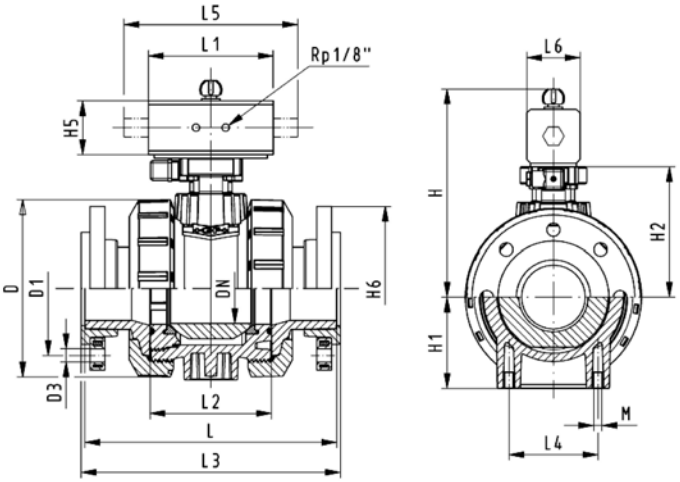

Copiable
Configurator GF ball valve type 546 PVC-C

You will find a large selection of different versions in our range of products. New system elements also provide you with new opportunities for use. In order for us to supply exactly the ball valve you need for you application, we have created a selection menu for you.
We supply what you put together.

Ball Valve
A01 Ball Valve 546

Material
B02 PVC-C

Dimension
C05 DN 10 3/8"
C06 DN 15 1/2"
C07 DN 20 3/4"
C08 DN 25 1"
C09 DN 32 1 1/4"
C10 DN 40 1 1/2"
C11 DN 50 2"
C12 DN 65 2 1/2"
C13 DN 80 3"
C14 DN 100 4"

Version
D01 Standard, PTFE ball seal
D02 oilfree, PTFE ball seal (only with specific connecting parts)
D03 silicon-free, PTFE ball seal (only with specific connecting parts)
D04 silicon-free, PVDF ball seal metric (only with specific connecting parts)

Seals
E01 EPDM seals
E02 FPM seals

Threaded inserts
F01 without threaded inserts
F02 with threaded inserts

Connecting parts
G11 PVC-C Cement socket metric
G12 PVC-C Cement socket JIS
G13 PVC-C Cement socket inch ASTM
G14 PVC-C Cement spigot metric
G15 PVC-C Threaded socket Rp
G16 PVC-C Threaded socket Rp reinforced (DN10-50)
G17 PVC-C Threaded socket NPT
G40 PE-100 Butt fusion metric
G41 PE-100 Butt fusion spigot SDR11 metric
G42 PE-100 Butt fusion spigot SDR17.6 metric (DN65-100)
G43 PE-100 Butt fusion spigot long SDR11 metric
G72 Backing flange PP-steel metric
G73 Backing flange PP-steel inch ANSI
G81 PVC-C Valve end blank

Multi-functional module
I01 No multi-functional module
I02 Empty module
I03 Module with 2 end switches Ag, Ni
I04 Module with 2 end switches Au
I05 Module with 2 inductive switches Namur
I06 Module with 2 inductive switches PNP
I07 Module with 2 inductive switches NPN

Lever
K01 Standard lever red
K02 Standard lever black
K11 Multi-functional lever red

Mounting plate
L01 without mounting plate
L02 with mounting plate

A01	B02	C	D	E	F	G	G	I	K	L
						left	right			

Copiable
GF ball valve type 546 with pneumatic actuator

It's so easy to configurate the type 546:
With the configurator, you have a choice of new pneumatic actuators PA11 and PA21 in 2 optimized sizes including a large range of accessories.

We supply what you put together.

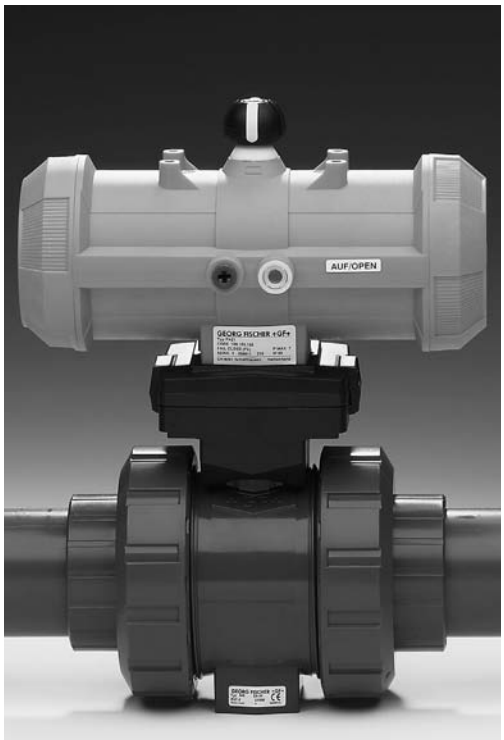

Pneumatic actuators PA11/PA21
P01 Fail safe to close PA11/PA21
P02 Fail safe to open PA11/21
P03 Double acting PA11/21
P30 Fail safe to close PA30/90
P31 Fail safe to open PA30/90
P32 Double acting PA30/90

Manual override
Q01 without manual override
Q02 with manual override

Stroke limiter
R01 without stroke limiter
R02 with stroke limiter

P	Q	R	

Ball valves

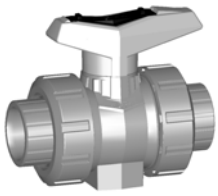

DN10/15 - 50

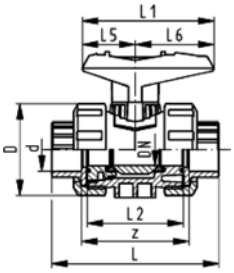

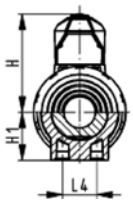

Ball valve type 546 ABS
With solvent cement sockets metric

Model:

- Image and drawing DN65-100 please see **New product ball valve DN65-100**
- For easy installation and removal
- z-dimension, valve end and valve nut are **not compatible** with type 346 (DN10/15-50) resp. type 370 (DN65-100)
- Ball seals PTFE
- Without mounting inserts

Option:

- Individual configuration of the valve (see form)
- Multifunctional module with integrated limit switches
- Pneumatic or electric actuators from +GF+

d [mm]	DN [mm]	PN	kv-value (Δp=1 bar) [l/min]	EPDM Code	kg
16	10	10	71	**169 546 001**	0.112
20	15	10	185	**169 546 002**	0.114
25	20	10	350	**169 546 003**	0.178
32	25	10	700	**169 546 004**	0.258
40	32	10	1000	**169 546 005**	0.457
50	40	10	1600	**169 546 006**	0.642
63	50	10	3100	**169 546 007**	1.175
New 75	65	10	5000	**169 546 008**	3.900
New 90	80	10	7000	**169 546 009**	5.700
New 110	100	10	11000	**169 546 010**	9.100

d [mm]	D [mm]	H [mm]	H1 [mm]	L [mm]	L1 [mm]	L2 [mm]	L4 [mm]	L5 [mm]	L6 [mm]	z [mm]
16	50	57	27	92	77	56	25	32	45	64
20	50	57	27	95	77	56	25	32	45	64
25	58	67	30	110	97	65	25	39	58	72
32	68	73	36	123	97	71	25	39	58	79
40	84	90	44	146	128	85	45	54	74	94
50	97	97	51	157	128	89	45	54	74	95
63	124	116	64	183	152	101	45	66	87	107
New 75	166	149	85	233	270	136	70	64	206	144
New 90	200	161	105	254	270	141	70	64	206	151
New 110	238	178	123	301	320	164	120	64	256	174

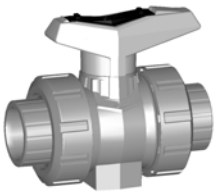

DN10/15 - 50

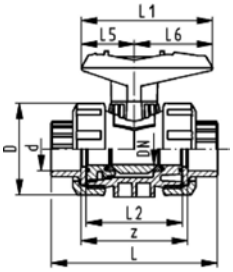

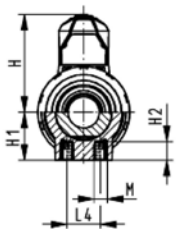

Ball valve type 546 ABS
With mounting inserts
With solvent cement sockets metric

Model:

- Image and drawing DN65-100 please see **New product ball valve DN65-100**
- For easy installation and removal
- z-dimension, valve end and valve nut are **not compatible** with type 346 (DN10/15-50) resp. type 370 (DN65-100)
- Ball seals PTFE
- Integrated stainless steel mounting inserts

Option:

- Individual configuration of the valve (see form)
- Multifunctional module with integrated limit switches
- Pneumatic or electric actuators from +GF+

d [mm]	DN [mm]	PN	kv-value (Δp=1 bar) [l/min]	EPDM Code	kg
16	10	10	71	**169 546 061**	0.112
20	15	10	185	**169 546 062**	0.114
25	20	10	350	**169 546 063**	0.178
32	25	10	700	**169 546 064**	0.258
40	32	10	1000	**169 546 065**	0.457
50	40	10	1600	**169 546 066**	0.642
63	50	10	3100	**169 546 067**	1.175
New 75	65	10	5000	**169 546 068**	3.900
New 90	80	10	7000	**169 546 069**	5.700
New 110	100	10	11000	**169 546 070**	9.100

d [mm]	D [mm]	H [mm]	H1 [mm]	H2 [mm]	L [mm]	L1 [mm]	L2 [mm]	L4 [mm]	L5 [mm]	L6 [mm]	M	z [mm]
16	50	57	27	12	92	77	56	25	32	45	M6	64
20	50	57	27	12	95	77	56	25	32	45	M6	64
25	58	67	30	12	110	97	65	25	39	58	M6	72
32	68	73	36	12	123	97	71	25	39	58	M6	79
40	84	90	44	15	146	128	85	45	54	74	M8	94
50	97	97	51	15	157	128	89	45	54	74	M8	95
63	124	116	64	15	183	152	101	45	66	87	M8	107
New 75	166	149	85	15	233	270	136	70	64	206	M8	144
New 90	200	161	105	15	254	270	141	70	64	206	M8	151
New 110	238	178	123	22	301	320	164	120	64	256	M12	174

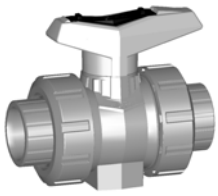

DN10/15 - 50

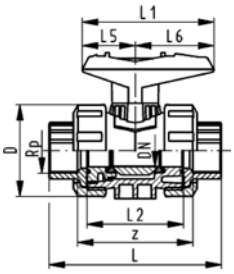

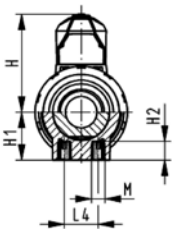

Ball valve type 546 ABS
With mounting inserts
With threaded sockets Rp

Model:

- Image and drawing DN65-100 please see **New product ball valve DN65-100**
- For easy installation and removal
- z-dimension, valve end and valve nut are **not compatible** with type 346 (DN10/15-50) resp. type 370 (DN65-100)
- Ball seals PTFE
- Integrated stainless steel mounting inserts

Option:

- Individual configuration of the valve (see form)
- Multifunctional module with integrated limit switches
- Pneumatic or electric actuators from +GF+

Rp [inch]	DN [mm]	PN	kv-value (Δp=1 bar) [l/min]	EPDM Code	kg
⅜	10	10	71	**169 546 021**	0.112
½	15	10	185	**169 546 022**	0.114
¾	20	10	350	**169 546 023**	0.178
1	25	10	700	**169 546 024**	0.258
1 ¼	32	10	1000	**169 546 025**	0.457
1 ½	40	10	1600	**169 546 026**	0.642
2	50	10	3100	**169 546 027**	1.175

Rp [inch]	D [mm]	H [mm]	H1 [mm]	H2 [mm]	L [mm]	L1 [mm]	L2 [mm]	L4 [mm]	L5 [mm]	L6 [mm]	M	z [mm]
⅜	50	57	27	12	95	77	56	25	32	45	M6	69
½	50	57	27	12	100	77	56	25	32	45	M6	67
¾	58	67	30	12	114	97	65	25	39	58	M6	78
1	68	73	36	12	127	97	71	25	39	58	M6	85
1 ¼	84	90	44	15	146	128	85	45	54	74	M8	100
1 ½	97	97	51	15	152	128	89	45	54	74	M8	106
2	124	116	64	15	177	152	101	45	66	87	M8	121

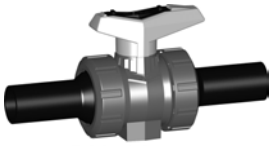

DN10/15 - 50

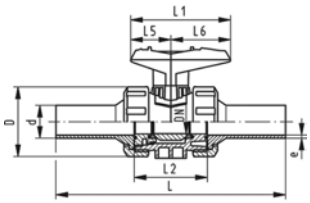

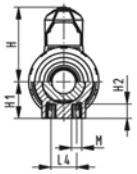

Ball valve type 546 ABS
With mounting inserts
With butt fusion spigots long PE 100 SDR11 metric

Model:

- Image and drawing DN65-100 please see **New product ball valve DN65-100**
- For easy installation and removal
- z-dimension, valve end and valve nut are **not compatible** with type 346 (DN10/15-50) resp. type 370 (DN65-100)
- Ball seals PTFE
- Integrated stainless steel mounting inserts

Option:

- Individual configuration of the valve (see form)
- Multifunctional module with integrated limit switches
- Pneumatic or electric actuators from +GF+

d [mm]	DN [mm]	PN	kv-value (Δp=1 bar) [l/min]	EPDM Code	kg
20	15	16	185	**800 024 832**	0.150
25	20	16	350	**800 024 834**	0.220
32	25	16	700	**800 015 141**	0.310
40	32	16	1000	**800 015 142**	0.530
50	40	16	1600	**800 015 179**	0.740
63	50	16	3100	**800 015 143**	1.370

d [mm]	D [mm]	H [mm]	H1 [mm]	H2 [mm]	L [mm]	L1 [mm]	L2 [mm]	L4 [mm]	L5 [mm]	L6 [mm]	M	e [mm]
20	50	57	27	12	193	77	56	25	32	45	M6	2,3
25	58	67	30	12	216	97	65	25	39	58	M6	2,3
32	68	73	36	12	223	97	71	25	39	58	M6	3
40	84	90	44	15	249	128	85	45	54	74	M8	3,7
50	97	97	51	15	271	128	89	45	54	74	M8	4,6
63	124	116	64	15	321	152	101	45	66	87	M8	5,8

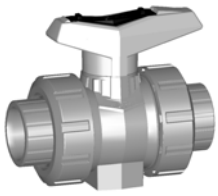

DN10/15 - 50

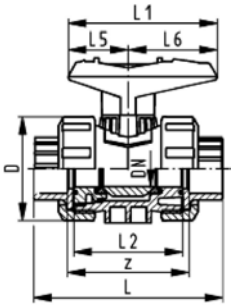

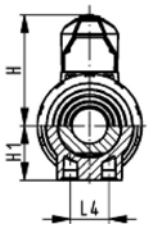

Ball valve type 546 ABS
With solvent cement sockets Inch BS

Model:

- Image and drawing DN65-100 please see **New product ball valve DN65-100**
- For easy installation and removal
- z-dimension, valve end and valve nut are **not compatible** with type 346 (DN10/15-50) resp. type 370 (DN65-100)
- Ball seals PTFE
- Without mounting inserts

Option:

- Individual configuration of the valve (see form)
- Multifunctional module with integrated limit switches
- Pneumatic or electric actuators from +GF+

Inch	DN [mm]	PN	kv-value (Δp=1 bar) [l/min]	EPDM Code	kg
⅜	10	10	71	**169 546 201**	0.112
½	15	10	185	**169 546 202**	0.114
¾	20	10	350	**169 546 203**	0.178
1	25	10	700	**169 546 204**	0.258
1 ¼	32	10	1000	**169 546 205**	0.457
1 ½	40	10	1600	**169 546 206**	0.642
2	50	10	3100	**169 546 207**	1.175
New	65	10	5000	**169 546 008**	3.900
New 3	80	10	7000	**169 546 209**	5.700
New 4	100	10	11000	**169 546 210**	9.100

Inch	D [mm]	H [mm]	H1 [mm]	L [mm]	L1 [mm]	L2 [mm]	L4 [mm]	L5 [mm]	L6 [mm]	z [mm]
⅜	50	57	27	92	77	56	25	32	45	60
½	50	57	27	95	77	56	25	32	45	60
¾	58	67	30	110	97	65	25	39	58	69
1	68	73	36	123	97	71	25	39	58	75
1 ¼	84	90	44	146	128	85	45	54	74	89
1 ½	97	97	51	157	128	89	45	54	74	97
2	124	116	64	183	152	101	45	66	87	110
New	166	149	85	233	270	136	70	64	206	144
New 3	200	161	105	254	270	141	70	64	206	151
New 4	238	178	123	301	320	164	120	64	256	174

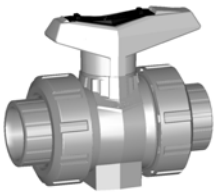

DN10/15 - 50

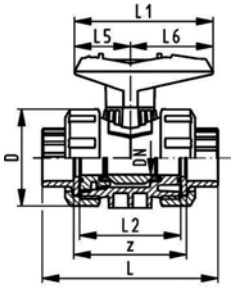

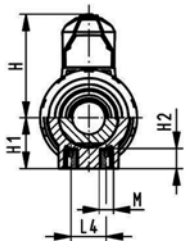

Ball valve type 546 ABS
With mounting inserts
With solvent cement sockets Inch BS

Model:

- Image and drawing DN65-100 please see **New product ball valve DN65-100**
- For easy installation and removal
- z-dimension, valve end and valve nut are **not compatible** with type 346 (DN10/15-50) resp. type 370 (DN65-100)
- Ball seals PTFE
- Integrated stainless steel mounting inserts

Option:

- Individual configuration of the valve (see form)
- Multifunctional module with integrated limit switches
- Pneumatic or electric actuators from +GF+

Inch	DN [mm]	PN	kv-value (Δp=1 bar) [l/min]	EPDM Code	kg
⅜	10	10	71	**169 546 241**	0.112
½	15	10	185	**169 546 242**	0.114
¾	20	10	350	**169 546 243**	0.178
1	25	10	700	**169 546 244**	0.258
1 ¼	32	10	1000	**169 546 245**	0.457
1 ½	40	10	1600	**169 546 246**	0.642
2	50	10	3100	**169 546 247**	1.175
New	65	10	5000	**169 546 068**	3.900
New 3	80	10	7000	**169 546 249**	5.700
New 4	100	10	11000	**169 546 250**	9.100

Inch	D [mm]	H [mm]	H1 [mm]	H2 [mm]	L [mm]	L1 [mm]	L2 [mm]	L4 [mm]	L5 [mm]	L6 [mm]	M	z [mm]
⅜	50	57	27	12	92	77	56	25	32	45	M6	60
½	50	57	27	12	95	77	56	25	32	45	M6	60
¾	58	67	30	12	110	97	65	25	39	58	M6	69
1	68	73	36	12	123	97	71	25	39	58	M6	75
1 ¼	84	90	44	15	146	128	85	45	54	74	M8	89
1 ½	97	97	51	15	157	128	89	45	54	74	M8	97
2	124	116	64	15	183	152	101	45	66	87	M8	110
New	166	149	85	15	233	270	136	70	64	206	M8	144
New 3	200	161	105	15	254	270	141	70	64	206	M8	151
New 4	238	178	123	22	301	320	164	120	64	256	M12	174

DN10/15 - 50

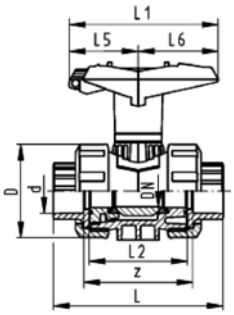

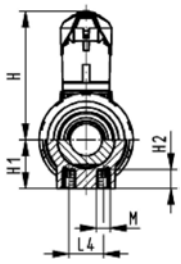

Ball valve type 546 ABS
With lockable handle
With solvent cement sockets metric

Model:

- Image and drawing DN65-100 please see **New product ball valve DN65-100**
- For easy installation and removal
- z-dimension, valve end and valve nut are **not compatible** with type 346 (DN10/15-50) resp. type 370 (DN65-100)
- Ball seals PTFE
- Integrated stainless steel mounting inserts
- Lockable hand lever with ratchet settings

Option:

- Individual configuration of the valve (see form)
- Multifunctional module with integrated limit switches
- Pneumatic or electric actuators from +GF+

d [mm]	DN [mm]	PN	kv-value (Δp=1 bar) [l/min]	EPDM Code	kg
16	10	10	71	**169 546 081**	0.121
20	15	10	185	**169 546 082**	0.123
25	20	10	350	**169 546 083**	0.193
32	25	10	700	**169 546 084**	0.273
40	32	10	1000	**169 546 085**	0.480
50	40	10	1600	**169 546 086**	0.665
63	50	10	3100	**169 546 087**	1.205
New 75	65	10	5000	**169 546 088**	4.200
New 90	80	10	7000	**169 546 089**	6.100
New 110	100	10	11000	**169 546 090**	9.400

d [mm]	D [mm]	H [mm]	H1 [mm]	H2 [mm]	L [mm]	L1 [mm]	L2 [mm]	L4 [mm]	L5 [mm]	L6 [mm]	M	z [mm]
16	50	79	27	12	92	87	56	25	42	45	M6	64
20	50	79	27	12	95	87	56	25	42	45	M6	64
25	58	88	30	12	110	108	65	25	50	58	M6	72
32	68	94	36	12	123	108	71	25	50	58	M6	79
40	84	113	44	15	146	140	85	45	66	75	M8	94
50	97	119	51	15	157	140	89	45	66	75	M8	95
63	124	141	64	15	183	165	101	45	78	87	M8	107
New 75	166	224	85	15	233	270	136	70	64	206	M8	144
New 90	200	235	105	15	254	270	141	70	64	206	M8	151
New 110	238	245	123	22	301	320	164	120	64	256	M12	174

DN10/15 - 50

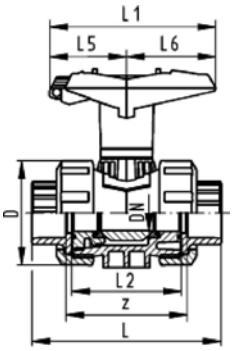

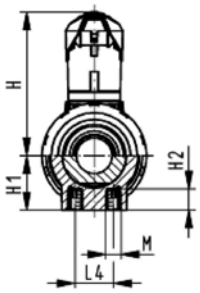

Ball valve type 546 ABS
With lockable handle
With solvent cement sockets Inch BS

Model:

- Image and drawing DN65-100 please see **New product ball valve DN65-100**
- For easy installation and removal
- z-dimension, valve end and valve nut are **not compatible** with type 346 (DN10/15-50) resp. type 370 (DN65-100)
- Ball seals PTFE
- Integrated stainless steel mounting inserts
- Lockable hand lever with ratchet settings

Option:

- Individual configuration of the valve (see form)
- Multifunctional module with integrated limit switches
- Pneumatic or electric actuators from +GF+

Inch	DN [mm]	PN	kv-value (Δp=1 bar) [l/min]	EPDM Code	kg
⅜	10	10	71	**169 546 221**	0.121
½	15	10	185	**169 546 222**	0.123
¾	20	10	350	**169 546 223**	0.193
1	25	10	700	**169 546 224**	0.273
1 ¼	32	10	1000	**169 546 225**	0.480
1 ½	40	10	1600	**169 546 226**	0.665
2	50	10	3100	**169 546 227**	1.205
New	65	10	5000	**169 546 088**	4.200
New 3	80	10	7000	**169 546 229**	6.100
New 4	100		11000	**169 546 230**	9.400

Inch	D [mm]	H [mm]	H1 [mm]	H2 [mm]	L [mm]	L1 [mm]	L2 [mm]	L4 [mm]	L5 [mm]	L6 [mm]	M	z [mm]
⅜	50	79	27	12	92	87	56	25	42	45	M6	60
½	50	79	27	12	95	87	56	25	42	45	M6	60
¾	58	88	30	12	110	108	65	25	50	58	M6	69
1	68	94	36	12	123	108	71	25	50	58	M6	75
1 ¼	84	113	44	15	146	140	85	45	66	75	M8	89
1 ½	97	119	51	15	157	140	89	45	66	75	M8	97
2	124	141	64	15	183	165	101	45	78	87	M8	110
New	166	224	85	15	233	270	136	70	64	206	M8	144
New 3	200	235	105	15	254	270	141	70	64	206	M8	151
New 4	238	245	123	22	301	320	164	120	64	256	M12	174

Ball valves

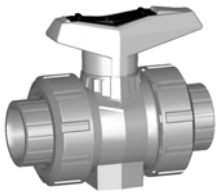

DN10/15 - 50

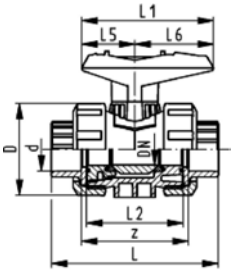

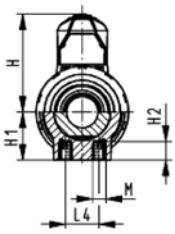

Ball valve type 546 ABS SF
With mounting inserts
With solvent cement sockets metric

Model:

- Image and drawing DN65-100 please see **New product ball valve DN65-100**
- Silicon-free / paint-compatible
- For easy installation and removal
- z-dimension, valve end and valve nut are **not compatible** with type 346 (DN10/15-50) resp. type 370 (DN65-100)
- Ball seals PVDF
- Integrated stainless steel mounting inserts

Option:

- Individual configuration of the valve (see form)
- Multifunctional module with integrated limit switches

d [mm]	DN [mm]	PN	kv-value (Δp=1 bar) [l/min]	EPDM Code	kg
16	10	10	71	**169 546 601**	0.112
20	15	10	185	**169 546 602**	0.114
25	20	10	350	**169 546 603**	0.178
32	25	10	700	**169 546 604**	0.258
40	32	10	1000	**169 546 605**	0.457
50	40	10	1600	**169 546 606**	0.642
63	50	10	3100	**169 546 607**	1.175
New 75	65	10	5000	**169 546 608**	3.900
New 90	80	10	7000	**169 546 609**	5.700
New 110	100	10	11000	**169 546 610**	9.100

d [mm]	D [mm]	H [mm]	H1 [mm]	H2 [mm]	L [mm]	L1 [mm]	L2 [mm]	L4 [mm]	L5 [mm]	L6 [mm]	M	z [mm]
16	50	57	27	12	92	77	56	25	32	45	M6	64
20	50	57	27	12	95	77	56	25	32	45	M6	64
25	58	67	30	12	110	97	65	25	39	58	M6	72
32	68	73	36	12	123	97	71	25	39	58	M6	79
40	84	90	44	15	146	128	85	45	54	74	M8	94
50	97	97	51	15	157	128	89	45	54	74	M8	95
63	124	116	64	15	183	152	101	45	66	87	M8	107
New 75	166	149	85	15	233	270	136	70	64	206	M8	144
New 90	200	161	105	15	254	270	141	70	64	206	M8	151
New 110	238	178	123	22	301	320	164	120	64	256	M12	174

Copiable
Configurator GF ball valve type 546 ABS

You will find a large selection of different versions in our range of products. New system elements also provide you with new opportunities for use. In order for us to supply exactly the ball valve you need for you application, we have created a selection menu for you.
We supply what you put together.

Ball Valve
A01 Ball Valve 546

Material
B03 ABS

Nominal width
C05 DN 10 3/8"
C06 DN 15 1/2"
C07 DN 20 3/4"
C08 DN 25 1"
C09 DN 32 1 1/4"
C10 DN 40 1 1/2"
C11 DN 50 2"
C12 DN 65 2 1/2"
C13 DN 80 3"
C14 DN 100 4"

Version
D01 Standard, PTFE ball seal
D04 silicon-free, PVDF ball seal metric (only with specific connecting parts)

Seals
E01 EPDM Seals
E02 FPM Seals

Threaded inserts
F01 without threaded inserts
F02 with threaded inserts

Connecting parts
G20 ABS Cement socket metric
G21 ABS Cement socket inch BS
G22 ABS Threaded socket Rp
G23 ABS Threaded socket Rp reinforced
G40 PE-100 Fusion socket metric
G41 PE-100 Butt fusion spigot SDR11 metric
G42 PE-100 Butt fusion spigot SDR17.6 metric
G43 PE-100 Butt fusion spigot long SDR11 metric
G44 PE-100 Butt fusion spigot long SDR17.6 metric (DN65-100)
G83 ABS Valve end blank

Multi-functional module
I01 No multi-functional module
I02 Empty module
I03 Module with 2 end switches Ag, Ni
I04 Module with 2 end switches Au
I05 Module with 2 inductive switches Namur
I06 Module with 2 inductive switches PNP
I07 Module with 2 inductive switches NPN

Lever
K01 Standard lever red
K02 Standard lever black
K11 Multi-functional lever red

Mounting plate
L01 without mounting plate
L02 with mounting plate

A01	B03	C	D	E	F	G	G	I	K	L
						left	right			

Ball valves electric

DN10/15 - 50

Ball valve type 107 ABS 100-230V
With manual emergency override
With solvent cement sockets metric

Model:

- Built on with electric actuator EA11
- Voltage 100-230 V, 50-60 Hz
- Control range 90°<)
- Control time 5 s/90°<)
- For easy installation and removal
- Integrated stainless steel mounting inserts

Option:

- Individual configuration of the valve (see form)

d [mm]	DN [mm]	PN	kv-value (Δp=1 bar) [l/min]	EPDM Code	kg
16	10	10	70	**199 107 082**	2.072
20	15	10	185	**199 107 083**	2.072
25	20	10	350	**199 107 084**	2.189
32	25	10	700	**199 107 085**	2.189
40	32	10	1000	**199 107 086**	2.592
50	40	10	1600	**199 107 087**	2.914
63	50	10	3100	**199 107 088**	3.772

d [mm]	D [mm]	H [mm]	H1 [mm]	H2 [mm]	H3 [mm]	H5 [mm]	L [mm]	L1 [mm]	L2 [mm]	L4 [mm]	L5 [mm]	L6 [mm]	L7 [mm]	L8 [mm]	z [mm]
16	50	200	27	64	64	137	92	161	56	25	77	83	122	33	64
20	50	200	27	64	64	137	95	161	56	25	77	83	122	33	64
25	58	209	30	73	64	137	110	161	65	25	77	83	122	33	72
32	68	209	36	73	64	137	123	161	71	25	77	83	122	33	79
40	84	220	44	84	64	137	146	161	85	45	77	83	122	33	94
50	97	220	51	84	64	137	157	161	89	45	77	83	122	33	95
63	124	243	64	106	64	137	183	161	101	45	77	83	122	33	107

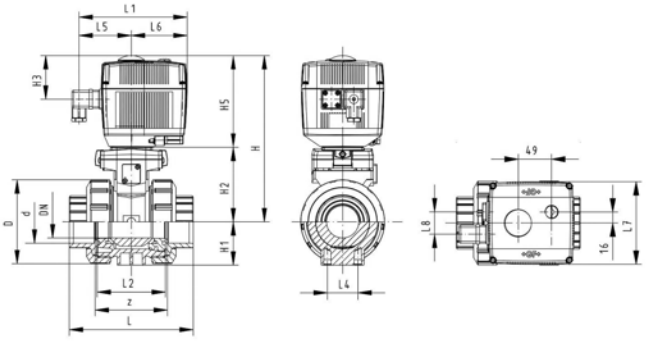

DN10/15 - 50

Ball valve type 107 ABS 24V
With manual emergency override
With solvent cement sockets metric

Model:

- Built on with electric actuator EA11
- For easy installation and removal
- Integrated stainless steel mounting inserts
- Voltage 24 V AC/DC
- Control range 90°<)
- Control time 5 s/90°<)

Option:

- Individual configuration of the valve (see form)

d [mm]	DN [mm]	PN	kv-value (Δp=1 bar) [l/min]	EPDM Code	kg
16	10	10	70	**199 107 092**	2.072
20	15	10	185	**199 107 093**	2.072
25	20	10	350	**199 107 094**	2.189
32	25	10	700	**199 107 095**	2.189
40	32	10	1000	**199 107 096**	2.592
50	40	10	1600	**199 107 097**	2.914
63	50	10	3100	**199 107 098**	3.772

d [mm]	D [mm]	H [mm]	H1 [mm]	H2 [mm]	H3 [mm]	H5 [mm]	L [mm]	L1 [mm]	L2 [mm]	L4 [mm]	L5 [mm]	L6 [mm]	L7 [mm]	L8 [mm]	z [mm]
16	50	200	27	64	64	137	92	161	56	25	77	83	122	33	64
20	50	200	27	64	64	137	95	161	56	25	77	83	122	33	64
25	58	209	30	73	64	137	110	161	65	25	77	83	122	33	72
32	68	209	36	73	64	137	123	161	71	25	77	83	122	33	79
40	84	220	44	84	64	137	146	161	85	45	77	83	122	33	94
50	97	220	51	84	64	137	157	161	89	45	77	83	122	33	95
63	124	243	64	106	64	137	183	161	101	45	77	83	122	33	107

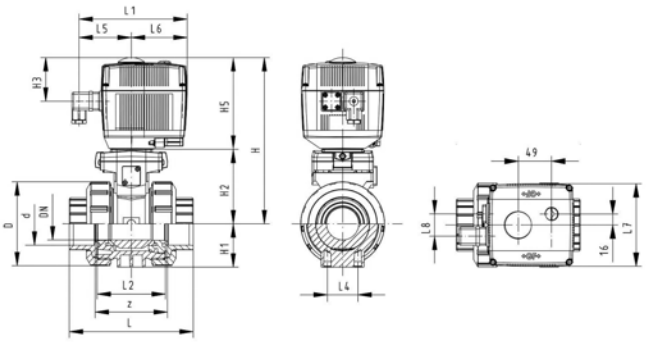

DN10/15 - 50

Ball valve type 107 ABS 100-230V
With manual emergency override
With threaded sockets Rp

Model:

- Built on with electric actuator EA11
- Voltage 100-230 V, 50-60 Hz
- Control range 90°<)
- Control time 5 s/90°<)
- For easy installation and removal
- Integrated stainless steel mounting inserts

Option:

- Individual configuration of the valve (see form)

Rp [inch]	DN [mm]	PN	kv-value (Δp=1 bar) [l/min]	EPDM Code	kg
⅜	10	10	70	**199 107 682**	2.100
½	15	10	185	**199 107 683**	2.100
¾	20	10	350	**199 107 684**	2.200
1	25	10	700	**199 107 685**	2.300
1 ¼	32	10	1000	**199 107 686**	2.600
1 ½	40	10	1600	**199 107 687**	3.000
2	50	10	3100	**199 107 688**	3.800

Rp [inch]	D [mm]	H [mm]	H1 [mm]	H2 [mm]	H3 [mm]	H5 [mm]	L [mm]	L1 [mm]	L2 [mm]	L4 [mm]	L5 [mm]	L6 [mm]	L7 [mm]	L8 [mm]	z [mm]
⅜	50	200	27	64	64	137	92	161	56	25	77	83	122	33	64
½	50	200	27	64	64	137	95	161	56	25	77	83	122	33	64
¾	58	209	30	73	64	137	110	161	65	25	77	83	122	33	72
1	68	209	36	73	64	137	123	161	71	25	77	83	122	33	79
1 ¼	84	220	44	84	64	137	146	161	85	45	77	83	122	33	94
1 ½	97	220	51	84	64	137	157	161	89	45	77	83	122	33	95
2	124	243	64	106	64	137	183	161	101	45	77	83	122	33	107

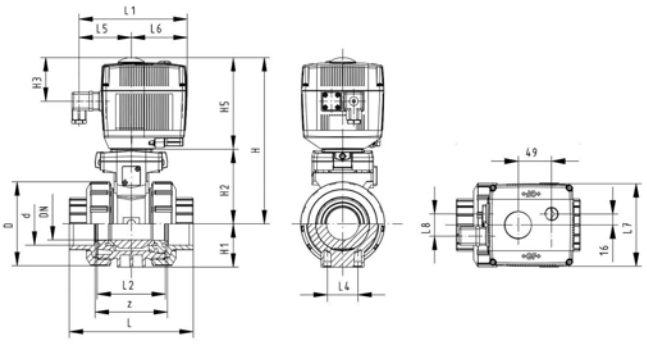

DN10/15 - 50

Ball valve type 107 ABS 24V
With manual emergency override
With threaded sockets Rp

Model:

- Built on with electric actuator EA11
- For easy installation and removal
- Integrated stainless steel mounting inserts
- Voltage 24 V AC/DC
- Control range 90°<)
- Control time 5 s/90°<)

Option:

- Individual configuration of the valve (see form)

Rp [inch]	DN [mm]	PN	kv-value (Δp=1 bar) [l/min]	EPDM Code	kg
⅜	10	10	70	**199 107 692**	2.100
½	15	10	185	**199 107 693**	2.100
¾	20	10	350	**199 107 694**	2.200
1	25	10	700	**199 107 695**	2.300
1 ¼	32	10	1000	**199 107 696**	2.600
1 ½	40	10	1600	**199 107 697**	3.000
2	50	10	3100	**199 107 698**	3.800

Rp [inch]	D [mm]	H [mm]	H1 [mm]	H2 [mm]	H3 [mm]	H5 [mm]	L [mm]	L1 [mm]	L2 [mm]	L4 [mm]	L5 [mm]	L6 [mm]	L7 [mm]	L8 [mm]	z [mm]
⅜	50	200	27	64	64	137	92	161	56	25	77	83	122	33	64
½	50	200	27	64	64	137	95	161	56	25	77	83	122	33	64
¾	58	209	30	73	64	137	110	161	65	25	77	83	122	33	72
1	68	209	36	73	64	137	123	161	71	25	77	83	122	33	79
1 ¼	84	220	44	84	64	137	146	161	85	45	77	83	122	33	94
1 ½	97	220	51	84	64	137	157	161	89	45	77	83	122	33	95
2	124	243	64	106	64	137	183	161	101	45	77	83	122	33	107

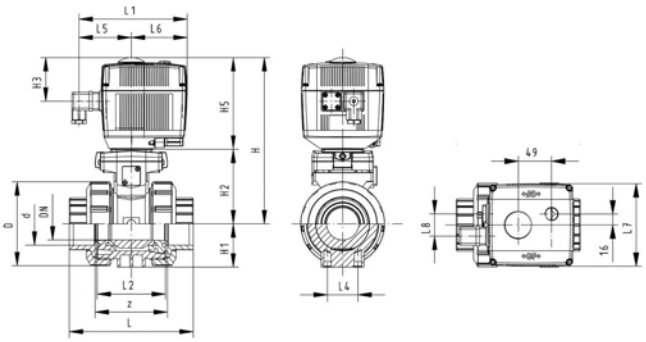

DN10/15 - 50

Ball valve type 107 ABS 100-230V
With manual emergency override
With solvent cement sockets Inch BS

Model:

- Built on with electric actuator EA11
- Voltage 100-230 V, 50-60 Hz
- Control range 90°<)
- Control time 5 s/90°<)
- For easy installation and removal
- Integrated stainless steel mounting inserts

Option:

- Individual configuration of the valve (see form)

Inch	DN [mm]	PN	kv-value (Δp=1 bar) [l/min]	EPDM Code	kg
⅜	10	10	70	**199 107 182**	2.100
½	15	10	185	**199 107 183**	2.100
¾	20	10	350	**199 107 184**	2.200
1	25	10	700	**199 107 185**	2.300
1 ¼	32	10	1000	**199 107 186**	2.600
1 ½	40	10	1600	**199 107 187**	3.000
2	50	10	3100	**199 107 188**	3.800

Inch	D [mm]	H [mm]	H1 [mm]	H2 [mm]	H3 [mm]	H5 [mm]	L [mm]	L1 [mm]	L2 [mm]	L4 [mm]	L5 [mm]	L6 [mm]	L7 [mm]	L8 [mm]	z [mm]
⅜	50	200	27	64	64	137	92	161	56	25	79	83	122	67	60
½	50	200	27	64	64	137	95	161	56	25	79	83	122	67	60
¾	58	209	30	73	64	137	110	161	65	25	79	83	122	67	69
1	68	209	36	73	64	137	123	161	71	25	79	83	122	67	75
1 ¼	84	220	44	84	64	137	146	161	85	45	79	83	122	67	89
1 ½	97	220	51	84	64	137	157	161	89	45	79	83	122	67	97
2	124	243	64	106	64	137	183	161	101	45	79	83	122	67	110

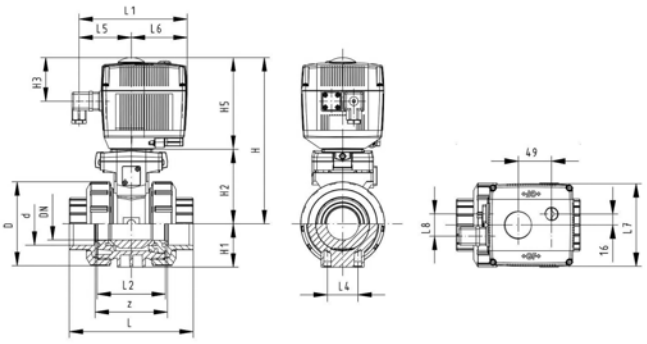

DN10/15 - 50

Ball valve type 107 ABS 24V
With manual emergency override
With solvent cement sockets Inch BS

Model:

- Built on with electric actuator EA11
- Voltage 24 V AC/DC
- Control range 90°<)
- Control time 5 s/90°<)
- For easy installation and removal
- Integrated stainless steel mounting inserts

Option:

- Individual configuration of the valve (see form)

Inch	DN [mm]	PN	kv-value (Δp=1 bar) [l/min]	EPDM Code	kg
⅜	10	10	70	**199 107 192**	2.100
½	15	10	185	**199 107 193**	2.100
¾	20	10	350	**199 107 194**	2.200
1	25	10	700	**199 107 195**	2.300
1 ¼	32	10	1000	**199 107 196**	2.600
1 ½	40	10	1600	**199 107 197**	3.000
2	50	10	3100	**199 107 198**	3.800

Inch	D [mm]	H [mm]	H1 [mm]	H2 [mm]	H3 [mm]	H5 [mm]	L [mm]	L1 [mm]	L2 [mm]	L4 [mm]	L5 [mm]	L6 [mm]	L7 [mm]	L8 [mm]	z [mm]
⅜	50	200	27	64	64	137	92	161	56	25	79	83	122	67	60
½	50	200	27	64	64	137	95	161	56	25	79	83	122	67	60
¾	58	209	30	73	64	137	110	161	65	25	79	83	122	67	69
1	68	209	36	73	64	137	123	161	71	25	79	83	122	67	75
1 ¼	84	220	44	84	64	137	146	161	85	45	79	83	122	67	89
1 ½	97	220	51	84	64	137	157	161	89	45	79	83	122	67	97
2	124	243	64	106	64	137	183	161	101	45	79	83	122	67	110

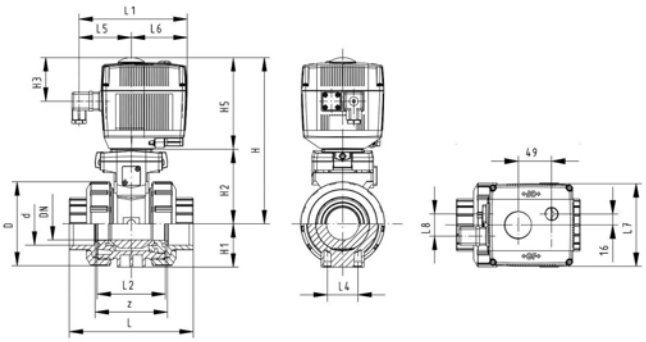

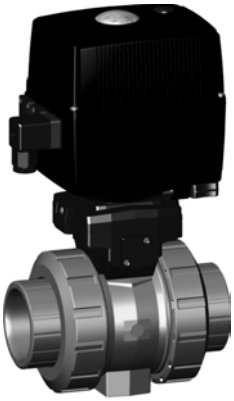

DN10/15 - 50

Ball valve type 130 ABS 100-230V
With manual emergency override
With solvent cement sockets metric

Model:

- Assignment of actuators EA21 (DN10/15-50), EA31 (DN65-100 if available)
- Image and drawing DN65-100 please see **New product ball valve DN65-100**
- For easy installation and removal
- Integrated stainless steel mounting inserts
- Voltage 100-230 V, 50-60 Hz
- Control range 90°<)
- Control time: EA21: 5s/90°<), EA31: 15s/90°<)

Option:

- Individual configuration of the valve (see form)

d [mm]	DN [mm]	PN	kv-value (Δp=1 bar) [l/min]	EPDM Code	kg
16	10	10	70	**199 130 702**	2.100
20	15	10	185	**199 130 703**	2.100
25	20	10	350	**199 130 704**	2.200
32	25	10	700	**199 130 705**	2.300
40	32	10	1000	**199 130 706**	2.600
50	40	10	1600	**199 130 707**	3.000
63	50	10	3100	**199 130 708**	3.800
New 75	65	10	5000	**199 130 709**	3.500
New 90	80	10	7000	**199 130 710**	4.300
New 110	100	10	11000	**199 130 711**	5.400

d [mm]	D [mm]	H [mm]	H1 [mm]	H2 [mm]	H3 [mm]	H5 [mm]	L [mm]	L1 [mm]	L2 [mm]	L4 [mm]	L5 [mm]	L6 [mm]	L7 [mm]	z [mm]
16	50	231	27	64	94	167	92	180	56	25	97	83	122	64
20	50	231	27	64	94	167	95	180	56	25	97	83	122	64
25	58	240	30	73	94	167	110	180	65	25	97	83	122	72
32	68	240	36	73	94	167	123	180	71	25	97	83	122	79
40	84	251	44	84	94	167	146	180	85	45	97	83	122	94
50	97	251	51	84	94	167	157	180	89	45	97	83	122	95
63	124	273	64	106	94	167	183	180	101	45	97	83	122	107
New 75	166	346	85	156	94	190	233	180	136	70	98	83	122	144
New 90	200	358	105	168	94	190	254	180	141	70	98	83	122	151
New 110	238	365	123	175	94	190	301	180	164	120	98	83	122	174

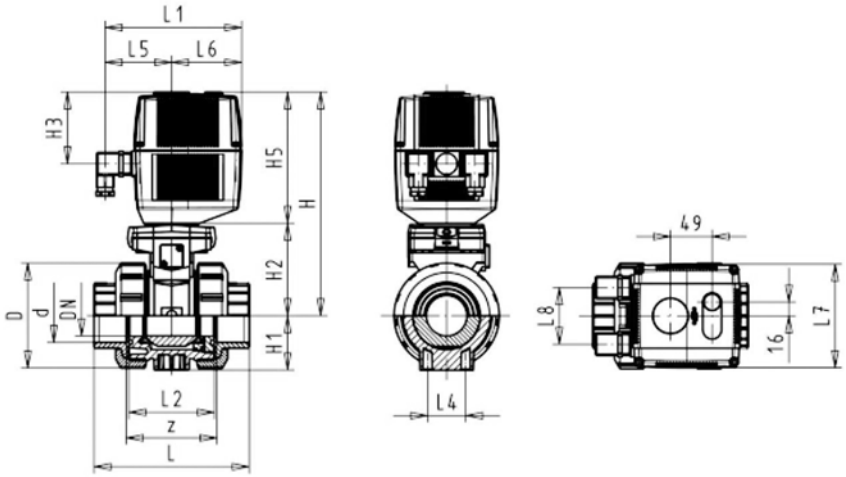

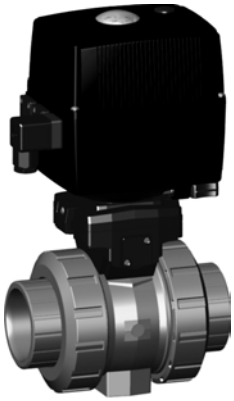

DN10/15 - 50

Ball valve type 130 ABS 24V
With manual emergency override
With solvent cement sockets metric

Model:

- Assignment of actuators EA21 (DN10/15-50), EA31 (DN65-100 if available)
- Image and drawing DN65-100 please see **New product ball valve DN65-100**
- For easy installation and removal
- Integrated stainless steel mounting inserts
- Voltage 24 V AC/DC
- Control range 90°<)
- Control time: EA21: 5s/90°<), EA31: 15s/90°<)

Option:

- Individual configuration of the valve (see form)

d [mm]	DN [mm]	PN	kv-value (Δp=1 bar) [l/min]	EPDM Code	kg
16	10	10	70	**199 130 742**	2.100
20	15	10	185	**199 130 743**	2.100
25	20	10	350	**199 130 744**	2.200
32	25	10	700	**199 130 745**	2.300
40	32	10	1000	**199 130 746**	2.600
50	40	10	1600	**199 130 747**	3.000
63	50	10	3100	**199 130 748**	3.800
New 75	65	10	5000	**199 130 749**	3.500
New 90	80	10	7000	**199 130 750**	4.300
New 110	100	10	11000	**199 130 751**	5.400

d [mm]	D [mm]	H [mm]	H1 [mm]	H2 [mm]	H3 [mm]	H5 [mm]	L [mm]	L1 [mm]	L2 [mm]	L4 [mm]	L5 [mm]	L6 [mm]	L7 [mm]	z [mm]
16	50	231	27	64	94	167	92	180	56	25	97	83	122	64
20	50	231	27	64	94	167	95	180	56	25	97	83	122	64
25	58	240	30	73	94	167	110	180	65	25	97	83	122	72
32	68	240	36	73	94	167	123	180	71	25	97	83	122	79
40	84	251	44	84	94	167	146	180	85	45	97	83	122	94
50	97	251	51	84	94	167	157	180	89	45	97	83	122	95
63	124	273	64	106	94	167	183	180	101	45	97	83	122	107
New 75	166	346	85	156	94	190	233	180	136	70	98	83	122	144
New 90	200	358	105	168	94	190	254	180	141	70	98	83	122	151
New 110	238	365	123	175	94	190	301	180	164	120	98	83	122	174

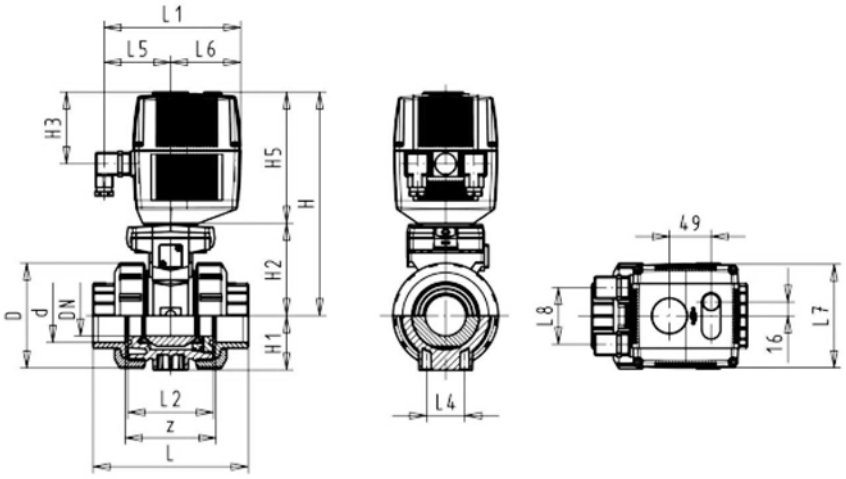

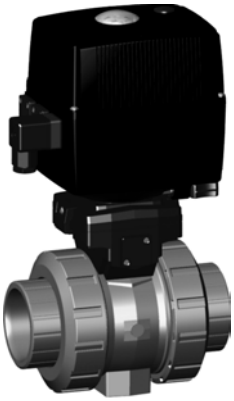

DN10/15 - 50

Ball valve type 130 ABS 100-230V
With manual emergency override
With threaded sockets Rp

Model:

- Assignment of actuators EA21 (DN10/15-50), EA31 (DN65-100 if available)
- Image and drawing DN65-100 please see **New product ball valve DN65-100**
- For easy installation and removal
- Integrated stainless steel mounting inserts
- Voltage 100-230 V, 50-60 Hz
- Control range 90°<)
- Control time: EA21: 5s/90°<), EA31: 15s/90°<)

Option:

- Individual configuration of the valve (see form)

Rp [inch]	DN [mm]	PN	kv-value (Δp=1 bar) [l/min]	EPDM Code	kg
⅜	10	10	70	**199 130 722**	2.100
½	15	10	185	**199 130 723**	2.100
¾	20	10	350	**199 130 724**	2.200
1	25	10	700	**199 130 725**	2.300
1 ¼	32	10	1000	**199 130 726**	2.600
1 ½	40	10	1600	**199 130 727**	3.000
2	50	10	3100	**199 130 728**	3.800

Rp [inch]	D [mm]	H [mm]	H1 [mm]	H2 [mm]	H3 [mm]	H5 [mm]	L [mm]	L1 [mm]	L2 [mm]	L4 [mm]	L5 [mm]	L6 [mm]	L7 [mm]	L8 [mm]	z [mm]
⅜	50	231	27	64	94	167	92	180	56	25	97	83	122	66	64
½	50	231	27	64	94	167	95	180	56	25	97	83	122	66	64
¾	58	240	30	73	94	167	110	180	65	25	97	83	122	66	72
1	68	240	36	73	94	167	123	180	71	25	97	83	122	66	79
1 ¼	84	251	44	84	94	167	146	180	85	45	97	83	122	66	94
1 ½	97	251	51	84	94	167	157	180	89	45	97	83	122	66	95
2	124	273	64	106	94	167	183	180	101	45	97	83	122	66	107

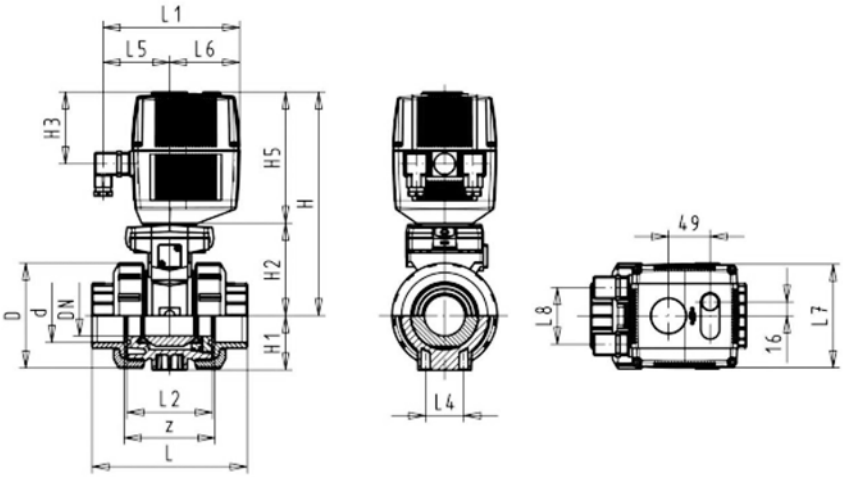

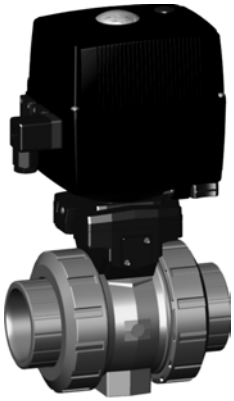

DN10/15 - 50

Ball valve type 130 ABS 24V
With manual emergency override
With threaded sockets Rp

Model:

- Assignment of actuators EA21 (DN10/15-50), EA31 (DN65-100 if available)
- Image and drawing DN65-100 please see **New product ball valve DN65-100**
- For easy installation and removal
- Integrated stainless steel mounting inserts
- Voltage 24 V AC/DC
- Control range 90°<)
- Control time: EA21: 5s/90°<), EA31: 15s/90°<)

Option:

- Individual configuration of the valve (see form)

Rp [inch]	DN [mm]	PN	kv-value (Δp=1 bar) [l/min]	EPDM Code	kg
⅜	10	10	70	**199 130 762**	2.100
½	15	10	185	**199 130 763**	2.100
¾	20	10	350	**199 130 764**	2.200
1	25	10	700	**199 130 765**	2.300
1 ¼	32	10	1000	**199 130 766**	2.600
1 ½	40	10	1600	**199 130 767**	3.000
2	50	10	3100	**199 130 768**	3.800

Rp [inch]	D [mm]	H [mm]	H1 [mm]	H2 [mm]	H3 [mm]	H5 [mm]	L [mm]	L1 [mm]	L2 [mm]	L4 [mm]	L5 [mm]	L6 [mm]	L7 [mm]	L8 [mm]	z [mm]
⅜	50	231	27	64	94	167	92	180	56	25	97	83	122	66	64
½	50	231	27	64	94	167	95	180	56	25	97	83	122	66	64
¾	58	240	30	73	94	167	110	180	65	25	97	83	122	66	72
1	68	240	36	73	94	167	123	180	71	25	97	83	122	66	79
1 ¼	84	251	44	84	94	167	146	180	85	45	97	83	122	66	94
1 ½	97	251	51	84	94	167	157	180	89	45	97	83	122	66	95
2	124	273	64	106	94	167	183	180	101	45	97	83	122	66	107

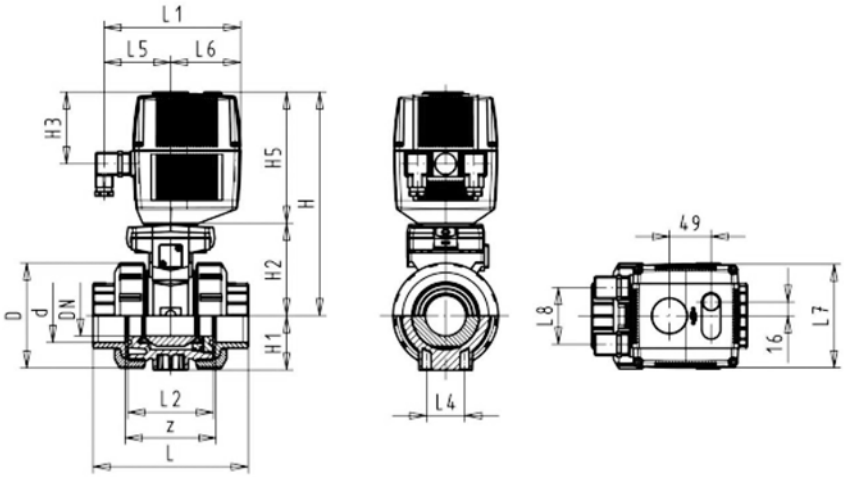

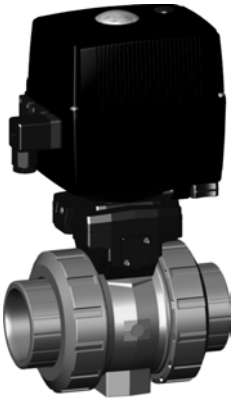

DN10/15 - 50

Ball valve type 134 ABS 100-230V
With manual emergency override
With solvent cement sockets Inch BS

Model:

- Assignment of actuators EA21 (DN10/15-50), EA31 (DN65-100 if available)
- Image and drawing DN65-100 please see **New product ball valve DN65-100**
- For easy installation and removal
- Integrated stainless steel mounting inserts
- Voltage 100-230 V, 50-60 Hz
- Control range 90°<)
- Control time: EA21: 5s/90°<), EA31: 15s/90°<)

Option:

- Individual configuration of the valve (see form)

Inch	DN [mm]	PN	kv-value (Δp=1 bar) [l/min]	EPDM Code	kg
⅜	10	10	70	**199 134 782**	2.100
½	15	10	185	**199 134 783**	2.100
¾	20	10	350	**199 134 784**	2.200
1	25	10	700	**199 134 785**	2.300
1 ¼	32	10	1000	**199 134 786**	2.600
1 ½	40	10	1600	**199 134 787**	3.000
2	50	10	3100	**199 134 788**	3.800
New 2 ½	65	10	5000	**199 134 789**	3.500
New 3	80	10	7000	**199 134 790**	4.300
New 4	100	10	11000	**199 134 791**	5.300

Inch	D [mm]	H [mm]	H1 [mm]	H2 [mm]	H3 [mm]	H5 [mm]	L [mm]	L1 [mm]	L2 [mm]	L4 [mm]	L5 [mm]	L6 [mm]	L7 [mm]	z [mm]
⅜	50	231	27	64	94	167	92	180	56	25	97	83	122	60
½	50	231	27	64	94	167	95	180	56	25	97	83	122	60
¾	58	240	30	73	94	167	110	180	65	25	97	83	122	69
1	68	240	36	73	94	167	123	180	71	25	97	83	122	75
1 ¼	84	251	44	84	94	167	146	180	85	45	97	83	122	89
1 ½	97	251	51	84	94	167	157	180	89	45	97	83	122	97
2	124	273	64	106	94	167	183	180	101	45	97	83	122	110
New 2 ½	166	346	85	156	94	190	233	180	136	70	98	83	122	144
New 3	200	358	105	168	94	190	254	180	141	70	98	83	122	151
New 4	238	365	123	175	94	190	301	180	164	120	98	83	122	174

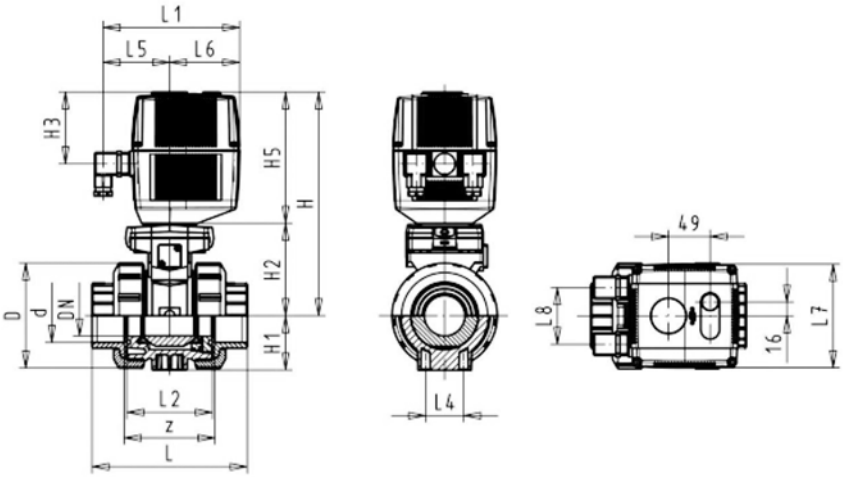

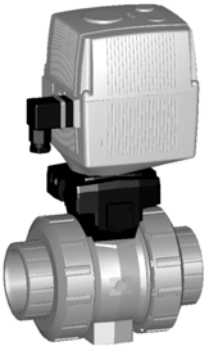

DN10/15 - 50

Ball valve type 134 ABS 24V
With manual emergency override
With solvent cement sockets Inch BS

Model:

- Assignment of actuators EA21 (DN10/15-50), EA31 (DN65-100 if available)
- Image and drawing DN65-100 please see **New product ball valve DN65-100**
- For easy installation and removal
- Integrated stainless steel mounting inserts
- Voltage 24 V AC/DC
- Control range 90°<)
- Control time: EA21: 5s/90°<), EA31: 15s/90°<)

Option:

- Individual configuration of the valve (see form)

Inch	DN [mm]	PN	kv-value (Δp=1 bar) [l/min]	EPDM Code	kg
⅜	10	10	70	**199 134 822**	2.100
½	15	10	185	**199 134 823**	2.100
¾	20	10	350	**199 134 824**	2.200
1	25	10	700	**199 134 825**	2.300
1 ¼	32	10	1000	**199 134 826**	2.600
1 ½	40	10	1600	**199 134 827**	3.000
2	50	10	3100	**199 134 828**	3.800
New 2 ½	65	10	5000	**199 134 829**	3.500
New 3	80	10	7000	**199 134 830**	4.300
New 4	100	10	11000	**199 134 831**	5.300

Inch	D [mm]	H [mm]	H1 [mm]	H2 [mm]	H3 [mm]	H5 [mm]	L [mm]	L1 [mm]	L2 [mm]	L4 [mm]	L5 [mm]	L6 [mm]	L7 [mm]	z [mm]
⅜	50	231	27	64	94	167	92	180	56	25	97	83	122	60
½	50	231	27	64	94	167	95	180	56	25	97	83	122	60
¾	58	240	30	73	94	167	110	180	65	25	97	83	122	69
1	68	240	36	73	94	167	123	180	71	25	97	83	122	75
1 ¼	84	251	44	84	94	167	146	180	85	45	97	83	122	89
1 ½	97	251	51	84	94	167	157	180	89	45	97	83	122	97
2	124	273	64	106	94	167	183	180	101	45	97	83	122	110
New 2 ½	166	346	85	156	94	190	233	180	136	70	98	83	122	144
New 3	200	358	105	168	94	190	254	180	141	70	98	83	122	151
New 4	238	365	123	175	94	190	301	180	164	120	98	83	122	174

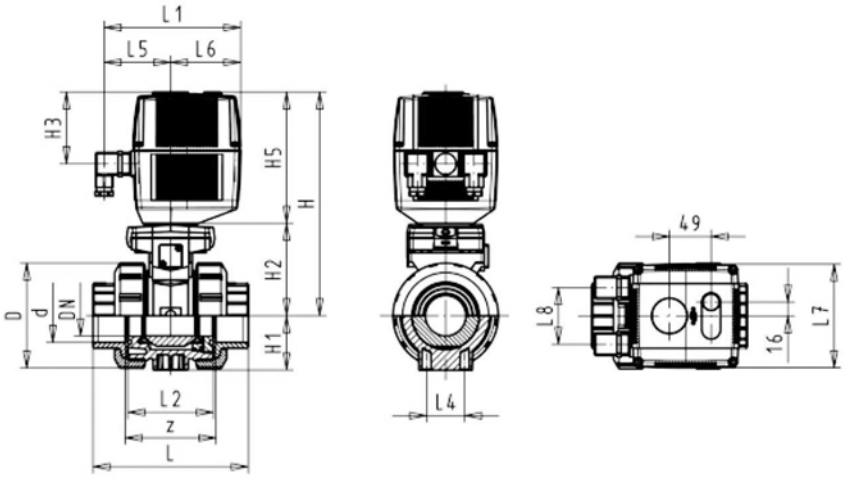

Copiable
Configurator GF ball valve type 546 ABS

You will find a large selection of different versions in our range of products. New system elements also provide you with new opportunities for use. In order for us to supply exactly the ball valve you need for you application, we have created a selection menu for you.
We supply what you put together.

Ball Valve
A01 Ball Valve 546

Material
B03 ABS

Nominal width
C05 DN 10 3/8"
C06 DN 15 1/2"
C07 DN 20 3/4"
C08 DN 25 1"
C09 DN 32 1 1/4"
C10 DN 40 1 1/2"
C11 DN 50 2"
C12 DN 65 2 1/2"
C13 DN 80 3"
C14 DN 100 4"

Version
D01 Standard, PTFE ball seal
D04 silicon-free, PVDF ball seal metric (only with specific connecting parts)

Seals
E01 EPDM Seals
E02 FPM Seals

Threaded inserts
F01 without threaded inserts
F02 with threaded inserts

Connecting parts
G20 ABS Cement socket metric
G21 ABS Cement socket inch BS
G22 ABS Threaded socket Rp
G23 ABS Threaded socket Rp reinforced
G40 PE-100 Fusion socket metric
G41 PE-100 Butt fusion spigot SDR11 metric
G42 PE-100 Butt fusion spigot SDR17.6 metric
G43 PE-100 Butt fusion spigot long SDR11 metric
G44 PE-100 Butt fusion spigot long SDR17.6 metric (DN65-100)
G83 ABS Valve end blank

Multi-functional module
I01 No multi-functional module
I02 Empty module
I03 Module with 2 end switches Ag, Ni
I04 Module with 2 end switches Au
I05 Module with 2 inductive switches Namur
I06 Module with 2 inductive switches PNP
I07 Module with 2 inductive switches NPN

Lever
K01 Standard lever red
K02 Standard lever black
K11 Multi-functional lever red

Mounting plate
L01 without mounting plate
L02 with mounting plate

A01	B03	C	D	E	F	G	G	I	K	L
						left	right			

Copiable
GF ball valve type 546 with electric Actuator

It's easy to actuate the type 546:
With the configurator, you have a choice of new electric actuators, the EA11 for standard applications and the EA21 with modular design and accessories, for practically and type of operation.

We supply what you put together.

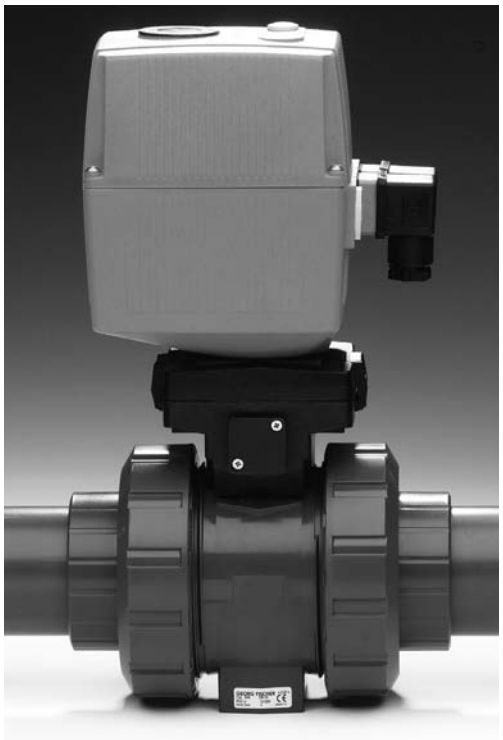

Electric Actuator EA11
T01 EA11 24 V
T02 EA11 100–230 V

Accessories EA11
U01 No accessories
U02 2 limit switches Ag, Ni
U03 Heating element
U04 Fail-safe return
U05 2 limit switches Ag, Ni normally open

Electric Actuator EA21/31
T03 EA21/31 24 V
T04 EA21/31 100–230 V

Accessories EA21
W01 No accessories
W02 Heating element
W03 Cycle time module
W04 Cycle time monitoring
W05 Cycles monitoring
W06 Motor current monitoring
W07 2 limit switches Ag, Ni
W08 2 limit switches Gold
W09 2 limit switches NPN
W10 2 limit switches PNP
W11 Positioner
W12 Electric position indicator
W14 Fail-safe return unit
W15 Switch intermediate position
W27 2 limit switches Ag, Ni normally open with connector
W31 Positioner PE25 with galv. separation

T	U	T	W	W	W	W	W	W

Ball valves pneumatic

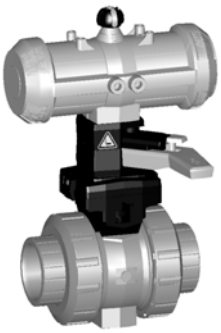

DN10/15 - 50

Ball valve type 230 ABS FC (Fail safe to close)
With manual override
With solvent cement sockets metric

Model:

- Built on with pneumatic actuator PA11/21
- Control time 90°<) 1-2 s
- For easy installation and removal
- Integrated stainless steel mounting inserts

Option:

- Individual configuration of the valve (see form)

d [mm]	DN [mm]	PN	kv-value (Δp=1 bar) [l/min]	EPDM Code	kg
16	10	10	70	**199 230 702**	1.459
20	15	10	185	**199 230 703**	1.459
25	20	10	350	**199 230 704**	1.576
32	25	10	700	**199 230 705**	1.700
40	32	10	1000	**199 230 706**	2.751
50	40	10	1600	**199 230 707**	3.073
63	50	10	3100	**199 230 708**	3.931

d [mm]	D [mm]	H [mm]	H1 [mm]	H2 [mm]	H3 [mm]	H4 [mm]	H5 [mm]	L [mm]	L1 [mm]	L2 [mm]	L4 [mm]	L5 [mm]	L6 [mm]	L7 [mm]	z [mm]
16	50	230	27	62	168	40	97	92	194	56	25	261	76	48	64
20	50	230	27	62	168	40	97	95	194	56	25	261	76	48	64
25	58	239	30	71	168	40	97	110	194	65	25	261	76	48	72
32	68	239	36	71	168	40	97	123	194	71	25	261	76	48	79
40	84	271	44	84	187	51	115	146	224	85	45	305	95	59	94
50	97	271	51	84	187	51	115	157	224	89	45	305	95	59	95
63	124	293	64	106	187	51	115	183	224	101	45	305	95	59	107

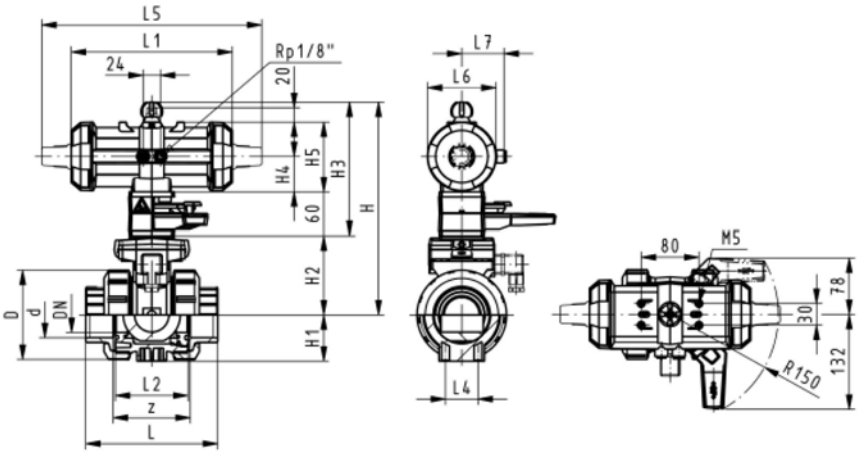

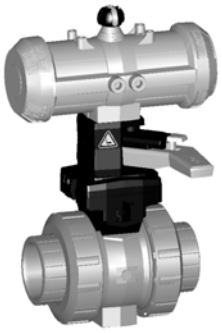

DN10/15 - 50

Ball valve type 230 ABS FO (Fail safe to open)
With manual override
With solvent cement sockets metric

Model:

- Built on with pneumatic actuator PA11/21
- Control time 90°<) 1-2 s
- For easy installation and removal
- Integrated stainless steel mounting inserts

Option:

- Individual configuration of the valve (see form)

d [mm]	DN [mm]	PN	kv-value (Δp=1 bar) [l/min]	EPDM Code	kg
16	10	10	70	**199 230 742**	1.459
20	15	10	185	**199 230 743**	1.459
25	20	10	350	**199 230 744**	1.576
32	25	10	700	**199 230 745**	1.700
40	32	10	1000	**199 230 746**	2.751
50	40	10	1600	**199 230 747**	3.073
63	50	10	3100	**199 230 748**	3.931

d [mm]	D [mm]	H [mm]	H1 [mm]	H2 [mm]	H3 [mm]	H4 [mm]	H5 [mm]	L [mm]	L1 [mm]	L2 [mm]	L4 [mm]	L5 [mm]	L6 [mm]	L7 [mm]	z [mm]
16	50	230	27	62	168	40	97	92	194	56	25	261	76	48	64
20	50	230	27	62	168	40	97	95	194	56	25	261	76	48	64
25	58	239	30	71	168	40	97	110	194	65	25	261	76	48	72
32	68	239	36	71	168	40	97	123	194	71	25	261	76	48	79
40	84	271	44	84	187	51	115	146	224	85	45	305	95	59	94
50	97	271	51	84	187	51	115	157	224	89	45	305	95	59	95
63	124	293	64	106	187	51	115	183	224	101	45	305	95	59	107

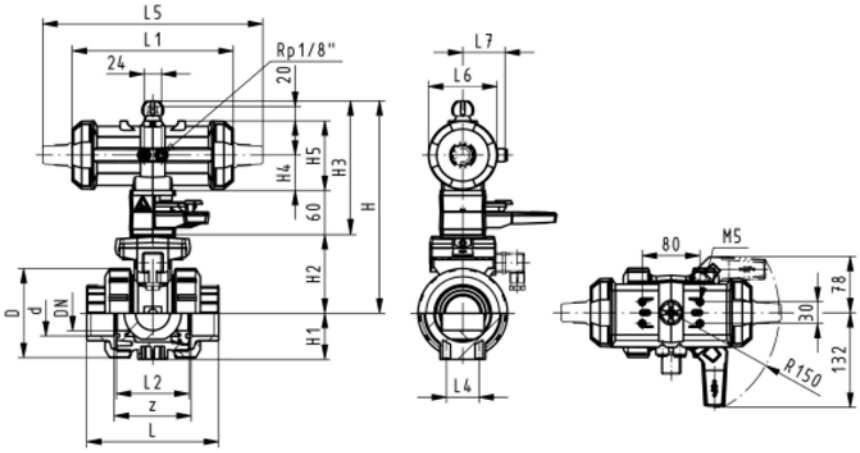

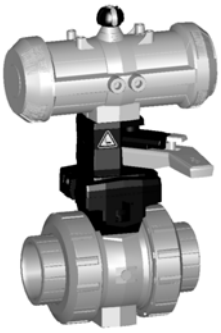

DN10/15 - 50

Ball valve type 230 ABS DA (Double acting)
With manual override
With solvent cement sockets metric

Model:

- Built on with pneumatic actuator PA11/21
- Control time 90°<) 1-2 s
- For easy installation and removal
- Integrated stainless steel mounting inserts

Option:

- Individual configuration of the valve (see form)

d [mm]	DN [mm]	PN	kv-value (Δp=1 bar) [l/min]	EPDM Code	kg
16	10	10	70	**199 230 782**	1.459
20	15	10	185	**199 230 783**	1.459
25	20	10	350	**199 230 784**	1.576
32	25	10	700	**199 230 785**	1.700
40	32	10	1000	**199 230 786**	2.751
50	40	10	1600	**199 230 787**	3.073
63	50	10	3100	**199 230 788**	3.931

d [mm]	D [mm]	H [mm]	H1 [mm]	H2 [mm]	H3 [mm]	H4 [mm]	H5 [mm]	L [mm]	L1 [mm]	L2 [mm]	L4 [mm]	L5 [mm]	L6 [mm]	L7 [mm]	z [mm]
16	50	230	27	62	168	40	97	92	194	56	25	261	76	48	64
20	50	230	27	62	168	40	97	95	194	56	25	261	76	48	64
25	58	239	30	71	168	40	97	110	194	65	25	261	76	48	72
32	68	239	36	71	168	40	97	123	194	71	25	261	76	48	79
40	84	271	44	84	187	51	115	146	224	85	45	305	95	59	94
50	97	271	51	84	187	51	115	157	224	89	45	305	95	59	95
63	124	293	64	106	187	51	115	183	224	101	45	305	95	59	107

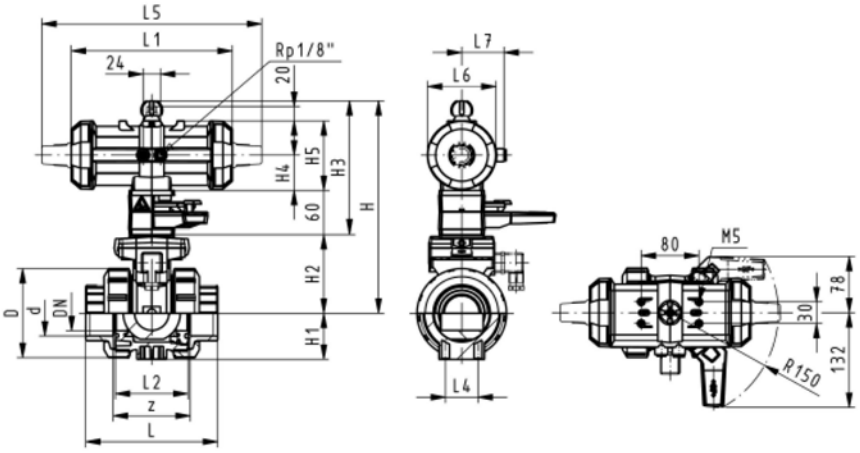

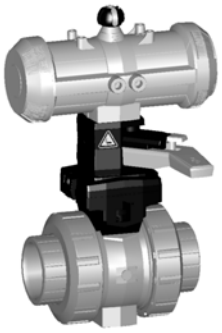

DN10/15 - 50

Ball valve type 230 ABS FC (Fail safe to close)
With manual override
With threaded sockets Rp

Model:

- Built on with pneumatic actuator PA11/21
- Control time 90°<) 1-2 s
- For easy installation and removal
- Integrated stainless steel mounting inserts

Option:

- Individual configuration of the valve (see form)

Rp [inch]	DN [mm]	PN	kv-value (Δp=1 bar) [l/min]	EPDM Code	kg
⅜	10	10	70	**199 230 722**	1.459
½	15	10	185	**199 230 723**	1.459
¾	20	10	350	**199 230 724**	1.576
1	25	10	700	**199 230 725**	1.700
1 ¼	32	10	1000	**199 230 726**	2.751
1 ½	40	10	1600	**199 230 727**	3.073
2	50	10	3100	**199 230 728**	3.931

Rp [inch]	D [mm]	H [mm]	H1 [mm]	H2 [mm]	H3 [mm]	H4 [mm]	H5 [mm]	L [mm]	L1 [mm]	L2 [mm]	L4 [mm]	L5 [mm]	L6 [mm]	L7 [mm]	z [mm]
⅜	50	230	27	62	168	40	97	92	194	56	25	261	76	48	64
½	50	230	27	62	168	40	97	95	194	56	25	261	76	48	64
¾	58	239	30	71	168	40	97	110	194	65	25	261	76	48	72
1	68	239	36	71	168	40	97	123	194	71	25	261	76	48	79
1 ¼	84	271	44	84	187	51	115	146	224	85	45	305	95	59	94
1 ½	97	271	51	84	187	51	115	157	224	89	45	305	95	59	95
2	124	293	64	106	187	51	115	183	224	101	45	305	95	59	107

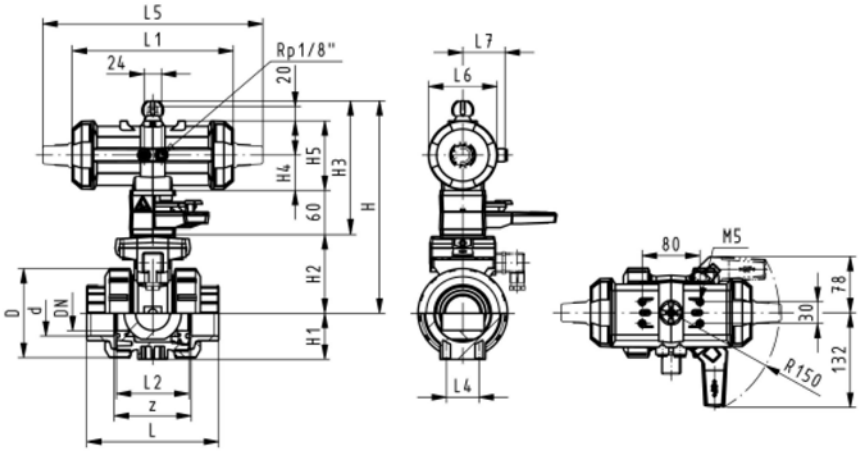

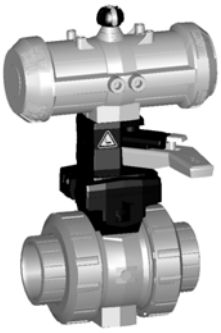

DN10/15 - 50

Ball valve type 230 ABS FO (Fail safe to open)
With manual override
With threaded sockets Rp

Model:

- Built on with pneumatic actuator PA11/21
- Control time 90°<) 1-2 s
- For easy installation and removal
- Integrated stainless steel mounting inserts

Option:

- Individual configuration of the valve (see form)

Rp [inch]	DN [mm]	PN	kv-value (Δp=1 bar) [l/min]	EPDM Code	kg
⅜	10	10	70	**199 230 762**	1.459
½	15	10	185	**199 230 763**	1.459
¾	20	10	350	**199 230 764**	1.576
1	25	10	700	**199 230 765**	1.700
1 ¼	32	10	1000	**199 230 766**	2.751
1 ½	40	10	1600	**199 230 767**	3.073
2	50	10	3100	**199 230 768**	3.931

Rp [inch]	D [mm]	H [mm]	H1 [mm]	H2 [mm]	H3 [mm]	H4 [mm]	H5 [mm]	L [mm]	L1 [mm]	L2 [mm]	L4 [mm]	L5 [mm]	L6 [mm]	L7 [mm]	z [mm]
⅜	50	230	27	62	168	40	97	92	194	56	25	261	76	48	64
½	50	230	27	62	168	40	97	95	194	56	25	261	76	48	64
¾	58	239	30	71	168	40	97	110	194	65	25	261	76	48	72
1	68	239	36	71	168	40	97	123	194	71	25	261	76	48	79
1 ¼	84	271	44	84	187	51	115	146	224	85	45	305	95	59	94
1 ½	97	271	51	84	187	51	115	157	224	89	45	305	95	59	95
2	124	293	64	106	187	51	115	183	224	101	45	305	95	59	107

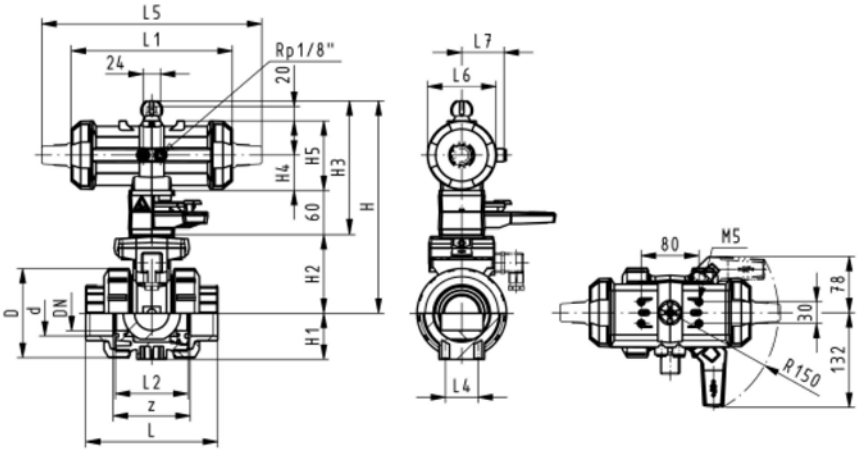

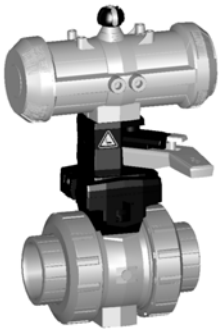

DN10/15 - 50

Ball valve type 230 ABS DA (Double acting)
With manual override
With threaded sockets Rp

Model:

- Built on with pneumatic actuator PA11/21
- Control time 90°<) 1-2 s
- For easy installation and removal
- Integrated stainless steel mounting inserts

Option:

- Individual configuration of the valve (see form)

Rp [inch]	DN [mm]	PN	kv-value (Δp=1 bar) [l/min]	EPDM Code	kg
⅜	10	10	70	**199 230 802**	1.459
½	15	10	185	**199 230 803**	1.459
¾	20	10	350	**199 230 804**	1.576
1	25	10	700	**199 230 805**	1.700
1 ¼	32	10	1000	**199 230 806**	2.751
1 ½	40	10	1600	**199 230 807**	3.073
2	50	10	3100	**199 230 808**	3.931

Rp [inch]	D [mm]	H [mm]	H1 [mm]	H2 [mm]	H3 [mm]	H4 [mm]	H5 [mm]	L [mm]	L1 [mm]	L2 [mm]	L4 [mm]	L5 [mm]	L6 [mm]	L7 [mm]	z [mm]
⅜	50	230	27	62	168	40	97	92	194	56	25	261	76	48	64
½	50	230	27	62	168	40	97	95	194	56	25	261	76	48	64
¾	58	239	30	71	168	40	97	110	194	65	25	261	76	48	72
1	68	239	36	71	168	40	97	123	194	71	25	261	76	48	79
1 ¼	84	271	44	84	187	51	115	146	224	85	45	305	95	59	94
1 ½	97	271	51	84	187	51	115	157	224	89	45	305	95	59	95
2	124	293	64	106	187	51	115	183	224	101	45	305	95	59	107

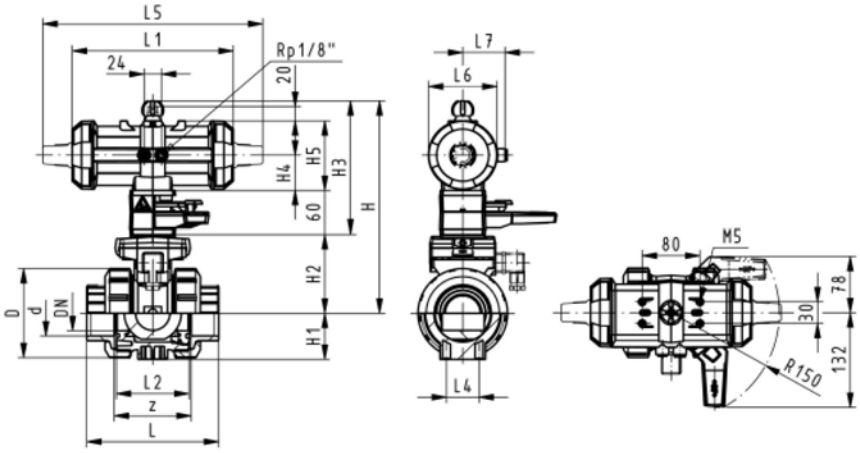

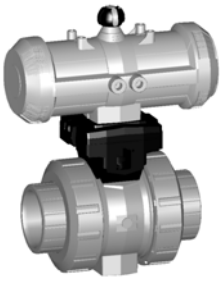

DN10/15 - 50

Ball valve type 230 ABS FC (Fail safe to close)
Without manual override
With solvent cement sockets metric

Model:

- Assignment of actuators PA11 (DN10/15-25), PA21 (DN32-50), PA30 (DN65), PA35 (DN80), PA40 (DN100)
- Image and drawing DN65-100 please see **New product ball valve DN65-100**
- For easy installation and removal
- Integrated stainless steel mounting inserts
- Control time 90°<) 1-2 s

Option:

- Individual configuration of the valve (see form)

d [mm]	DN [mm]	PN	kv-value (Δp=1 bar) [l/min]	EPDM Code	kg
16	10	10	70	**199 230 822**	1.459
20	15	10	185	**199 230 823**	1.459
25	20	10	350	**199 230 824**	1.576
32	25	10	700	**199 230 825**	1.700
40	32	10	1000	**199 230 826**	2.751
50	40	10	1600	**199 230 827**	3.073
63	50	10	3100	**199 230 828**	3.931
New 75	65	10	5000	**199 230 829**	3.900
New 90	80	10	7000	**199 230 830**	4.700
New 110	100	10	11000	**199 230 831**	6.800

d [mm]	D [mm]	H [mm]	H1 [mm]	H2 [mm]	H4 [mm]	H5 [mm]	L [mm]	L1 [mm]	L2 [mm]	L4 [mm]	L5 [mm]	L6 [mm]	L7 [mm]	z [mm]
16	50	167	27	62	40	97	92	194	56	25	261	76	48	64
20	50	167	27	62	40	97	95	194	56	25	261	76	48	64
25	58	176	30	71	40	97	110	194	65	25	261	76	48	72
32	68	176	36	71	40	97	123	194	71	25	261	76	48	79
40	84	210	44	84	51	115	146	224	85	45	305	95	59	94
50	97	210	51	84	51	115	157	224	89	45	305	95	59	95
63	124	232	64	106	51	115	183	224	101	45	305	95	59	107
New 75	166	262	85	156		70	233	218	136	70	276	65		144
New 90	200	281	105	168		78	254	259	141	70	341	72		151
New 110	238	292	123	175		86	301	287	164	120	369	80		174

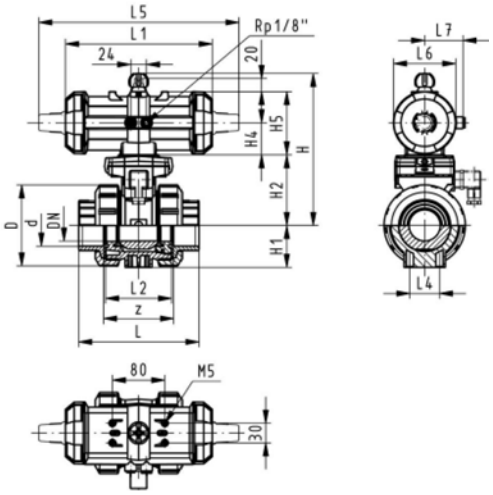

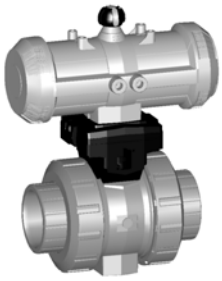

DN10/15 - 50

Ball valve type 230 ABS FO (Fail safe to open)
Without manual override
With solvent cement sockets metric

Model:

- Assignment of actuators PA11 (DN10/15-25), PA21 (DN32-50), PA30 (DN65), PA35 (DN80), PA40 (DN100)
- Image and drawing DN65-100 please see **New product ball valve DN65-100**
- For easy installation and removal
- Integrated stainless steel mounting inserts
- Control time 90°<) 1-2 s

Option:

- Individual configuration of the valve (see form)

d [mm]	DN [mm]	PN	kv-value (Δp=1 bar) [l/min]	EPDM Code	kg
16	10	10	70	**199 230 862**	1.459
20	15	10	185	**199 230 863**	1.459
25	20	10	350	**199 230 864**	1.576
32	25	10	700	**199 230 865**	1.700
40	32	10	1000	**199 230 866**	2.751
50	40	10	1600	**199 230 867**	3.073
63	50	10	3100	**199 230 868**	3.931
New 75	65	10	5000	**199 230 869**	3.900
New 90	80	10	7000	**199 230 870**	4.700
New 110	100	10	11000	**199 230 871**	6.800

d [mm]	D [mm]	H [mm]	H1 [mm]	H2 [mm]	H4 [mm]	H5 [mm]	L [mm]	L1 [mm]	L2 [mm]	L4 [mm]	L5 [mm]	L6 [mm]	L7 [mm]	z [mm]
16	50	167	27	62	40	97	92	194	56	25	261	76	48	64
20	50	167	27	62	40	97	95	194	56	25	261	76	48	64
25	58	176	30	71	40	97	110	194	65	25	261	76	48	72
32	68	176	36	71	40	97	123	194	71	25	261	76	48	79
40	84	210	44	84	51	115	146	224	85	45	305	95	59	94
50	97	210	51	84	51	115	157	224	89	45	305	95	59	95
63	124	232	64	106	51	115	183	224	101	45	305	95	59	107
New 75	166	262	85	156		70	233	218	136	70	276	65		144
New 90	200	281	105	168		78	254	259	141	70	341	72		151
New 110	238	292	123	175		86	301	287	164	120	369	80		174

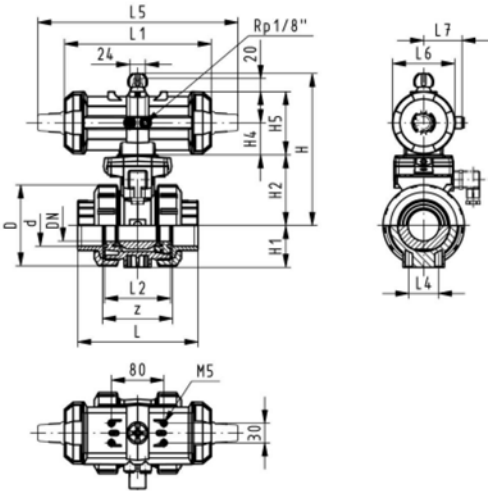

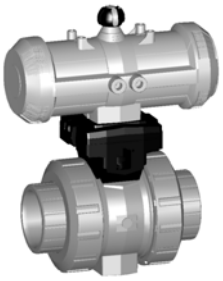

DN10/15 - 50

Ball valve type 230 ABS DA (Double acting)
Without manual override
With solvent cement sockets metric

Model:

- Assignment of actuators: PA11 (DN10/15-25), PA21 (DN32-50), PA35 (DN65), PA40 (DN80), PA45 (DN100)
- Image and drawing DN65-100 please see **New product ball valve DN65-100**
- For easy installation and removal
- Integrated stainless steel mounting inserts
- Control time 90°<) 1-2 s

Option:

- Individual configuration of the valve (see form)

d [mm]	DN [mm]	PN	kv-value (Δp=1 bar) [l/min]	EPDM Code	kg
16	10	10	70	**199 230 902**	1.459
20	15	10	185	**199 230 903**	1.459
25	20	10	350	**199 230 904**	1.576
32	25	10	700	**199 230 905**	1.700
40	32	10	1000	**199 230 906**	2.751
50	40	10	1600	**199 230 907**	3.073
63	50	10	3100	**199 230 908**	3.931
New 75	65	10	5000	**199 230 909**	2.800
New 90	80	10	7000	**199 230 910**	4.000
New 110	100	10	11000	**199 230 911**	5.000

d [mm]	D [mm]	H [mm]	H1 [mm]	H2 [mm]	H4 [mm]	H5 [mm]	L [mm]	L1 [mm]	L2 [mm]	L4 [mm]	L5 [mm]	L6 [mm]	L7 [mm]	z [mm]
16	50	167	27	62	40	97	92	194	56	25	261	76	48	64
20	50	167	27	62	40	97	95	194	56	25	261	76	48	64
25	58	176	30	71	40	97	110	194	65	25	261	76	48	72
32	68	176	36	71	40	97	123	194	71	25	261	76	48	79
40	84	210	44	84	51	115	146	224	85	45	305	95	59	94
50	97	210	51	84	51	115	157	224	89	45	305	95	59	95
63	124	232	64	106	51	115	183	224	101	45	305	95	59	107
New 75	166	257	85	156		66	233	144	136	70	190	60		144
New 90	200	274	105	168		70	254	152	141	70	198	65		151
New 110	238	273	123	175		78	301	169	164	120	235	72		174

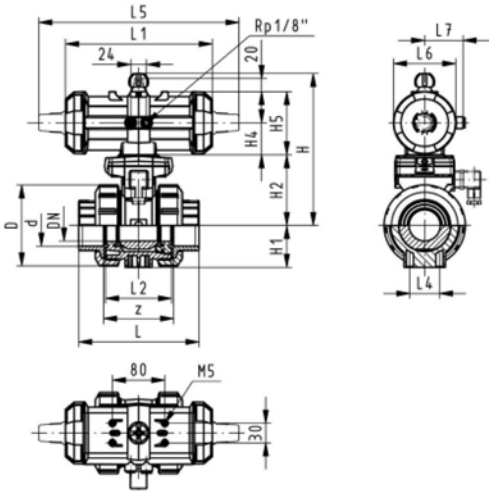

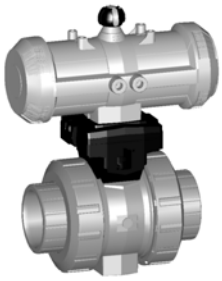

DN10/15 - 50

Ball valve type 230 ABS FC (Fail safe to close)
Without manual override
With threaded sockets Rp

Model:

- Assignment of actuators PA11 (DN10/15-25), PA21 (DN32-50), PA30 (DN65), PA35 (DN80), PA40 (DN100)
- Image and drawing DN65-100 please see **New product ball valve DN65-100**
- For easy installation and removal
- Integrated stainless steel mounting inserts
- Control time 90°<) 1-2 s

Option:

- Individual configuration of the valve (see form)

Rp [inch]	DN [mm]	PN	kv-value (Δp=1 bar) [l/min]	EPDM Code	kg
⅜	10	10	70	**199 230 842**	1.200
½	15	10	185	**199 230 843**	1.200
¾	20	10	350	**199 230 844**	1.300
1	25	10	700	**199 230 845**	1.400
1 ¼	32	10	1000	**199 230 846**	2.500
1 ½	40	10	1600	**199 230 847**	2.800
2	50	10	3100	**199 230 848**	3.700

Rp [inch]	D [mm]	H [mm]	H1 [mm]	H2 [mm]	H4 [mm]	H5 [mm]	L [mm]	L1 [mm]	L2 [mm]	L4 [mm]	L5 [mm]	L6 [mm]	L7 [mm]	z [mm]
⅜	50	167	27	62	40	97	92	194	56	25	261	76	48	64
½	50	167	27	62	40	97	95	194	56	25	261	76	48	64
¾	58	176	30	71	40	97	110	194	65	25	261	76	48	72
1	68	176	36	71	40	97	123	194	71	25	261	76	48	79
1 ¼	84	210	44	84	51	115	146	224	85	45	305	95	59	94
1 ½	97	210	51	84	51	115	157	224	89	45	305	95	59	95
2	124	232	64	106	51	115	183	224	101	45	305	95	59	107

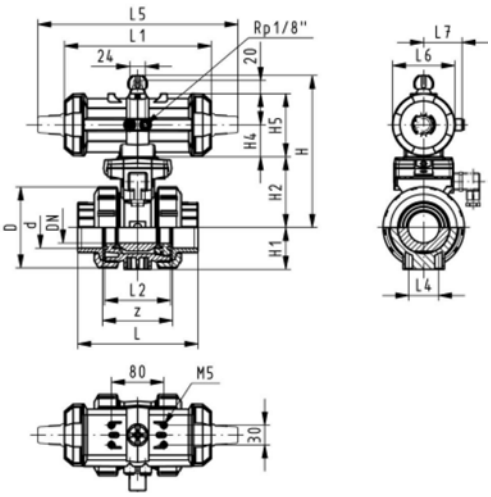

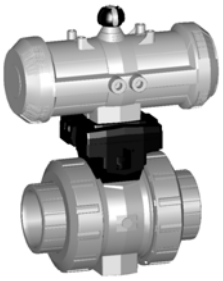

DN10/15 - 50

Ball valve type 230 ABS FO (Fail safe to open)
Without manual override
With threaded sockets Rp

Model:

- Assignment of actuators PA11 (DN10/15-25), PA21 (DN32-50), PA30 (DN65), PA35 (DN80), PA40 (DN100)
- Image and drawing DN65-100 please see **New product ball valve DN65-100**
- For easy installation and removal
- Integrated stainless steel mounting inserts
- Control time 90°<) 1-2 s

Option:

- Individual configuration of the valve (see form)

Rp [inch]	DN [mm]	PN	kv-value (Δp=1 bar) [l/min]	EPDM Code	kg
⅜	10	10	70	**199 230 882**	1.200
½	15	10	185	**199 230 883**	1.200
¾	20	10	350	**199 230 884**	1.300
1	25	10	700	**199 230 885**	1.400
1 ¼	32	10	1000	**199 230 886**	2.500
1 ½	40	10	1600	**199 230 887**	2.800
2	50	10	3100	**199 230 888**	3.700

Rp [inch]	D [mm]	H [mm]	H1 [mm]	H2 [mm]	H4 [mm]	H5 [mm]	L [mm]	L1 [mm]	L2 [mm]	L4 [mm]	L5 [mm]	L6 [mm]	L7 [mm]	z [mm]
⅜	50	167	27	62	40	97	92	194	56	25	261	76	48	64
½	50	167	27	62	40	97	95	194	56	25	261	76	48	64
¾	58	176	30	71	40	97	110	194	65	25	261	76	48	72
1	68	176	36	71	40	97	123	194	71	25	261	76	48	79
1 ¼	84	210	44	84	51	115	146	224	85	45	305	95	59	94
1 ½	97	210	51	84	51	115	157	224	89	45	305	95	59	95
2	124	232	64	106	51	115	183	224	101	45	305	95	59	107

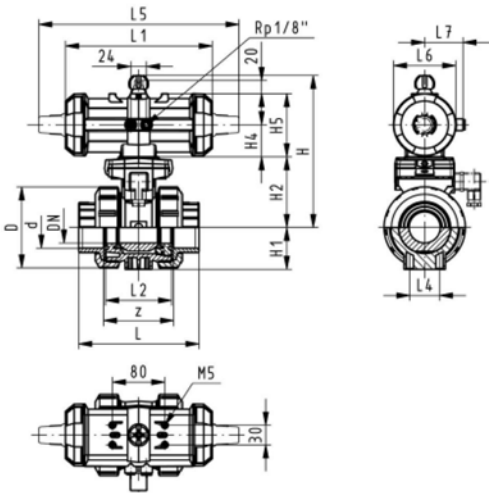

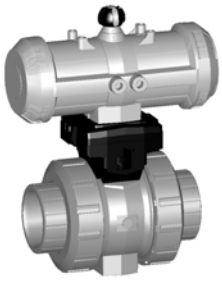

DN10/15 - 50

Ball valve type 230 ABS DA (Double acting)
Without manual override
With threaded sockets Rp

Model:

- Assignment of actuators: PA11 (DN10/15-25), PA21 (DN32-50), PA35 (DN65), PA40 (DN80), PA45 (DN100)
- Image and drawing DN65-100 please see **New product ball valve DN65-100**
- For easy installation and removal
- Integrated stainless steel mounting inserts
- Control time 90°<) 1-2 s

Option:

- Individual configuration of the valve (see form)

Rp [inch]	DN [mm]	PN	kv-value (Δp=1 bar) [l/min]	EPDM Code	kg
⅜	10	10	70	**199 230 922**	1.200
½	15	10	185	**199 230 923**	1.200
¾	20	10	350	**199 230 924**	1.300
1	25	10	700	**199 230 925**	1.400
1 ¼	32	10	1000	**199 230 926**	2.500
1 ½	40	10	1600	**199 230 927**	2.800
2	50	10	3100	**199 230 928**	3.700

Rp [inch]	D [mm]	H [mm]	H1 [mm]	H2 [mm]	H4 [mm]	H5 [mm]	L [mm]	L1 [mm]	L2 [mm]	L4 [mm]	L5 [mm]	L6 [mm]	L7 [mm]	z [mm]
⅜	50	167	27	62	40	97	92	194	56	25	261	76	48	64
½	50	167	27	62	40	97	95	194	56	25	261	76	48	64
¾	58	176	30	71	40	97	110	194	65	25	261	76	48	72
1	68	176	36	71	40	97	123	194	71	25	261	76	48	79
1 ¼	84	210	44	84	51	115	146	224	85	45	305	95	59	94
1 ½	97	210	51	84	51	115	157	224	89	45	305	95	59	95
2	124	232	64	106	51	115	183	224	101	45	305	95	59	107

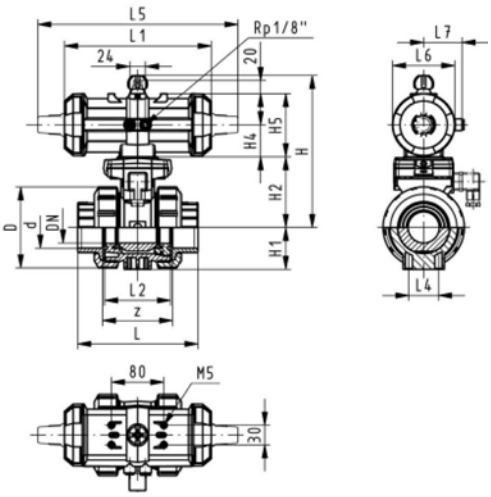

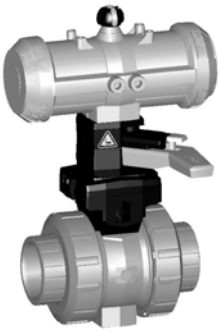

DN10/15 - 50

Ball valve type 234 ABS FC (Fail safe to close)
With manual override
With solvent cement sockets Inch BS

Model:

- Built on with pneumatic actuator PA11/21
- Control time 90°<) 1-2 s
- For easy installation and removal
- Integrated stainless steel mounting inserts

Option:

- Individual configuration of the valve (see form)

Inch	DN [mm]	PN	kv-value (Δp=1 bar) [l/min]	EPDM Code	kg
⅜	10	10	70	**199 234 702**	1.500
½	15	10	185	**199 234 703**	1.500
¾	20	10	350	**199 234 704**	1.600
1	25	10	700	**199 234 705**	1.700
1 ¼	32	10	1000	**199 234 706**	2.800
1 ½	40	10	1600	**199 234 707**	3.100
2	50	10	3100	**199 234 708**	4.000

Inch	D [mm]	H [mm]	H1 [mm]	H2 [mm]	H3 [mm]	H4 [mm]	H5 [mm]	L [mm]	L1 [mm]	L2 [mm]	L4 [mm]	L5 [mm]	L6 [mm]	L7 [mm]	z [mm]
⅜	50	230	27	62	168	40	97	92	194	56	25	261	76	48	60
½	50	230	27	62	168	40	97	95	194	56	25	261	76	48	60
¾	58	239	30	71	168	40	97	110	194	65	25	261	76	48	69
1	68	239	36	71	168	40	97	123	194	71	25	261	76	48	75
1 ¼	84	271	44	84	187	51	115	146	224	85	45	305	95	59	89
1 ½	97	271	51	84	187	51	115	157	224	89	45	305	95	59	97
2	124	293	64	106	187	51	115	183	224	101	45	305	95	59	110

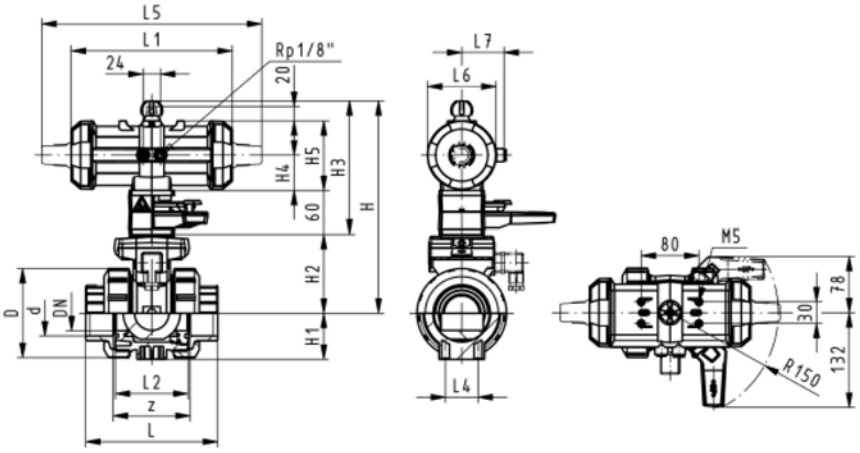

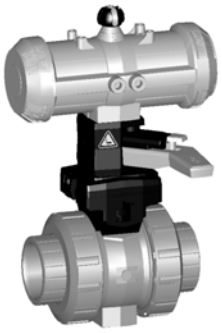

DN10/15 - 50

Ball valve type 234 ABS FO (Fail safe to open)
With manual override
With solvent cement sockets Inch BS

Model:

- Built on with pneumatic actuator PA11/21
- Control time 90°<) 1-2 s
- For easy installation and removal
- Integrated stainless steel mounting inserts

Option:

- Individual configuration of the valve (see form)

Inch	Inch	DN [mm]	PN	kv-value (Δp=1 bar) [l/min]	EPDM Code	kg
⅜	3/8	10	10	70	**199 234 742**	1.500
½	1/2	15	10	185	**199 234 743**	1.500
¾	3/4	20	10	350	**199 234 744**	1.600
1	1	25	10	700	**199 234 745**	1.700
1 ¼	11/4	32	10	1000	**199 234 746**	2.800
1 ½	11/2	40	10	1600	**199 234 747**	3.100
2	2	50	10	3100	**199 234 748**	4.000

Inch	D [mm]	H [mm]	H1 [mm]	H2 [mm]	H3 [mm]	H4 [mm]	H5 [mm]	L [mm]	L1 [mm]	L2 [mm]	L4 [mm]	L5 [mm]	L6 [mm]	L7 [mm]	z [mm]
⅜	50	230	27	62	168	40	97	92	194	56	25	261	76	48	60
½	50	230	27	62	168	40	97	95	194	56	25	261	76	48	60
¾	58	239	30	71	168	40	97	110	194	65	25	261	76	48	69
1	68	239	36	71	168	40	97	123	194	71	25	261	76	48	75
1 ¼	84	271	44	84	187	51	115	146	224	85	45	305	95	59	89
1 ½	97	271	51	84	187	51	115	157	224	89	45	305	95	59	97
2	124	293	64	106	187	51	115	183	224	101	45	305	95	59	110

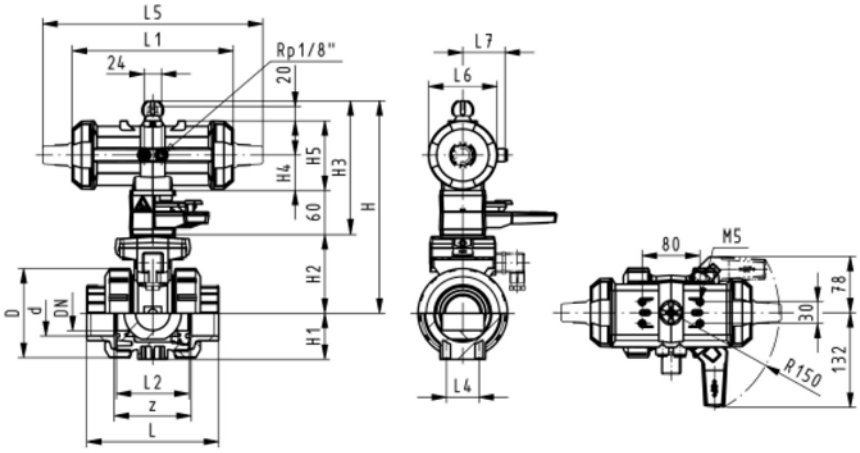

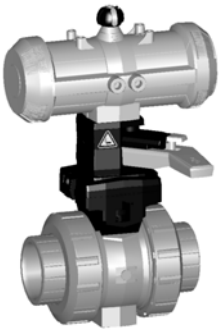

DN10/15 - 50

Ball valve type 234 ABS DA (Double acting)
With manual override
With solvent cement sockets Inch BS

Model:

- Built on with pneumatic actuator PA11/21
- Control time 90°<) 1-2 s
- For easy installation and removal
- Integrated stainless steel mounting inserts

Option:

- Individual configuration of the valve (see form)

Inch	DN [mm]	PN	kv-value (Δp=1 bar) [l/min]	EPDM Code	kg
⅜	10	10	70	**199 234 782**	1.500
½	15	10	185	**199 234 783**	1.500
¾	20	10	350	**199 234 784**	1.600
1	25	10	700	**199 234 785**	1.700
1 ¼	32	10	1000	**199 234 786**	2.800
1 ½	40	10	1600	**199 234 787**	3.100
2	50	10	3100	**199 234 788**	4.000

Inch	D [mm]	H [mm]	H1 [mm]	H2 [mm]	H3 [mm]	H4 [mm]	H5 [mm]	L [mm]	L1 [mm]	L2 [mm]	L4 [mm]	L5 [mm]	L6 [mm]	L7 [mm]	z [mm]
⅜	50	230	27	62	168	40	97	92	194	56	25	261	76	48	60
½	50	230	27	62	168	40	97	95	194	56	25	261	76	48	60
¾	58	239	30	71	168	40	97	110	194	65	25	261	76	48	69
1	68	239	36	71	168	40	97	123	194	71	25	261	76	48	75
1 ¼	84	271	44	84	187	51	115	146	224	85	45	305	95	59	89
1 ½	97	271	51	84	187	51	115	157	224	89	45	305	95	59	97
2	124	293	64	106	187	51	115	183	224	101	45	305	95	59	110

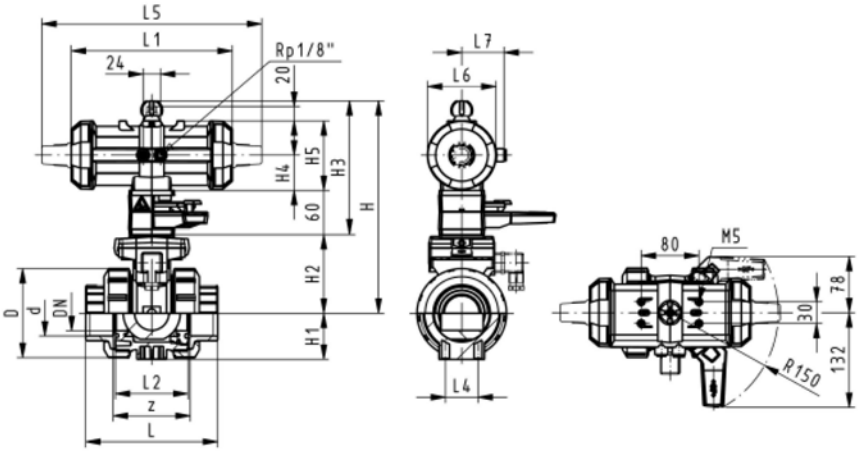

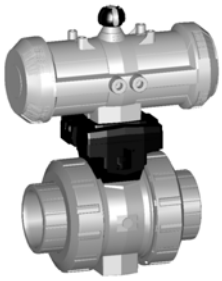

DN10/15 - 50

Ball valve type 234 ABS FC (Fail safe to close)
Without manual override
With solvent cement sockets Inch BS

Model:

- Assignment of actuators PA11 (DN10/15-25), PA21 (DN32-50), PA30 (DN65), PA35 (DN80), PA40 (DN100)
- Image and drawing DN65-100 please see **New product ball valve DN65-100**
- For easy installation and removal
- Integrated stainless steel mounting inserts
- Control time 90°<) 1-2 s

Option:

- Individual configuration of the valve (see form)

Inch	DN [mm]	PN	kv-value (Δp=1 bar) [l/min]	EPDM Code	kg
⅜	10	10	70	**199 234 822**	1.200
½	15	10	185	**199 234 823**	1.200
¾	20	10	350	**199 234 824**	1.300
1	25	10	700	**199 234 825**	1.400
1 ¼	32	10	1000	**199 234 826**	2.500
1 ½	40	10	1600	**199 234 827**	2.800
2	50	10	3100	**199 234 828**	3.700
New 2 ½	65	10	5000	**199 234 829**	3.900
New 3	80	10	7000	**199 234 830**	4.700
New 4	100	10	11000	**199 234 831**	6.700

Inch	D [mm]	H [mm]	H1 [mm]	H2 [mm]	H4 [mm]	H5 [mm]	L [mm]	L1 [mm]	L2 [mm]	L4 [mm]	L5 [mm]	L6 [mm]	L7 [mm]	z [mm]
⅜	50	167	27	62	40	97	92	194	56	25	261	76	48	60
½	50	167	27	62	40	97	95	194	56	25	261	76	48	60
¾	58	176	30	71	40	97	110	194	65	25	261	76	48	69
1	68	176	36	71	40	97	123	194	71	25	261	76	48	75
1 ¼	84	210	44	84	51	115	146	224	85	45	305	95	59	89
1 ½	97	210	51	84	51	115	157	224	89	45	305	95	59	97
2	124	232	64	106	51	115	183	224	101	45	305	95	59	110
New 2 ½	166	262	85	156		70	233	218	136	70	276	65		144
New 3	200	281	105	168		78	254	259	141	70	341	72		151
New 4	238	292	123	175		86	301	287	164	120	369	80		174

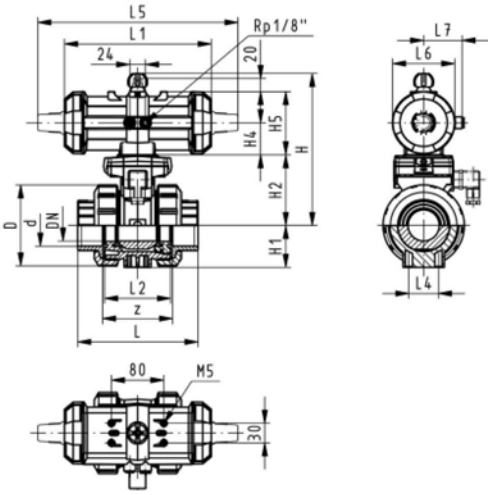

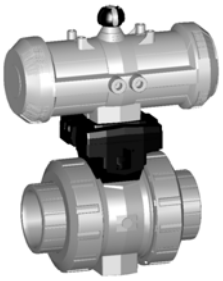

DN10/15 - 50

Ball valve type 234 ABS FO (Fail safe to open)
Without manual override
With solvent cement sockets Inch BS

Model:

- Assignment of actuators PA11 (DN10/15-25), PA21 (DN32-50), PA30 (DN65), PA35 (DN80), PA40 (DN100)
- Image and drawing DN65-100 please see **New product ball valve DN65-100**
- For easy installation and removal
- Integrated stainless steel mounting inserts
- Control time 90°<) 1-2 s

Option:

- Individual configuration of the valve (see form)

Inch	DN [mm]	PN	kv-value (Δp=1 bar) [l/min]	EPDM Code	kg
⅜	10	10	70	**199 234 862**	1.200
½	15	10	185	**199 234 863**	1.200
¾	20	10	350	**199 234 864**	1.300
1	25	10	700	**199 234 865**	1.400
1 ¼	32	10	1000	**199 234 866**	2.500
1 ½	40	10	1600	**199 234 867**	2.800
2	50	10	3100	**199 234 868**	3.700
New 2 ½	65	10	5000	**199 234 869**	3.900
New 3	80	10	7000	**199 234 870**	4.700
New 4	100	10	11000	**199 234 871**	6.700

Inch	D [mm]	H [mm]	H1 [mm]	H2 [mm]	H4 [mm]	H5 [mm]	L [mm]	L1 [mm]	L2 [mm]	L4 [mm]	L5 [mm]	L6 [mm]	L7 [mm]	z [mm]
⅜	50	167	27	62	40	97	92	194	56	25	261	76	48	60
½	50	167	27	62	40	97	95	194	56	25	261	76	48	60
¾	58	176	30	71	40	97	110	194	65	25	261	76	48	69
1	68	176	36	71	40	97	123	194	71	25	261	76	48	75
1 ¼	84	210	44	84	51	115	146	224	85	45	305	95	59	89
1 ½	97	210	51	84	51	115	157	224	89	45	305	95	59	97
2	124	232	64	106	51	115	183	224	101	45	305	95	59	110
New 2 ½	166	262	85	156		70	233	218	136	70	276	65		144
New 3	200	281	105	168		78	254	259	141	70	341	72		151
New 4	238	292	123	175		86	301	287	164	120	369	80		174

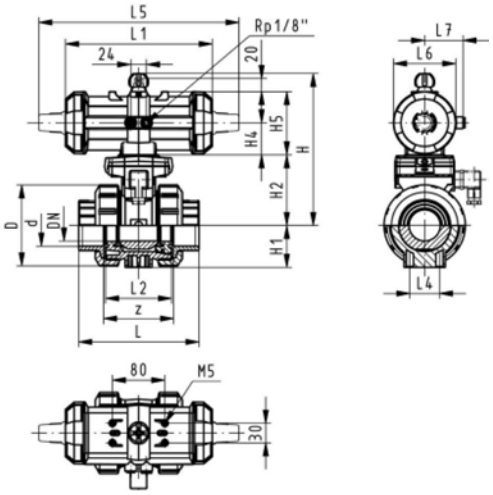

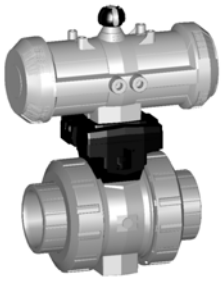

DN10/15 - 50

Ball valve type 234 ABS DA (Double acting)
Without manual override
With solvent cement sockets Inch BS

Model:

- Assignment of actuators: PA11 (DN10/15-25), PA21 (DN32-50), PA35 (DN65), PA40 (DN80), PA45 (DN100)
- Image and drawing DN65-100 please see **New product ball valve DN65-100**
- For easy installation and removal
- Integrated stainless steel mounting inserts
- Control time 90°<) 1-2 s

Option:

- Individual configuration of the valve (see form)

Inch	DN [mm]	PN	kv-value (Δp=1 bar) [l/min]	EPDM Code	kg
⅜	10	10	70	**199 234 902**	1.200
½	15	10	185	**199 234 903**	1.200
¾	20	10	350	**199 234 904**	1.300
1	25	10	700	**199 234 905**	1.400
1 ¼	32	10	1000	**199 234 906**	2.500
1 ½	40	10	1600	**199 234 907**	2.800
2	50	10	3100	**199 234 908**	3.700
New 2 ½	65	10	5000	**199 234 909**	2.800
New 3	80	10	7000	**199 234 910**	4.000
New 4	100	10	11000	**199 234 911**	4.900

Inch	D [mm]	H [mm]	H1 [mm]	H2 [mm]	H4 [mm]	H5 [mm]	L [mm]	L1 [mm]	L2 [mm]	L4 [mm]	L5 [mm]	L6 [mm]	L7 [mm]	z [mm]
⅜	50	167	27	62	40	97	92	194	56	25	261	76	48	60
½	50	167	27	62	40	97	95	194	56	25	261	76	48	60
¾	58	176	30	71	40	97	110	194	65	25	261	76	48	69
1	68	176	36	71	40	97	123	194	71	25	261	76	48	75
1 ¼	84	210	44	84	51	115	146	224	85	45	305	95	59	89
1 ½	97	210	51	84	51	115	157	224	89	45	305	95	59	97
2	124	232	64	106	51	115	183	224	101	45	305	95	59	110
New 2 ½	166	257	85	156		66	233	144	136	70	190	60		144
New 3	200	274	105	168		70	254	152	141	70	198	65		151
New 4	238	273	123	175		78	301	169	164	120	235	72		174

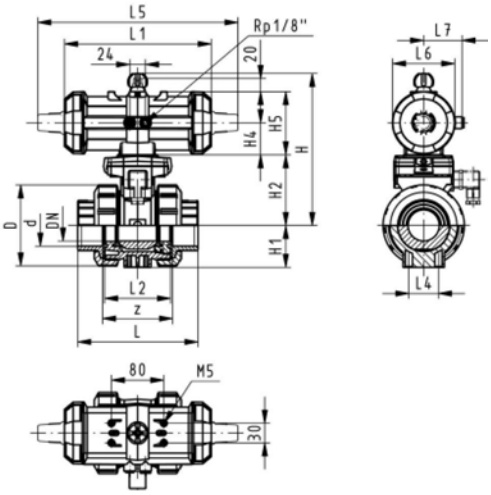

Copiable
Configurator GF ball valve type 546 ABS

You will find a large selection of different versions in our range of products. New system elements also provide you with new opportunities for use. In order for us to supply exactly the ball valve you need for you application, we have created a selection menu for you.
We supply what you put together.

Ball Valve
A01 Ball Valve 546

Material
B03 ABS

Nominal width
C05 DN 10 3/8"
C06 DN 15 1/2"
C07 DN 20 3/4"
C08 DN 25 1"
C09 DN 32 1 1/4"
C10 DN 40 1 1/2"
C11 DN 50 2"
C12 DN 65 2 1/2"
C13 DN 80 3"
C14 DN 100 4"

Version
D01 Standard, PTFE ball seal
D04 silicon-free, PVDF ball seal metric (only with specific connecting parts)

Seals
E01 EPDM Seals
E02 FPM Seals

Threaded inserts
F01 without threaded inserts
F02 with threaded inserts

Connecting parts
G20 ABS Cement socket metric
G21 ABS Cement socket inch BS
G22 ABS Threaded socket Rp
G23 ABS Threaded socket Rp reinforced
G40 PE-100 Fusion socket metric
G41 PE-100 Butt fusion spigot SDR11 metric
G42 PE-100 Butt fusion spigot SDR17.6 metric
G43 PE-100 Butt fusion spigot long SDR11 metric
G44 PE-100 Butt fusion spigot long SDR17.6 metric (DN65-100)
G83 ABS Valve end blank

Multi-functional module
I01 No multi-functional module
I02 Empty module
I03 Module with 2 end switches Ag, Ni
I04 Module with 2 end switches Au
I05 Module with 2 inductive switches Namur
I06 Module with 2 inductive switches PNP
I07 Module with 2 inductive switches NPN

Lever
K01 Standard lever red
K02 Standard lever black
K11 Multi-functional lever red

Mounting plate
L01 without mounting plate
L02 with mounting plate

A01	B03	C	D	E	F	G	G	I	K	L
						left	right			

Copiable
GF ball valve type 546 with pneumatic actuator

It's so easy to configurate the type 546:
With the configurator, you have a choice of new pneumatic actuators PA11 and PA21 in 2 optimized sizes including a large range of accessories.

We supply what you put together.

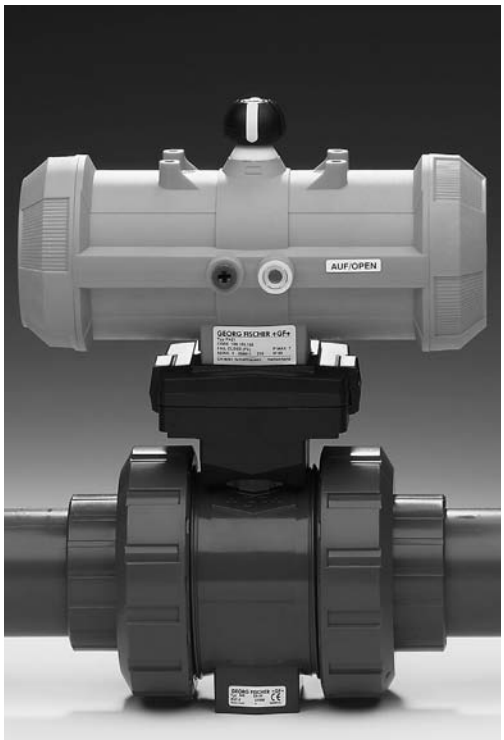

Pneumatic actuators PA11/PA21
P01 Fail safe to close PA11/PA21
P02 Fail safe to open PA11/21
P03 Double acting PA11/21
P30 Fail safe to close PA30/90
P31 Fail safe to open PA30/90
P32 Double acting PA30/90

Manual override
Q01 without manual override
Q02 with manual override

Stroke limiter
R01 without stroke limiter
R02 with stroke limiter

P	Q	R	

Ball valves

Ball valve type 546 PP-H
With fusion sockets metric

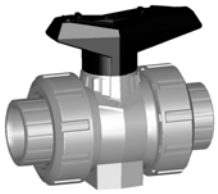

DN10/15 - 50

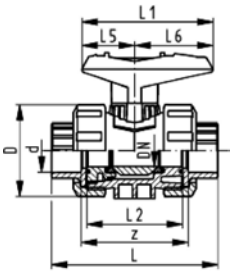

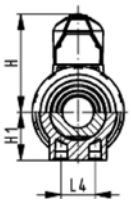

Model:

- Image and drawing DN65-100 please see **New product ball valve DN65-100**
- For easy installation and removal
- z-dimension, valve end and valve nut are **not compatible** with type 346 (DN10/15-50) resp. type 370 (DN65-100)
- Ball seals PTFE
- Without mounting inserts

Option:

- Individual configuration of the valve (see form)
- Multifunctional module with integrated limit switches
- Pneumatic or electric actuators from +GF+

d [mm]	DN [mm]	PN	kv-value (Δp=1 bar) [l/min]	EPDM Code	FPM Code	kg
16	10	10	71	**167 546 001**	**167 546 011**	0.115
20	15	10	185	**167 546 002**	**167 546 012**	0.115
25	20	10	350	**167 546 003**	**167 546 013**	0.180
32	25	10	700	**167 546 004**	**167 546 014**	0.255
40	32	10	1000	**167 546 005**	**167 546 015**	0.440
50	40	10	1600	**167 546 006**	**167 546 016**	0.610
63	50	10	3100	**167 546 007**	**167 546 017**	1.145
New 75	65	10	5000	**167 546 008**	**167 546 018**	3.700
New 90	80	10	7000	**167 546 009**	**167 546 019**	5.500
New 110	100	10	11000	**167 546 010**	**167 546 020**	8.700

d [mm]	D [mm]	H [mm]	H1 [mm]	L [mm]	L1 [mm]	L2 [mm]	L4 [mm]	L5 [mm]	L6 [mm]	z [mm]
16	50	57	27	93	77	56	25	32	45	67
20	50	57	27	95	77	56	25	32	45	66
25	58	67	30	109	97	65	25	39	58	77
32	68	73	36	119	97	71	25	39	58	83
40	84	90	44	135	128	85	45	54	74	99
50	97	97	51	147	128	89	45	54	74	105
63	124	116	64	168	152	101	45	66	87	117
New 75	166	149	85	233	270	136	70	64	206	167
New 90	200	161	105	254	270	141	70	64	206	180
New 110	238	178	123	301	320	164	120	64	256	215

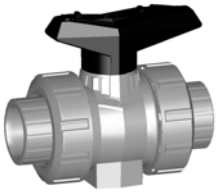

DN10/15 - 50

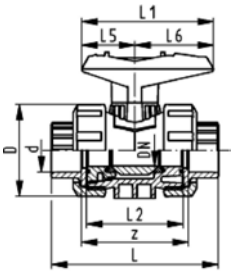

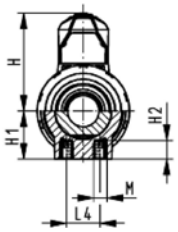

Ball valve type 546 PP-H
With mounting inserts
With fusion sockets metric

Model:

- Image and drawing DN65-100 please see **New product ball valve DN65-100**
- For easy installation and removal
- z-dimension, valve end and valve nut are **not compatible** with type 346 (DN10/15-50) resp. type 370 (DN65-100)
- Ball seals PTFE
- Integrated stainless steel mounting inserts

Option:

- Individual configuration of the valve (see form)
- Multifunctional module with integrated limit switches
- Pneumatic or electric actuators from +GF+

d [mm]	DN [mm]	PN	kv-value (Δp=1 bar) [l/min]	EPDM Code	FPM Code	kg
16	10	10	71	**167 546 401**	**167 546 411**	0.115
20	15	10	185	**167 546 402**	**167 546 412**	0.115
25	20	10	350	**167 546 403**	**167 546 413**	0.180
32	25	10	700	**167 546 404**	**167 546 414**	0.255
40	32	10	1000	**167 546 405**	**167 546 415**	0.440
50	40	10	1600	**167 546 406**	**167 546 416**	0.610
63	50	10	3100	**167 546 407**	**167 546 417**	1.145
New 75	65	10	5000	**167 546 408**	**167 546 418**	3.700
New 90	80	10	7000	**167 546 409**	**167 546 419**	5.500
New 110	100	10	11000	**167 546 410**	**167 546 420**	8.700

d [mm]	D [mm]	H [mm]	H1 [mm]	H2 [mm]	L [mm]	L1 [mm]	L2 [mm]	L4 [mm]	L5 [mm]	L6 [mm]	M	z [mm]
16	50	57	27	12	93	77	56	25	32	45	M6	67
20	50	57	27	12	95	77	56	25	32	45	M6	66
25	58	67	30	12	109	97	65	25	39	58	M6	77
32	68	73	36	12	119	97	71	25	39	58	M6	83
40	84	90	44	15	135	128	85	45	54	74	M8	99
50	97	97	51	15	147	128	89	45	54	74	M8	105
63	124	116	64	15	168	152	101	45	66	87	M8	117
New 75	166	149	85	15	233	270	136	70	64	206	M8	167
New 90	200	161	105	15	254	270	141	70	64	206	M8	180
New 110	238	178	123	22	301	320	164	120	64	256	M12	215

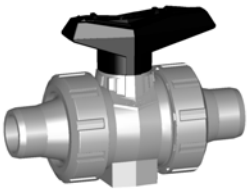

DN10/15 - 50

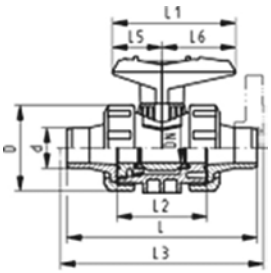

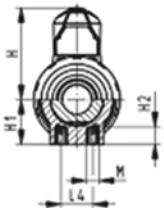

Ball valve type 546 PP-H
With mounting inserts
With socket fusion spigots metric

Model:

- Image and drawing DN65-100 please see **New product ball valve DN65-100**
- For easy installation and removal
- z-dimension, valve end and valve nut are **not compatible** with type 346 (DN10/15-50) resp. type 370 (DN65-100)
- Ball seals PTFE
- Integrated stainless steel mounting inserts

Option:

- Individual configuration of the valve (see form)
- Multifunctional module with integrated limit switches
- Pneumatic or electric actuators from +GF+

d [mm]	DN [mm]	PN	kv-value (Δp=1 bar) [l/min]	EPDM Code	FPM Code	kg
16	10	10	71	**167 546 041**	**167 546 051**	0.120
20	15	10	185	**167 546 042**	**167 546 052**	0.120
25	20	10	350	**167 546 043**	**167 546 053**	0.180
32	25	10	700	**167 546 044**	**167 546 054**	0.260
40	32	10	1000	**167 546 045**	**167 546 055**	0.450
50	40	10	1600	**167 546 046**	**167 546 056**	0.640
63	50	10	3100	**167 546 047**	**167 546 057**	1.210
New 75	65	10	5000	**167 546 048**	**167 546 058**	3.800
New 90	80	10	7000	**167 546 049**	**167 546 059**	5.600
New 110	100	10	11000	**167 546 050**	**167 546 060**	8.800

d [mm]	D [mm]	H [mm]	H1 [mm]	H2 [mm]	L [mm]	L1 [mm]	L2 [mm]	L3 [mm]	L4 [mm]	L5 [mm]	L6 [mm]	M
16	50	57	27	12	110	77	56		25	32	45	M6
20	50	57	27	12	120	77	56	130	25	32	45	M6
25	58	67	30	12	139	97	65	150	25	39	58	M6
32	68	73	36	12	150	97	71	160	25	39	58	M6
40	84	90	44	15	170	128	85	180	45	54	74	M8
50	97	97	51	15	190	128	89	200	45	54	74	M8
63	124	116	64	15	220	152	101	230	45	66	87	M8
New 75	166	149	85	15	280	270	136	290	70	64	206	M8
New 90	200	161	105	15	296	270	141	310	70	64	206	M8
New 110	238	178	123	22	336	320	164	350	120	64	256	M12

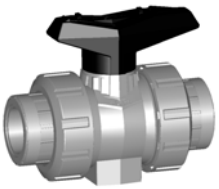

DN10/15 - 50

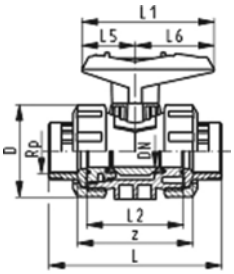

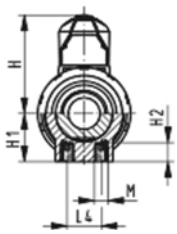

Ball valve type 546 PP-H
With mounting inserts
With threaded sockets Rp

Model:

- Image and drawing DN65-100 please see **New product ball valve DN65-100**
- For easy installation and removal
- z-dimension, valve end and valve nut are **not compatible** with type 346 (DN10/15-50) resp. type 370 (DN65-100)
- Ball seals PTFE
- Integrated stainless steel mounting inserts

Option:

- Individual configuration of the valve (see form)
- Multifunctional module with integrated limit switches
- Pneumatic or electric actuators from +GF+

Rp [inch]	DN [mm]	PN	kv-value (Δp=1 bar) [l/min]	EPDM Code	FPM Code	kg
⅜	10	10	71	**167 546 021**	**167 546 031**	0.120
½	15	10	185	**167 546 022**	**167 546 032**	0.120
¾	20	10	350	**167 546 023**	**167 546 033**	0.180
1	25	10	700	**167 546 024**	**167 546 034**	0.270
1 ¼	32	10	1000	**167 546 025**	**167 546 035**	0.460
1 ½	40	10	1600	**167 546 026**	**167 546 036**	0.635
2	50	10	3100	**167 546 027**	**167 546 037**	1.190

Rp [inch]	D [mm]	H [mm]	H1 [mm]	H2 [mm]	L [mm]	L1 [mm]	L2 [mm]	L4 [mm]	L5 [mm]	L6 [mm]	M	z [mm]
⅜	50	57	27	12	96	77	56	25	32	45	M6	69
½	50	57	27	12	99	77	56	25	32	45	M6	67
¾	58	67	30	12	111	97	65	25	39	58	M6	78
1	68	73	36	12	127	97	71	25	39	58	M6	85
1 ¼	84	90	44	15	146	128	85	45	54	74	M8	100
1 ½	97	97	51	15	157	128	89	45	54	74	M8	106
2	124	116	64	15	183	152	101	45	66	87	M8	121

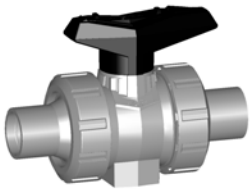

DN10/15 - 50

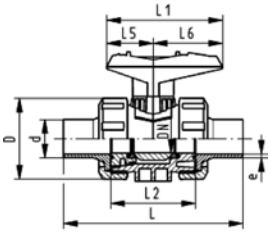

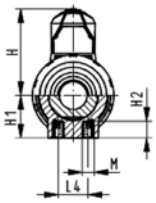

Ball valve type 546 PP-H
With mounting inserts
With butt fusion spigots IR-Plus SDR11 metric

Model:

- Image and drawing DN65-100 please see **New product ball valve DN65-100**
- For easy installation and removal
- z-dimension, valve end and valve nut are **not compatible** with type 346 (DN10/15-50) resp. type 370 (DN65-100)
- Ball seals PTFE
- Integrated stainless steel mounting inserts

Option:

- Individual configuration of the valve (see form)
- Multifunctional module with integrated limit switches
- Pneumatic or electric actuators from +GF+

d [mm]	DN [mm]	PN	kv-value (Δp=1 bar) [l/min]	EPDM Code	FPM Code	kg
20	15	10	185	**167 546 442**	**167 546 452**	0.120
25	20	10	350	**167 546 443**	**167 546 453**	0.180
32	25	10	700	**167 546 444**	**167 546 454**	0.255
40	32	10	1000	**167 546 445**	**167 546 455**	0.440
50	40	10	1600	**167 546 446**	**167 546 456**	0.620
63	50	10	3100	**167 546 447**	**167 546 457**	1.200
New 75	65	10	5000	**167 546 448**	**167 546 458**	3.800
New 90	80	10	7000	**167 546 449**	**167 546 459**	5.500
New 110	100	10	11000	**167 546 450**	**167 546 460**	8.700

d [mm]	D [mm]	H [mm]	H1 [mm]	H2 [mm]	L [mm]	L1 [mm]	L2 [mm]	L4 [mm]	L5 [mm]	L6 [mm]	M	e [mm]
20	50	57	27	12	130	77	56	25	32	45	M6	1,9
25	58	67	30	12	143	97	65	25	39	58	M6	2,3
32	68	73	36	12	150	97	71	25	39	58	M6	3
40	84	90	44	15	171	128	85	45	54	74	M8	3,7
50	97	97	51	15	191	128	89	45	54	74	M8	4,6
63	124	116	64	15	220	152	101	45	66	87	M8	5,8
New 75	166	149	85	15	266	270	136	70	64	206	M8	8.2
New 90	200	161	105	15	264	270	141	70	64	206	M8	9.9
New 110	238	178	123	22	301	320	164	120	64	256	M12	12

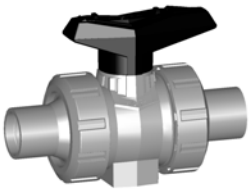

DN10/15 - 50

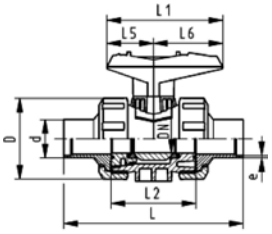

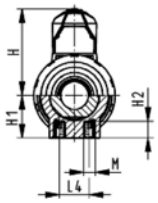

Ball valve type 546 PP-H
With mounting inserts
With butt fusion spigots SDR17.6 metric

Model:

- Image and drawing DN65-100 please see **New product ball valve DN65-100**
- For easy installation and removal
- z-dimension, valve end and valve nut are **not compatible** with type 346 (DN10/15-50) resp. type 370 (DN65-100)
- Ball seals PTFE
- Integrated stainless steel mounting inserts

Option:

- Individual configuration of the valve (see form)
- Multifunctional module with integrated limit switches
- Pneumatic or electric actuators from +GF+

d [mm]	DN [mm]	PN	kv-value (Δp=1 bar) [l/min]	EPDM Code	FPM Code	kg
50	40	6	1600	**167 546 066**	**167 546 076**	0.635
63	50	6	3100	**167 546 067**	**167 546 077**	1.200
New 75	65	6	5000	**167 546 068**	**167 546 078**	3.800
New 90	80	6	7000	**167 546 069**	**167 546 079**	5.500
New 110	100	6	11000	**167 546 070**	**167 546 080**	8.600

d [mm]	D [mm]	H [mm]	H1 [mm]	H2 [mm]	L [mm]	L1 [mm]	L2 [mm]	L4 [mm]	L5 [mm]	L6 [mm]	M	e [mm]
50	97	97	51	15	191	128	89	45	54	74	M8	2,9
63	124	116	64	15	220	152	101	45	66	87	M8	3,6
New 75	166	149	85	15	266	270	136	70	64	206	M8	4.7
New 90	200	161	105	15	264	270	141	70	64	206	M8	5.5
New 110	238	178	123	22	301	320	164	120	64	256	M12	6.8

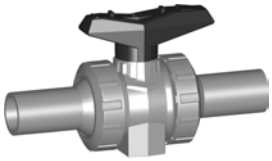

DN10/15 - 50

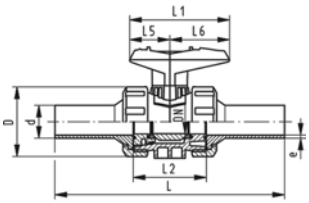

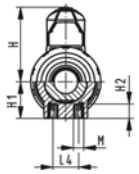

Ball valve type 546 PP-H
With mounting inserts
With butt fusion spigots long SDR11 metric

Model:

- Image and drawing DN65-100 please see **New product ball valve DN65-100**
- For easy installation and removal
- z-dimension, valve end and valve nut are **not compatible** with type 346 (DN10/15-50) resp. type 370 (DN65-100)
- Ball seals PTFE
- Integrated stainless steel mounting inserts

Option:

- Individual configuration of the valve (see form)
- Multifunctional module with integrated limit switches
- Pneumatic or electric actuators from +GF+

d [mm]	DN [mm]	PN	kv-value (Δp=1 bar) [l/min]	EPDM Code	FPM Code	kg
20	15	10	185	**167 546 262**	**167 546 272**	0.130
25	20	10	350	**167 546 263**	**167 546 273**	0.195
32	25	10	700	**167 546 264**	**167 546 274**	0.280
40	32	10	1000	**167 546 265**	**167 546 275**	0.480
50	40	10	1600	**167 546 266**	**167 546 276**	0.700
63	50	10	3100	**167 546 267**	**167 546 277**	1.320

d [mm]	D [mm]	H [mm]	H1 [mm]	H2 [mm]	L [mm]	L1 [mm]	L2 [mm]	L4 [mm]	L5 [mm]	L6 [mm]	M	e [mm]
20	50	57	27	12	193	77	56	25	32	45	M6	2,3
25	58	67	30	12	216	97	65	25	39	58	M6	2,3
32	68	73	36	12	223	97	71	25	39	58	M6	3
40	84	90	44	15	249	128	85	45	54	74	M8	3,7
50	97	97	51	15	271	128	89	45	54	74	M8	4,6
63	124	116	64	15	321	152	101	45	66	87	M8	5,8

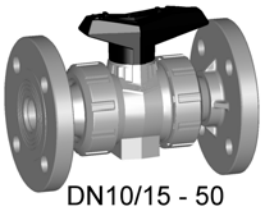

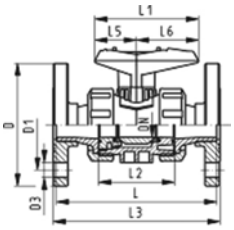

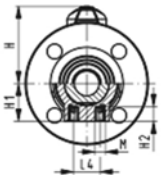

Ball valve type 546 PP-H
With mounting inserts
With fixed flanges PP-H serrated metric

Model:

- Image and drawing DN65-100 please see **New product ball valve DN65-100**
- For easy installation and removal
- z-dimension, valve end and valve nut are **not compatible** with type 346 (DN10/15-50) resp. type 370 (DN65-100)
- Ball seals PTFE
- Integrated stainless steel mounting inserts
- Overall length EN 558-1
- Connecting dimensions: ISO 7005 / EN 1092 / DIN 2501 PN10 / BS4504

Option:

- Individual configuration of the valve (see form)
- Multifunctional module with integrated limit switches
- Pneumatic or electric actuators from +GF+

d [mm]	DN [mm]	Inch	PN	kv-value (Δp=1 bar) [l/min]	EPDM Code	FPM Code	kg
20	15	½	10	185	**167 546 182**	**167 546 192**	0.245
25	20	¾	10	350	**167 546 183**	**167 546 193**	0.345
32	25	1	10	700	**167 546 184**	**167 546 194**	0.495
40	32	1 ¼	10	1000	**167 546 185**	**167 546 195**	0.830
50	40	1 ½	10	1600	**167 546 186**	**167 546 196**	1.100
63	50	2	10	3100	**167 546 187**	**167 546 197**	1.830

d [mm]	D [mm]	D1 [mm]	D3 [mm]	H [mm]	H1 [mm]	H2 [mm]	L [mm]	L1 [mm]	L2 [mm]	L3 [mm]	L4 [mm]	L5 [mm]	L6 [mm]	M
20	95	65	14	57	27	12	120	77	56	130	25	32	45	M6
25	105	75	14	67	30	12	140	97	65	150	25	39	58	M6
32	115	85	14	73	36	12	150	97	71	160	25	39	58	M6
40	140	100	18	90	44	15	170	128	85	180	45	54	74	M8
50	150	110	18	97	51	15	190	128	89	200	45	54	74	M8
63	165	125	18	116	64	15	220	152	101	230	45	66	87	M8

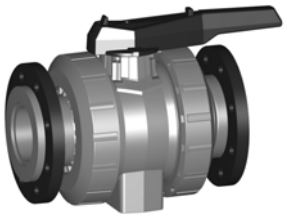

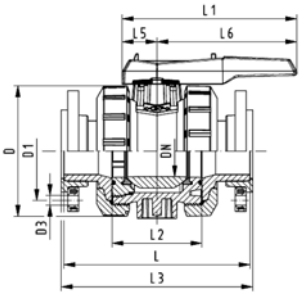

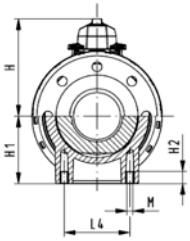

Ball valve type 546 PP-H
With mounting inserts
With backing flanges PP-st metric

Model:

- Image and drawing DN65-100 please see **New product ball valve DN65-100**
- For easy installation and removal
- z-dimension, valve end and valve nut are **not compatible** with type 346 (DN10/15-50) resp. type 370 (DN65-100)
- Ball seals PTFE
- Integrated stainless steel mounting inserts
- Overall length according to EN 558-1
- Connecting dimensions: ISO 7005, EN 1092, BS 4504, DIN 2501; bolt circle PN 10

Option:

- Individual configuration of the valve (see form)
- Multifunctional module with integrated limit switches
- Pneumatic or electric actuators from +GF+

d [mm]	DN [mm]	PN	kv-value (Δp=1 bar) [l/min]	EPDM Code	FPM Code	kg
New 75	65	10	5000	**167 546 808**	**167 546 818**	4.300
New 90	80	10	7000	**167 546 809**	**167 546 819**	6.400
New 110	100	10	11000	**167 546 810**	**167 546 820**	10.000

d [mm]	D [mm]	D1 [mm]	D3 [mm]	L [mm]	L1 [mm]	L2 [mm]	L3 [mm]	L4 [mm]	L5 [mm]	L6 [mm]	H [mm]	H1 [mm]	M
New 75	166	145	18	280	270	136	290	70	64	206	149	85	8
New 90	200	160	18	296	270	141	310	70	64	206	161	105	8
New 110	238	180	18	336	320	164	350	120	64	256	178	123	12

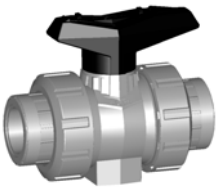

DN10/15 - 50

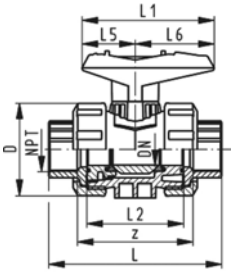

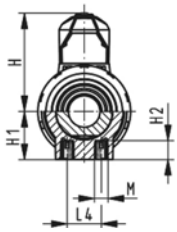

Ball valve type 546 PP-H
With mounting inserts
With threaded sockets NPT

Model:

- Image and drawing DN65-100 please see **New product ball valve DN65-100**
- For easy installation and removal
- z-dimension, valve end and valve nut are **not compatible** with type 346 (DN10/15-50) resp. type 370 (DN65-100)
- Ball seals PTFE
- Integrated stainless steel mounting inserts

Option:

- Individual configuration of the valve (see form)
- Multifunctional module with integrated limit switches
- Pneumatic or electric actuators from +GF+

NPT [inch]	DN [mm]	PN	kv-value (Δp=1 bar) [l/min]	EPDM Code	FPM Code	kg
⅜	10	10	71	**167 546 321**	**167 546 331**	0.120
½	15	10	185	**167 546 322**	**167 546 332**	0.120
¾	20	10	350	**167 546 323**	**167 546 333**	0.180
1	25	10	700	**167 546 324**	**167 546 334**	0.270
1 ¼	32	10	1000	**167 546 325**	**167 546 335**	0.460
1 ½	40	10	1600	**167 546 326**	**167 546 336**	0.635
2	50	10	3100	**167 546 327**	**167 546 337**	1.190

NPT [inch]	D [mm]	H [mm]	H1 [mm]	H2 [mm]	L [mm]	L1 [mm]	L2 [mm]	L4 [mm]	L5 [mm]	L6 [mm]	M	z [mm]
⅜	50	57	27	12	96	77	56	25	32	45	M6	71
½	50	57	27	12	99	77	56	25	32	45	M6	64
¾	58	67	30	12	111	97	65	25	39	58	M6	76
1	68	73	36	12	127	97	71	25	39	58	M6	83
1 ¼	84	90	44	15	146	128	85	45	54	74	M8	100
1 ½	97	97	51	15	157	128	89	45	54	74	M8	111
2	124	116	64	15	183	152	101	45	66	87	M8	134

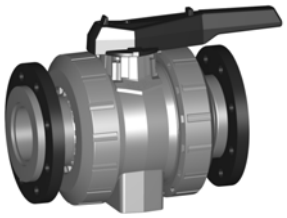

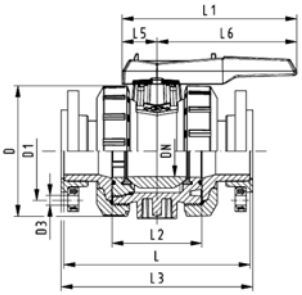

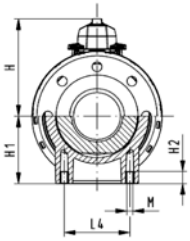

Ball valve type 546 PP-H
With mounting inserts
With backing flanges PP-st ANSI

Model:

- Image and drawing DN65-100 please see **New product ball valve DN65-100**
- For easy installation and removal
- z-dimension, valve end and valve nut are **not compatible** with type 346 (DN10/15-50) resp. type 370 (DN65-100)
- Ball seals PTFE
- Integrated stainless steel mounting inserts
- Overall length according to EN 558-1
- Connecting dimension ANSI/ASME B 16.5 / ASTM D 4024

Option:

- Individual configuration of the valve (see form)
- Multifunctional module with integrated limit switches
- Pneumatic or electric actuators from +GF+

Inch	DN [mm]	PN	kv-value (Δp=1 bar) [l/min]	EPDM Code	FPM Code	kg
New 2 ½	65	10	5000	**167 546 868**	**167 546 878**	4.300
New 3	80	10	7000	**167 546 869**	**167 546 879**	6.400
New 4	100	10	11000	**167 546 870**	**167 546 880**	10.000

Inch	D [mm]	D1 [mm]	D3 [mm]	L [mm]	L1 [mm]	L2 [mm]	L3 [mm]	L4 [mm]	L5 [mm]	L6 [mm]	H [mm]	H1 [mm]	M
New 2 ½	166	140	19	280	270	136	290	70	64	206	149	85	8
New 3	200	152	19	296	270	141	310	70	64	206	161	105	8
New 4	238	191	19	336	320	164	350	120	64	256	178	123	12

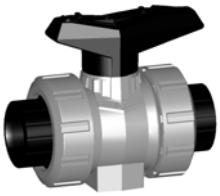

DN10/15 - 50

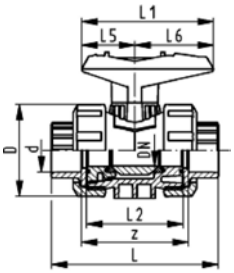

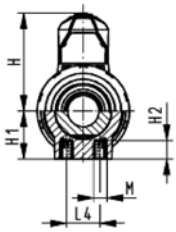

Ball valve type 546 PP-H
With mounting inserts
With fusion sockets PE 100 metric

Model:

- Image and drawing DN65-100 please see **New product ball valve DN65-100**
- For easy installation and removal
- z-dimension, valve end and valve nut are **not compatible** with type 346 (DN10/15-50) resp. type 370 (DN65-100)
- Ball seals PTFE
- Integrated stainless steel mounting inserts

Option:

- Individual configuration of the valve (see form)
- Multifunctional module with integrated limit switches
- Pneumatic or electric actuators from +GF+

d [mm]	DN [mm]	PN	kv-value (Δp=1 bar) [l/min]	EPDM Code	FPM Code	kg
16	10	10	71	**167 546 161**	**167 546 171**	0.120
20	15	10	185	**167 546 162**	**167 546 172**	0.120
25	20	10	350	**167 546 163**	**167 546 173**	0.180
32	25	10	700	**167 546 164**	**167 546 174**	0.260
40	32	10	1000	**167 546 165**	**167 546 175**	0.450
50	40	10	1600	**167 546 166**	**167 546 176**	0.630
63	50	10	3100	**167 546 167**	**167 546 177**	1.195

d [mm]	D [mm]	H [mm]	H1 [mm]	H2 [mm]	L [mm]	L1 [mm]	L2 [mm]	L4 [mm]	L5 [mm]	L6 [mm]	M	z [mm]
16	50	57	27	12	93	77	56	25	32	45	M6	67
20	50	57	27	12	95	77	56	25	32	45	M6	67
25	58	67	30	12	109	97	65	25	39	58	M6	77
32	68	73	36	12	119	97	71	25	39	58	M6	83
40	84	90	44	15	135	128	85	45	54	74	M8	99
50	97	97	51	15	147	128	89	45	54	74	M8	105
63	124	116	64	15	168	152	101	45	66	87	M8	113

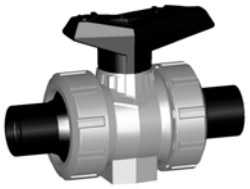

DN10/15 - 50

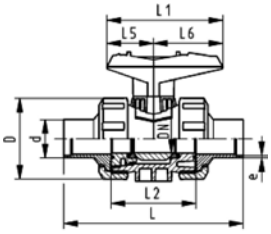

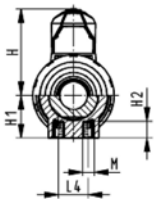

Ball valve type 546 PP-H
With mounting inserts
With butt fusion spigots PE 100 SDR11 metric

Model:

- Image and drawing DN65-100 please see **New product ball valve DN65-100**
- For easy installation and removal
- z-dimension, valve end and valve nut are **not compatible** with type 346 (DN10/15-50) resp. type 370 (DN65-100)
- Ball seals PTFE
- Integrated stainless steel mounting inserts

Option:

- Individual configuration of the valve (see form)
- Multifunctional module with integrated limit switches
- Pneumatic or electric actuators from +GF+

d [mm]	DN [mm]	PN	kv-value (Δp=1 bar) [l/min]	EPDM Code	FPM Code	kg
20	15	10	185	**167 546 142**	**167 546 152**	0.120
25	20	10	350	**167 546 143**	**167 546 153**	0.180
32	25	10	700	**167 546 144**	**167 546 154**	0.255
40	32	10	1000	**167 546 145**	**167 546 155**	0.440
50	40	10	1600	**167 546 146**	**167 546 156**	0.620
63	50	10	3100	**167 546 147**	**167 546 157**	1.200

d [mm]	D [mm]	H [mm]	H1 [mm]	H2 [mm]	L [mm]	L1 [mm]	L2 [mm]	L3 [mm]	L4 [mm]	L5 [mm]	L6 [mm]	M	e [mm]
20	50	57	27	12	130	77	56	130	25	32	45	M6	1,9
25	58	67	30	12	143	97	65	150	25	39	58	M6	2,3
32	68	73	36	12	150	97	71	160	25	39	58	M6	3
40	84	90	44	15	171	128	85	180	45	54	74	M8	3,7
50	97	97	51	15	191	128	89	200	45	54	74	M8	4,6
63	124	116	64	15	220	152	101	230	45	66	87	M8	5,8

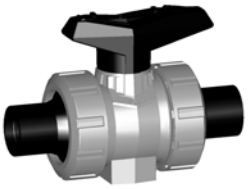

DN10/15 - 50

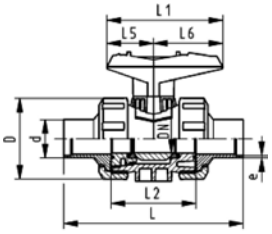

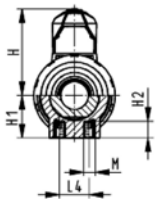

Ball valve type 546 PP-H
With mounting inserts
With butt fusion spigots PE 100 SDR17.6 metric

Model:

- Image and drawing DN65-100 please see **New product ball valve DN65-100**
- For easy installation and removal
- z-dimension, valve end and valve nut are **not compatible** with type 346 (DN10/15-50) resp. type 370 (DN65-100)
- Ball seals PTFE
- Integrated stainless steel mounting inserts

Option:

- Individual configuration of the valve (see form)
- Multifunctional module with integrated limit switches
- Pneumatic or electric actuators from +GF+

d [mm]	DN [mm]	PN	kv-value (Δp=1 bar) [l/min]	EPDM Code	FPM Code	kg
50	40	6	1600	**167 546 126**	**167 546 136**	0.620
63	50	6	3100	**167 546 127**	**167 546 137**	1.200

d [mm]	D [mm]	H [mm]	H1 [mm]	H2 [mm]	L [mm]	L1 [mm]	L2 [mm]	L4 [mm]	L5 [mm]	L6 [mm]	M	e [mm]
50	97	97	51	15	191	128	89	45	54	74	M8	2,9
63	124	116	64	15	220	152	101	45	66	87	M8	3,6

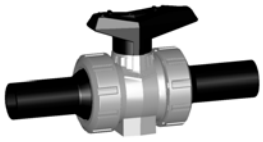

DN10/15 - 50

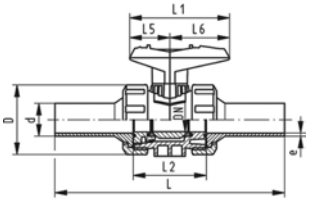

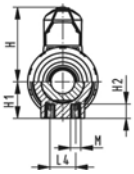

Ball valve type 546 PP-H
With mounting inserts
With butt fusion spigots long PE 100 SDR11 metric

Model:

- Image and drawing DN65-100 please see **New product ball valve DN65-100**
- For easy installation and removal
- z-dimension, valve end and valve nut are **not compatible** with type 346 (DN10/15-50) resp. type 370 (DN65-100)
- Ball seals PTFE
- Integrated stainless steel mounting inserts

Option:

- Individual configuration of the valve (see form)
- Multifunctional module with integrated limit switches
- Pneumatic or electric actuators from +GF+

d [mm]	DN [mm]	PN	kv-value (Δp=1 bar) [l/min]	EPDM Code	FPM Code	kg
20	15	10	185	**167 546 282**	**167 546 292**	0.130
25	20	10	350	**167 546 283**	**167 546 293**	0.195
32	25	10	700	**167 546 284**	**167 546 294**	0.280
40	32	10	1000	**167 546 285**	**167 546 295**	0.485
50	40	10	1600	**167 546 286**	**167 546 296**	0.695
63	50	10	3100	**167 546 287**	**167 546 297**	1.320
New 75	65	10	5000	**167 546 288**	**167 546 298**	3.900
New 90	80	10	7000	**167 546 289**	**167 546 299**	5.900
New 110	100	10	11000	**167 546 290**	**167 546 300**	9.300

d [mm]	D [mm]	H [mm]	H1 [mm]	H2 [mm]	L [mm]	L1 [mm]	L2 [mm]	L4 [mm]	L5 [mm]	L6 [mm]	M	e [mm]
20	50	57	27	12	193	77	56	25	32	45	M6	2,3
25	58	67	30	12	216	97	65	25	39	58	M6	2,3
32	68	73	36	12	223	97	71	25	39	58	M6	3
40	84	90	44	15	249	128	85	45	54	74	M8	3,7
50	97	97	51	15	271	128	89	45	54	74	M8	4,6
63	124	116	64	15	321	152	101	45	66	87	M8	5,8
New 75	166	149	85	15	386	270	136	70	64	206	M8	6.8
New 90	200	161	105	15	421	270	141	70	64	206	M8	8.2
New 110	238	178	123	22	484	320	164	120	64	256	M12	10

DN10/15 - 50

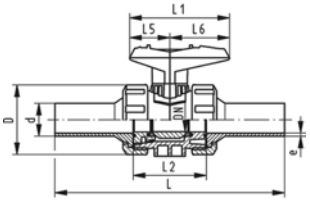

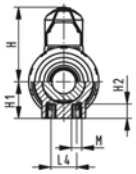

Ball valve type 546 PP-H
With mounting inserts
With butt fusion spigots long PE 100 SDR17,6 metric

Model:

- Image and drawing DN65-100 please see **New product ball valve DN65-100**
- For easy installation and removal
- z-dimension, valve end and valve nut are **not compatible** with type 346 (DN10/15-50) resp. type 370 (DN65-100)
- Ball seals PTFE
- Integrated stainless steel mounting inserts

Option:

- Individual configuration of the valve (see form)
- Multifunctional module with integrated limit switches
- Pneumatic or electric actuators from +GF+

d [mm]	DN [mm]	PN	kv-value (Δp=1 bar) [l/min]	EPDM Code	FPM Code	kg
New 75	65	10	5000	**167 546 308**	**167 546 318**	3.900
New 90	80	10	7000	**167 546 309**	**167 546 319**	5.800
New 110	100	10	11000	**167 546 310**	**167 546 320**	9.200

d [mm]	D [mm]	H [mm]	H1 [mm]	H2 [mm]	L [mm]	L1 [mm]	L2 [mm]	L4 [mm]	L5 [mm]	L6 [mm]	M	e [mm]
New 75	166	149	85	15	386	270	136	70	64	206	8	4.3
New 90	200	161	105	15	421	270	141	70	64	206	8	5.1
New 110	238	178	123	22	484	320	164	120	64	256	12	6.3

DN10/15 - 50

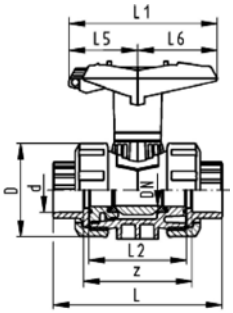

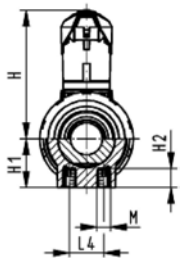

Ball valve type 546 PP-H
With lockable handle
With fusion sockets metric

Model:

- Image and drawing DN65-100 please see **New product ball valve DN65-100**
- For easy installation and removal
- z-dimension, valve end and valve nut are **not compatible** with type 346 (DN10/15-50) resp. type 370 (DN65-100)
- Ball seals PTFE
- Integrated stainless steel mounting inserts
- Lockable hand lever with ratchet settings

Option:

- Individual configuration of the valve (see form)
- Multifunctional module with integrated limit switches
- Pneumatic or electric actuators from +GF+

d [mm]	DN [mm]	PN	kv-value (Δp=1 bar) [l/min]	EPDM Code	FPM Code	kg
16	10	10	71	**167 546 421**	**167 546 431**	0.125
20	15	10	185	**167 546 422**	**167 546 432**	0.125
25	20	10	350	**167 546 423**	**167 546 433**	0.195
32	25	10	700	**167 546 424**	**167 546 434**	0.270
40	32	10	1000	**167 546 425**	**167 546 435**	0.465
50	40	10	1600	**167 546 426**	**167 546 436**	0.635
63	50	10	3100	**167 546 427**	**167 546 437**	1.175
New 75	65	10	5000	**167 546 428**	**167 546 438**	4.000
New 90	80	10	7000	**167 546 429**	**167 546 439**	5.900
New 110	100	10	11000	**167 546 430**	**167 546 440**	9.100

d [mm]	D [mm]	H [mm]	H1 [mm]	H2 [mm]	L [mm]	L1 [mm]	L2 [mm]	L4 [mm]	L5 [mm]	L6 [mm]	M	z [mm]
16	50	79	27	12	93	77	56	25	32	45	M6	67
20	50	79	27	12	95	77	56	25	32	45	M6	66
25	58	88	30	12	109	97	65	25	39	58	M6	77
32	68	94	36	12	119	97	71	25	39	58	M6	83
40	84	113	44	15	135	128	85	45	54	74	M8	99
50	97	119	51	15	147	128	89	45	54	74	M8	105
63	124	141	64	15	168	152	101	45	66	87	M8	117
New 75	166	224	85	15	233	270	136	70	64	206	M8	167
New 90	200	235	105	15	254	270	141	70	64	206	M8	180
New 110	238	245	123	22	301	320	164	120	64	256	M12	215

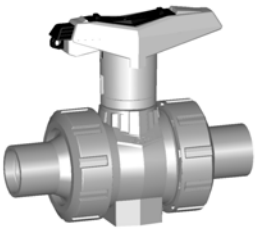

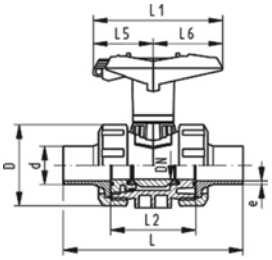

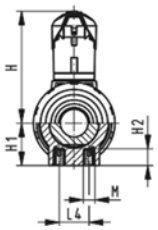

Ball valve type 546 PP-H
With lockable handle
With butt fusion spigots IR-Plus SDR11 metric

Model:

- Image and drawing DN65-100 please see **New product ball valve DN65-100**
- For easy installation and removal
- z-dimension, valve end and valve nut are **not compatible** with type 346 (DN10/15-50) resp. type 370 (DN65-100)
- Ball seals PTFE
- Integrated stainless steel mounting inserts
- Lockable hand lever with ratchet settings

Option:

- Individual configuration of the valve (see form)
- Multifunctional module with integrated limit switches
- Pneumatic or electric actuators from +GF+

d [mm]	DN [mm]	PN	kv-value (Δp=1 bar) [l/min]	EPDM Code	FPM Code	kg
20	15	10	185	**167 546 462**	**167 546 472**	0.130
25	20	10	350	**167 546 463**	**167 546 473**	0.195
32	25	10	700	**167 546 464**	**167 546 474**	0.270
40	32	10	1000	**167 546 465**	**167 546 475**	0.465
50	40	10	1600	**167 546 466**	**167 546 476**	0.645
63	50	10	3100	**167 546 467**	**167 546 477**	1.230
New 75	65	10	5000	**167 546 468**	**167 546 478**	4.100
New 90	80	10	7000	**167 546 469**	**167 546 479**	5.900
New 110	100	10	11000	**167 546 470**	**167 546 480**	9.000

d [mm]	D [mm]	H [mm]	H1 [mm]	H2 [mm]	L [mm]	L1 [mm]	L2 [mm]	L4 [mm]	L5 [mm]	L6 [mm]	M	e [mm]
20	50	79	27	12	130	87	56	25	42	45	M6	1,9
25	58	88	30	12	143	108	65	25	50	58	M6	2,3
32	68	94	36	12	150	108	71	25	50	58	M6	3
40	84	113	44	15	171	140	85	45	66	75	M8	3,7
50	97	119	51	15	191	140	89	45	66	75	M8	4,6
63	124	141	64	15	220	165	101	45	78	87	M8	5,8
New 75	166	149	85	15	266	270	136	70	64	206	M8	8.2
New 90	200	161	105	15	264	270	141	70	64	206	M8	9.9
New 110	238	178	123	22	301	320	164	120	64	256	M12	12

Ball valves

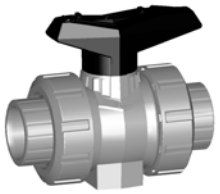

DN10/15 - 50

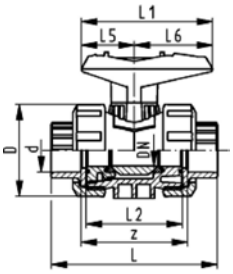

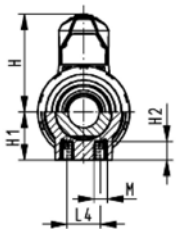

PROGEF® PLUS silicone free
Ball valve type 546 PP-H SF
With mounting inserts
With fusion sockets metric

Model:

- Image and drawing DN65-100 please see **New product ball valve DN65-100**
- Silicon-free / paint-compatible
- For easy installation and removal
- z-dimension, valve end and valve nut are **not compatible** with type 346 (DN10/15-50) resp. type 370 (DN65-100)
- Integrated stainless steel mounting inserts
- Double bagged
- Ball seals PVDF

Option:

- Individual configuration of the valve (see form)
- Multifunctional module with integrated limit switches

d [mm]	DN [mm]	PN	kv-value (Δp=1 bar) [l/min]	EPDM Code	FPM Code	kg
16	10	10	71	**167 546 601**	**167 546 611**	0.115
20	15	10	185	**167 546 602**	**167 546 612**	0.115
25	20	10	350	**167 546 603**	**167 546 613**	0.180
32	25	10	700	**167 546 604**	**167 546 614**	0.255
40	32	10	1000	**167 546 605**	**167 546 615**	0.440
50	40	10	1600	**167 546 606**	**167 546 616**	0.610
63	50	10	3100	**167 546 607**	**167 546 617**	1.145
New 75	65	10	5000	**167 546 608**	**167 546 618**	3.700
New 90	80	10	7000	**167 546 609**	**167 546 619**	5.500
New 110	100	10	11000	**167 546 610**	**167 546 620**	8.700

d [mm]	D [mm]	H [mm]	H1 [mm]	H2 [mm]	L [mm]	L1 [mm]	L2 [mm]	L4 [mm]	L5 [mm]	L6 [mm]	M	z [mm]
16	50	57	27	12	93	77	56	25	32	45	M6	67
20	50	57	27	12	95	77	56	25	32	45	M6	66
25	58	67	30	12	108	97	65	25	39	58	M6	77
32	68	73	36	12	118	97	71	25	39	58	M6	83
40	84	90	44	15	137	128	85	45	54	74	M8	99
50	97	97	51	15	147	128	89	45	54	74	M8	105
63	124	116	64	15	168	152	101	45	66	87	M8	117
New 75	166	149	85	15	233	270	136	70	64	206	M8	167
New 90	200	161	105	15	254	270	141	70	64	206	M8	180
New 110	238	178	123	22	301	320	164	120	64	256	M12	215

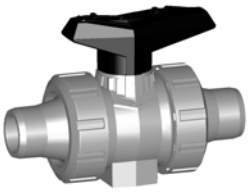

DN10/15 - 50

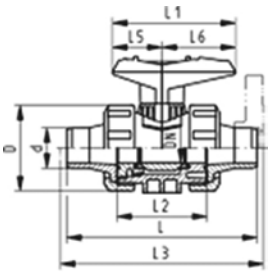

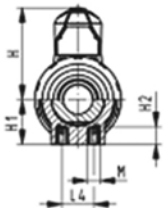

PROGEF® PLUS silicone free
Ball valve type 546 PP-H SF
With mounting inserts
With socket fusion spigots metric

Model:

- Image and drawing DN65-100 please see **New product ball valve DN65-100**
- Silicon-free / paint-compatible
- For easy installation and removal
- z-dimension, valve end and valve nut are **not compatible** with type 346 (DN10/15-50) resp. type 370 (DN65-100)
- Integrated stainless steel mounting inserts
- Double bagged
- Ball seals PVDF

Option:

- Individual configuration of the valve (see form)
- Multifunctional module with integrated limit switches

d [mm]	DN [mm]	PN	kv-value (Δp=1 bar) [l/min]	EPDM Code	FPM Code	kg
16	10	10	71	**167 546 621**	**167 546 631**	0.120
20	15	10	185	**167 546 622**	**167 546 632**	0.120
25	20	10	350	**167 546 623**	**167 546 633**	0.180
32	25	10	700	**167 546 624**	**167 546 634**	0.260
40	32	10	1000	**167 546 625**	**167 546 635**	0.450
50	40	10	1600	**167 546 626**	**167 546 636**	0.640
63	50	10	3100	**167 546 627**	**167 546 637**	1.210
New 75	65	10	5000	**167 546 628**	**167 546 638**	3.800
New 90	80	10	7000	**167 546 629**	**167 546 639**	5.600
New 110	100	10	11000	**167 546 630**	**167 546 640**	8.800

d [mm]	D [mm]	H [mm]	H1 [mm]	H2 [mm]	L [mm]	L1 [mm]	L2 [mm]	L3 [mm]	L4 [mm]	L5 [mm]	L6 [mm]	M
16	50	57	27	12	110	77	56		25	32	45	M6
20	50	57	27	12	120	77	56	130	25	32	45	M6
25	58	67	30	12	139	97	65	150	25	39	58	M6
32	68	73	36	12	150	97	71	160	25	39	58	M6
40	84	90	44	15	170	128	85	180	45	54	74	M8
50	97	97	51	15	190	128	89	200	45	54	74	M8
63	124	116	64	15	220	152	101	230	45	66	87	M8
New 75	166	149	85	15	280	270	136	290	70	64	206	M8
New 90	200	161	105	15	296	270	141	310	70	64	206	M8
New 110	238	178	123	22	336	320	164	350	120	64	256	M12

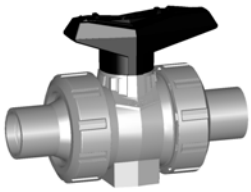

DN10/15 - 50

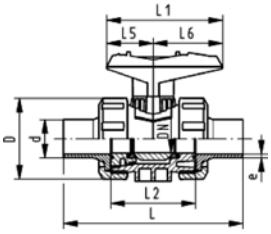

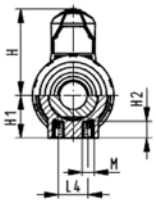

PROGEF® PLUS silicone free
Ball valve type 546 PP-H SF
With mounting inserts
With butt fusion spigots IR-Plus SDR11 metric

Model:

- Image and drawing DN65-100 please see **New product ball valve DN65-100**
- Silicon-free / paint-compatible
- For easy installation and removal
- z-dimension, valve end and valve nut are **not compatible** with type 346 (DN10/15-50) resp. type 370 (DN65-100)
- Integrated stainless steel mounting inserts
- Double bagged
- Ball seals PVDF

Option:

- Individual configuration of the valve (see form)
- Multifunctional module with integrated limit switches

d [mm]	DN [mm]	PN	kv-value (Δp=1 bar) [l/min]	EPDM Code	FPM Code	kg
20	15	10	185	**167 546 662**	**167 546 672**	0.120
25	20	10	350	**167 546 663**	**167 546 673**	0.180
32	25	10	700	**167 546 664**	**167 546 674**	0.255
40	32	10	1000	**167 546 665**	**167 546 675**	0.440
50	40	10	1600	**167 546 666**	**167 546 676**	0.620
63	50	10	3100	**167 546 667**	**167 546 677**	1.200
New 75	65	10	5000	**167 546 668**	**167 546 678**	3.800
New 90	80	10	7000	**167 546 669**	**167 546 679**	5.500
New 110	100	10	11000	**167 546 670**	**167 546 680**	8.700

d [mm]	D [mm]	H [mm]	H1 [mm]	H2 [mm]	L [mm]	L1 [mm]	L2 [mm]	L4 [mm]	L5 [mm]	L6 [mm]	M	e [mm]
20	50	57	27	12	130	77	56	25	32	45	M6	1,9
25	58	67	30	12	143	97	65	25	39	58	M6	2,3
32	68	73	36	12	150	97	71	25	39	58	M6	3
40	84	90	44	15	171	128	85	45	54	74	M8	3,7
50	97	97	51	15	191	128	89	45	54	74	M8	4,6
63	124	116	64	15	220	152	101	45	66	87	M8	5,8
New 75	166	149	85	15	266	270	136	70	64	206	M8	8.2
New 90	200	161	105	15	264	270	141	70	64	206	M8	9.9
New 110	238	178	123	22	301	320	164	120	64	256	M12	12

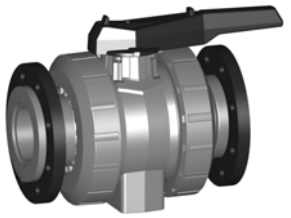

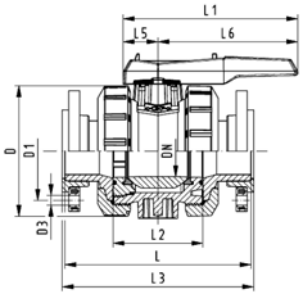

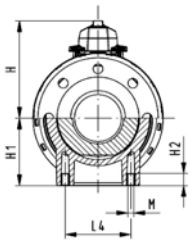

PROGEF® PLUS silicone free
Ball valve type 546 PP-H SF
With mounting inserts
With backing flanges PP-st metric

Model:

- Image and drawing DN65-100 please see **New product ball valve DN65-100**
- Silicon-free / paint-compatible
- For easy installation and removal
- z-dimension, valve end and valve nut are **not compatible** with type 346 (DN10/15-50) resp. type 370 (DN65-100)
- Integrated stainless steel mounting inserts
- Double bagged
- Ball seals PVDF
- Overall length according to EN 558-1
- Connecting dimensions: ISO 7005, EN 1092, BS 4504, DIN 2501; bolt circle PN 10

Option:

- Individual configuration of the valve (see form)
- Multifunctional module with integrated limit switches

d [mm]	DN [mm]	PN	kv-value (Δp=1 bar) [l/min]	EPDM Code	FPM Code	kg
New 75	65	10	5000	**167 546 828**	**167 546 838**	4.300
New 90	80	10	7000	**167 546 829**	**167 546 839**	6.400
New 110	100	10	11000	**167 546 830**	**167 546 840**	10.000

d [mm]	D [mm]	D1 [mm]	D3 [mm]	L [mm]	L1 [mm]	L2 [mm]	L3 [mm]	L4 [mm]	L5 [mm]	L6 [mm]	H [mm]	H1 [mm]	M
New 75	166	145	18	280	270	136	290	70	64	206	149	85	8
New 90	200	160	18	296	270	141	310	70	64	206	161	105	8
New 110	238	180	18	336	320	164	350	120	64	256	178	123	12

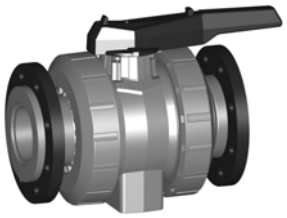

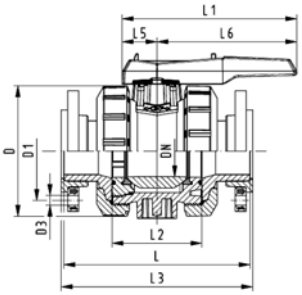

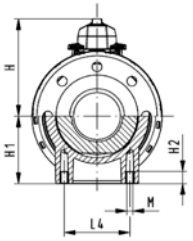

PROGEF® PLUS silicone free
Ball valve type 546 PP-H SF
With mounting inserts
With backing flanges PP-st ANSI

Model:

- Image and drawing DN65-100 please see **New product ball valve DN65-100**
- Silicon-free / paint-compatible
- For easy installation and removal
- z-dimension, valve end and valve nut are **not compatible** with type 346 (DN10/15-50) resp. type 370 (DN65-100)
- Integrated stainless steel mounting inserts
- Double bagged
- Ball seals PTFE
- Overall length according to EN 558-1
- Connecting dimension ANSI/ASME B 16.5 / ASTM D 4024

Option:

- Individual configuration of the valve (see form)
- Multifunctional module with integrated limit switches

d [mm]	DN [mm]	PN	kv-value (Δp=1 bar) [l/min]	EPDM Code	FPM Code	kg
New 75	65	10	5000	**167 546 888**	**167 546 898**	4.300
New 90	80	10	7000	**167 546 889**	**167 546 899**	6.400
New 110	100	10	11000	**167 546 890**	**167 546 900**	10.000

d [mm]	D [mm]	D1 [mm]	D3 [mm]	L [mm]	L1 [mm]	L2 [mm]	L3 [mm]	L4 [mm]	L5 [mm]	L6 [mm]	H [mm]	H1 [mm]	M
New 75	166	140	19	280	270	136	290	70	64	206	149	85	8
New 90	200	152	19	296	270	141	310	70	64	206	161	105	8
New 110	238	191	19	336	320	164	350	120	64	256	178	123	12

Copiable
Configurator GF ball valve type 546 PP-H

You will find a large selection of different versions in our range of products. New system elements also provide you with new opportunities for use. In order for us to supply exactly the ball valve you need for you application, we have created a selection menu for you.
(The maximum nominal pressure for the ball valve is PN10).
We supply what you put together.

Ball Valve
A01 Ball Valve 546
A02 Linear Ball Valve

Material
B05 PP-H

Dimension

C05	d 16	DN 10	3/8"
C06	d 20	DN 15	1/2"
C07	d 25	DN 20	3/4"
C08	d 32	DN 25	1"
C09	d 40	DN 32	1 1/4"
C10	d 50	DN 40	1 1/2"
C11	d 63	DN 50	2"
C12	d 75	DN 65	2 1/2"
C13	d 90	DN 80	3"
C14	d 110	DN 100	4"
C15	d 160	DN 150	6"

Version
D01 Standard, PTFE ball seal
D02 oilfree, PTFE ball seal (only with specific connecting parts)
D03 silicon-free, PTFE ball seal (only with specific connecting parts)
D04 silicon-free, PVDF ball seal for metric (only with specific connecting parts)

Seals
E01 EPDM seals
E02 FPM seals
E03 FFPM (KALREZ©) seals

Threaded inserts
F01 without threaded inserts
F02 with threaded inserts

Connecting parts
G30 PP-H Fusion socket metric
G32 PP-H Socket fusion spigot metric
G33 PP-H Threaded socket Rp reinforced
G34 PP-H Threaded socket NPT reinforced
G35 PP-H Butt fusion spigot SDR 11 metric IR-PLUS©
G36 PP-H Butt fusion spigot SDR 17.6 metric
with this valve end the maximum nominal pressure is reduced to PN 6
G37 PP-H Butt fusion spigot long SDR11 metric
G83 PP-H Valve end blank
G44 PE-100 Butt fusion spigot long SDR17.6 metric (DN65-100)
G63 Fixed flange PP-H serrated metric (DN10-50)
G72 Backing flange PP-steel metric
G73 Backing flange PP-steel inch ANSI
G77 Backing flange PP JIS with connecting parts
G78 Backing flange PP-GF JIS
G40 PE-100 Fusion socket metric
G41 PE-100 Butt fusion spigot SDR11 metric
G42 PE-100 Butt fusion spigot SDR17.6 metric
G43 PE-100 Butt fusion spigot long SDR11 metric

Multi-functional module
I01 No multi-functional module
I02 Empty module
I03 Module with 2 end switches Ag, Ni
I04 Module with 2 end switches Au
I05 Module with 2 inductive switches Namur
I06 Module with 2 inductive switches PNP
I07 Module with 2 inductive switches NPN

Lever
K01 Standard lever red
K02 Standard lever black
K11 Multi-functional lever red

Mounting plate
L01 without mounting plate
L02 with mounting plate

A01	B05	C	D	E	F	G	G	I	K	L
						left	right			

Find the fitting solution with the Configurator

Example:
Type 546 PP-H, nominal width DN 32,
PTFE ball seal, EPDM seals,
with threaded inserts and mounting plate,
Connecting part left, PP-H cement socket metric,
Connecting part right, PE-100 butt fusion spigot
SDR 11 metric
That's all it takes to configure your ball valve

Ball Valve
A01 Ball Valve 546
A02 Linear Ball Valve 546

Material
B05 PP-H

Dimension

C05	d 16	DN 10	3/8"
C06	d 20	DN 15	1/2"
C07	d 25	DN 20	3/4"
C08	d 32	DN 25	1"
C09	d 40	DN 32	1 1/4"
C10	d 50	DN 40	1 1/2"
C11	d 63	DN 50	2"
C12	d 75	DN 65	2 1/2"
C13	d 90	DN 80	3"
C14	d 110	DN 100	4"
C15	d 160	DN 150	6"

Version
D01 Standard, PTFE ball seal
D02 oilfree, PTFE ball seal (only with specific connecting parts)
D03 silicon-free, PTFE ball seal (only with specific connecting parts)
D04 silicon-free, PVDF ball seal for metric (only with specific connecting parts)

Seals
E01 EPDM Seals
E02 FPM Seals
E03 FFPM (KALREZ©) seals

Threaded inserts
F01 without threaded inserts
F02 with threaded inserts

Connecting parts
G30 PP-H Fusion socket metric
G32 PP-H Socket fusion spigot metric
G33 PP-H Threaded socket Rp reinforced
G34 PP-H Threaded socket NPT reinforced
G35 PP-H Butt fusion spigot SDR 11 metric IR Plus ®
G36 PP-H Butt fusion spigot SDR 17.6 metric (limited dimension range) with this valve end the maximum nominal pressure is reduced to PN 6
G37 PP-H Butt fusion spigot long SDR11 metric
G83 PP-H Valve end blank
G63 Fixed flange PP-H serrared metric
G72 Backing flange PP-steel metric
G73 Backing flange PP-steel inch ANSI
G77 Backing flange PP-GF JIS
G40 PE-100 Fusion socket metric
G41 PE-100 Butt fusion spigot SDR11 metric
G42 PE-100 Butt fusion spigot SDR17.6 metric (limited dimension range)
G43 PE-100 Butt fusion spigot long SDR11 metric
G44 PE-100 Butt fusion spigot long SDR17.6 metric (DN65-100)
G11 PVC-C Cement socket metric
G12 PVC-C Cement socket JIS
G13 PVC-C Cement socket inch ASTM
G14 PVC-C Cement spigot metric
G15 PVC-C Threaded socket Rp
G16 PVC-C Threaded socket Rp reinforced
G17 PVC-C Threaded socket NPT

Multi-functional module
I01 No multi-functional module
I02 Empty module
I03 Module with 2 limit switches Ag, Ni
I04 Module with 2 limit switches Au
I05 Module with 2 inductive switches Namur
I06 Module with 2 inductive switches PNP
I07 Module with 2 inductive switches NPN

Lever
K01 Standard lever red
K02 Standard lever black
K11 Multi-functional lever red

Mounting plate
L01 without mounting plate
L02 with mounting plate

A01 B05 C09 D01 E01 F02 G30 G41 I01 K02 L02 =

left **right**

Ball valves electric

DN10/15 - 50

Ball valve type 107 PP-H 100-230V
With manual emergency override
With fusion sockets metric

Model:

- Built on with electric actuator EA11
- Voltage 100-230 V, 50-60 Hz
- Control range 90°<)
- Control time 5 s/90°<)
- For easy installation and removal
- Integrated stainless steel mounting inserts

Option:

- Individual configuration of the valve (see form)

d [mm]	DN [mm]	PN	kv-value (Δp=1 bar) [l/min]	EPDM Code	FPM Code	kg
16	10	10	70	**199 107 502**	**199 107 512**	2.100
20	15	10	185	**199 107 503**	**199 107 513**	2.100
25	20	10	350	**199 107 504**	**199 107 514**	2.200
32	25	10	700	**199 107 505**	**199 107 515**	2.300
40	32	10	1000	**199 107 506**	**199 107 516**	2.600
50	40	10	1600	**199 107 507**	**199 107 517**	3.000
63	50	10	3100	**199 107 508**	**199 107 518**	3.800

d [mm]	D [mm]	H [mm]	H1 [mm]	H2 [mm]	H3 [mm]	H5 [mm]	L [mm]	L1 [mm]	L2 [mm]	L4 [mm]	L5 [mm]	L6 [mm]	L7 [mm]	L8 [mm]	z [mm]
16	50	200	27	64	64	137	93	161	56	25	77	83	122	33	67
20	50	200	27	64	64	137	95	161	56	25	77	83	122	33	66
25	58	209	30	73	64	137	108	161	65	25	77	83	122	33	77
32	68	209	36	73	64	137	118	161	71	25	77	83	122	33	83
40	84	220	44	84	64	137	137	161	85	45	77	83	122	33	99
50	97	220	51	84	64	137	147	161	89	45	77	83	122	33	105
63	124	243	64	106	64	137	168	161	101	45	77	83	122	33	117

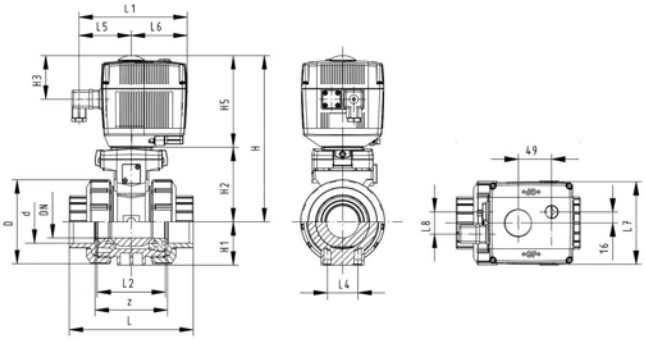

DN10/15 - 50

Ball valve type 107 PP-H 24V
With manual emergency override
With fusion sockets metric

Model:

- Built on with electric actuator EA11
- Voltage 24 V AC/DC
- Control range 90°<)
- Control time 5 s/90°<)
- For easy installation and removal
- Integrated stainless steel mounting inserts

Option:

- Individual configuration of the valve (see form)

d [mm]	DN [mm]	PN	kv-value (Δp=1 bar) [l/min]	EPDM Code	FPM Code	kg
16	10	10	70	**199 107 542**	**199 107 552**	2.100
20	15	10	185	**199 107 543**	**199 107 553**	2.100
25	20	10	350	**199 107 544**	**199 107 554**	2.200
32	25	10	700	**199 107 545**	**199 107 555**	2.300
40	32	10	1000	**199 107 546**	**199 107 556**	2.600
50	40	10	1600	**199 107 547**	**199 107 557**	3.000
63	50	10	3100	**199 107 548**	**199 107 558**	3.800

d [mm]	D [mm]	H [mm]	H1 [mm]	H2 [mm]	H3 [mm]	H5 [mm]	L [mm]	L1 [mm]	L2 [mm]	L4 [mm]	L5 [mm]	L6 [mm]	L7 [mm]	L8 [mm]	z [mm]
16	50	200	27	64	64	137	93	161	56	25	77	83	122	33	67
20	50	200	27	64	64	137	95	161	56	25	77	83	122	33	66
25	58	209	30	73	64	137	108	161	65	25	77	83	122	33	77
32	68	209	36	73	64	137	118	161	71	25	77	83	122	33	83
40	84	220	44	84	64	137	137	161	85	45	77	83	122	33	99
50	97	220	51	84	64	137	147	161	89	45	77	83	122	33	105
63	124	243	64	106	64	137	168	161	101	45	77	83	122	33	117

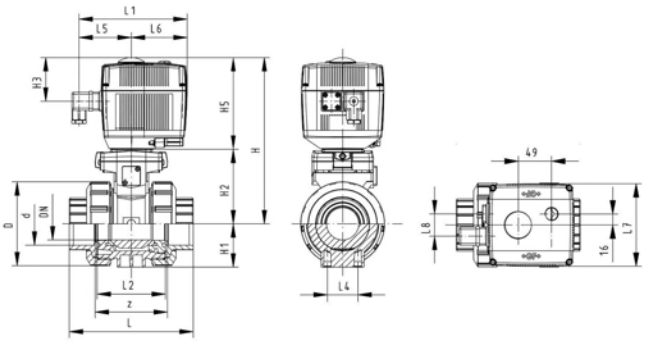

DN10/15 - 50

Ball valve type 107 PP-H 100-230V
With manual emergency override
With fusion spigots metric

Model:

- Built on with electric actuator EA11
- Voltage 100-230 V, 50-60 Hz
- Control range 90°<)
- Control time 5 s/90°<)
- For easy installation and removal
- Integrated stainless steel mounting inserts

Option:

- Individual configuration of the valve (see form)

d [mm]	DN [mm]	PN	kv-value (Δp=1 bar) [l/min]	EPDM Code	FPM Code	kg
16	10	10	70	**199 107 522**	**199 107 532**	2.100
20	15	10	185	**199 107 523**	**199 107 533**	2.100
25	20	10	350	**199 107 524**	**199 107 534**	2.200
32	25	10	700	**199 107 525**	**199 107 535**	2.300
40	32	10	1000	**199 107 526**	**199 107 536**	2.600
50	40	10	1600	**199 107 527**	**199 107 537**	3.000
63	50	10	3100	**199 107 528**	**199 107 538**	3.800

d [mm]	D [mm]	H [mm]	H1 [mm]	H2 [mm]	H3 [mm]	H5 [mm]	L [mm]	L1 [mm]	L2 [mm]	L3 [mm]	L4 [mm]	L5 [mm]	L6 [mm]	L7 [mm]	L8 [mm]
16	50	200	27	64	64	137	110	161	56	130	25	77	83	122	33
20	50	200	27	64	64	137	120	161	56	130	25	77	83	122	33
25	58	209	30	73	64	137	139	161	65	150	25	77	83	122	33
32	68	209	36	73	64	137	150	161	71	160	25	77	83	122	33
40	84	220	44	84	64	137	170	161	85	180	45	77	83	122	33
50	97	220	51	84	64	137	190	161	89	200	45	77	83	122	33
63	124	243	64	106	64	137	220	161	101	230	45	77	83	122	33

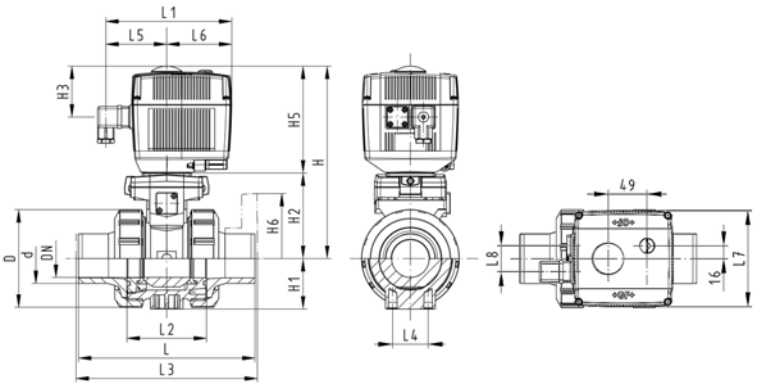

DN10/15 - 50

Ball valve type 107 PP-H 24V
With manual emergency override
With fusion spigots metric

Model:

- Built on with electric actuator EA11
- Voltage 24 V AC/DC
- Control range 90°<)
- Control time 5 s/90°<)
- For easy installation and removal
- Integrated stainless steel mounting inserts

Option:

- Individual configuration of the valve (see form)

d [mm]	DN [mm]	PN	kv-value (Δp=1 bar) [l/min]	EPDM Code	FPM Code	kg
16	10	10	70	**199 107 562**	**199 107 572**	2.100
20	15	10	185	**199 107 563**	**199 107 573**	2.100
25	20	10	350	**199 107 564**	**199 107 574**	2.200
32	25	10	700	**199 107 565**	**199 107 575**	2.300
40	32	10	1000	**199 107 566**	**199 107 576**	2.600
50	40	10	1600	**199 107 567**	**199 107 577**	3.000
63	50	10	3100	**199 107 568**	**199 107 578**	3.800

d [mm]	D [mm]	H [mm]	H1 [mm]	H2 [mm]	H3 [mm]	H5 [mm]	L [mm]	L1 [mm]	L2 [mm]	L3 [mm]	L4 [mm]	L5 [mm]	L6 [mm]	L7 [mm]	L8 [mm]
16	50	200	27	64	64	137	110	161	56	130	25	77	83	122	33
20	50	200	27	64	64	137	120	161	56	130	25	77	83	122	33
25	58	209	30	73	64	137	139	161	65	150	25	77	83	122	33
32	68	209	36	73	64	137	156	161	71	160	25	77	83	122	33
40	84	220	44	84	64	137	170	161	85	180	45	77	83	122	33
50	97	220	51	84	64	137	190	161	89	200	45	77	83	122	33
63	124	243	64	106	64	137	220	161	101	230	45	77	83	122	33

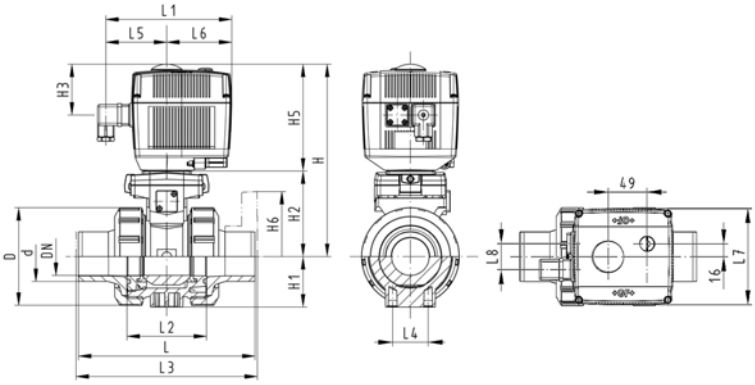

DN10/15 - 50

Ball valve type 107 PP-H 100-230V
With manual emergency override
With fixed flanges PP-H serrated metric

Model:

- Built on with electric actuator EA11
- Voltage 100-230 V, 50-60 Hz
- Control range 90°<)
- Control time 5 s/90°<)
- For easy installation and removal
- Integrated stainless steel mounting inserts
- Overall length according to EN 558-1
- Connecting dimensions: ISO 7005 / EN 1092 / DIN 2501 PN10 / BS4504

Option:

- Individual configuration of the valve (see form)

d [mm]	DN [mm]	Inch	PN	kv-value (Δp=1 bar) [l/min]	EPDM Code	FPM Code	kg
20	15	½	10	185	**199 107 583**	**199 107 593**	2.300
25	20	¾	10	350	**199 107 584**	**199 107 594**	2.500
32	25	1	10	700	**199 107 585**	**199 107 595**	2.700
40	32	1 ¼	10	1000	**199 107 586**	**199 107 596**	3.200
50	40	1 ½	10	1600	**199 107 587**	**199 107 597**	3.700
63	50	2	10	3100	**199 107 588**	**199 107 598**	4.800

d [mm]	D [mm]	H [mm]	H1 [mm]	H2 [mm]	H3 [mm]	H5 [mm]	H6 [mm]	L [mm]	L1 [mm]	L2 [mm]	L3 [mm]	L4 [mm]	L5 [mm]	L6 [mm]	L7 [mm]
20	50	200	27	64	64	137	48	120	161	56	130	25	77	83	122
25	58	209	30	73	64	137	53	140	161	65	150	25	77	83	122
32	68	209	36	73	64	137	58	150	161	71	160	25	77	83	122
40	84	220	44	84	64	137	70	170	161	85	180	45	77	83	122
50	97	220	51	84	64	137	75	190	161	89	200	45	77	83	122
63	124	243	64	106	64	137	165	220	161	101	230	45	77	83	122

d [mm]	L8 [mm]
20	33
25	33
32	33
40	33
50	33
63	33

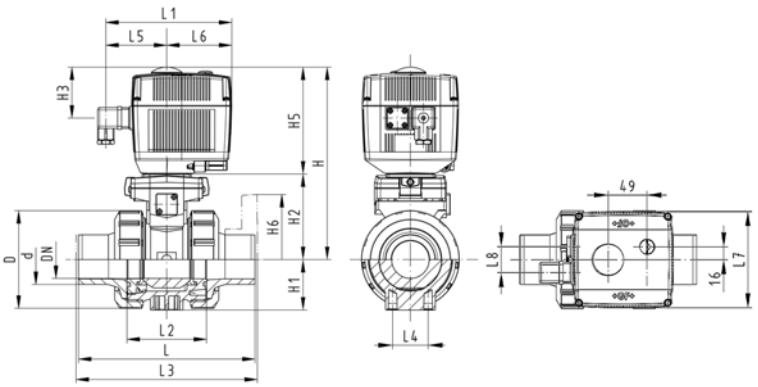

DN10/15 - 50

Ball valve type 107 PP-H 24V
With manual emergency override
With fixed flanges PP-H serrated metric

Model:

- Built on with electric actuator EA11
- Voltage 24 V AC/DC
- Control range 90°<)
- Control time 5 s/90°<)
- For easy installation and removal
- Integrated stainless steel mounting inserts
- Overall length according to EN 558-1
- Connecting dimensions: ISO 7005 / EN 1092 / DIN 2501 PN10 / BS4504

Option:

- Individual configuration of the valve (see form)

d [mm]	DN [mm]	Inch	PN	kv-value (Δp=1 bar) [l/min]	EPDM Code	FPM Code	kg
20	15	½	10	185	**199 107 783**	**199 107 793**	2.300
25	20	¾	10	350	**199 107 784**	**199 107 794**	2.500
32	25	1	10	700	**199 107 785**	**199 107 795**	2.700
40	32	1 ¼	10	1000	**199 107 786**	**199 107 796**	3.200
50	40	1 ½	10	1600	**199 107 787**	**199 107 797**	3.700
63	50	2	10	3100	**199 107 788**	**199 107 798**	4.800

d [mm]	D [mm]	H [mm]	H1 [mm]	H2 [mm]	H3 [mm]	H5 [mm]	H6 [mm]	L [mm]	L1 [mm]	L2 [mm]	L3 [mm]	L4 [mm]	L5 [mm]	L6 [mm]	L7 [mm]
20	50	200	27	64	64	137	48	120	161	56	130	25	77	83	122
25	58	209	30	73	64	137	53	140	161	65	150	25	77	83	122
32	68	209	36	73	64	137	58	150	161	71	160	25	77	83	122
40	84	220	44	84	64	137	70	170	161	85	180	45	77	83	122
50	97	220	51	84	64	137	75	190	161	89	200	45	77	83	122
63	124	243	64	106	64	137	165	220	161	101	230	45	77	83	122

d [mm]	L8 [mm]
20	33
25	33
32	33
40	33
50	33
63	33

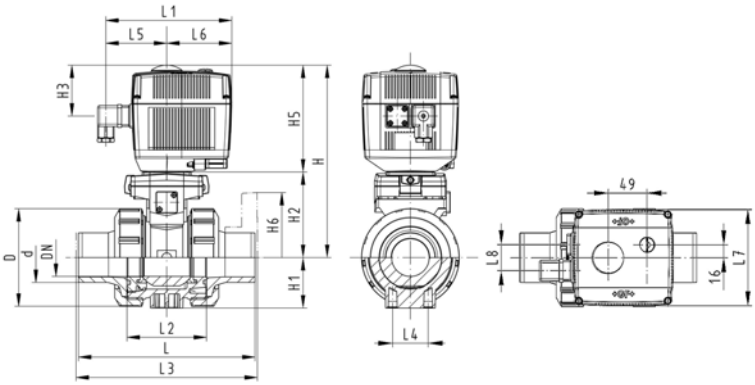

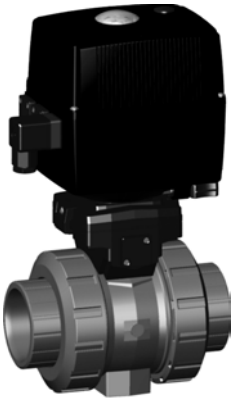

DN10/15 - 50

Ball valve type 131 PP-H 100-230V
With manual emergency override
With fusion sockets metric

Model:

- Assignment of actuators EA21 (DN10/15-50), EA31 (DN65-100 if available)
- Image and drawing DN65-100 please see **New product ball valve DN65-100**
- For easy installation and removal
- Integrated stainless steel mounting inserts
- Voltage 100-230 V, 50-60 Hz
- Control range 90°<)
- Control time: EA21: 5s/90°<), EA31: 15s/90°<)

Option:

- Individual configuration of the valve (see form)

d [mm]	DN [mm]	PN	kv-value (Δp=1 bar) [l/min]	EPDM Code	FPM Code	kg
16	10	10	70	**199 131 002**	**199 131 012**	2.100
20	15	10	185	**199 131 003**	**199 131 013**	2.100
25	20	10	350	**199 131 004**	**199 131 014**	2.200
32	25	10	700	**199 131 005**	**199 131 015**	2.300
40	32	10	1000	**199 131 006**	**199 131 016**	2.600
50	40	10	1600	**199 131 007**	**199 131 017**	3.000
63	50	10	3100	**199 131 008**	**199 131 018**	3.800
New 75	65	10	5000	**199 131 009**	**199 131 019**	3.600
New 90	80	10	7000	**199 131 010**	**199 131 020**	4.300
New 110	100	10	11000	**199 131 011**	**199 131 021**	5.500

d [mm]	D [mm]	H [mm]	H1 [mm]	H2 [mm]	H3 [mm]	H5 [mm]	L [mm]	L1 [mm]	L2 [mm]	L4 [mm]	L5 [mm]	L6 [mm]	L7 [mm]	z [mm]
16	50	231	27	64	94	167	93	180	56	25	97	83	122	67
20	50	231	27	64	94	167	95	180	56	25	97	83	122	66
25	58	240	30	73	94	167	108	180	65	25	97	83	122	77
32	68	240	36	73	94	167	118	180	71	25	97	83	122	83
40	84	251	44	84	94	167	137	180	85	45	97	83	122	99
50	97	251	51	84	94	167	147	180	89	45	97	83	122	105
63	124	273	64	106	94	167	168	180	101	45	97	83	122	117
New 75	166	346	85	156	94	190	233	180	136	70	98	83	122	167
New 90	200	358	105	168	94	190	254	180	141	70	98	83	122	180
New 110	238	365	123	175	94	190	301	180	164	120	98	83	122	215

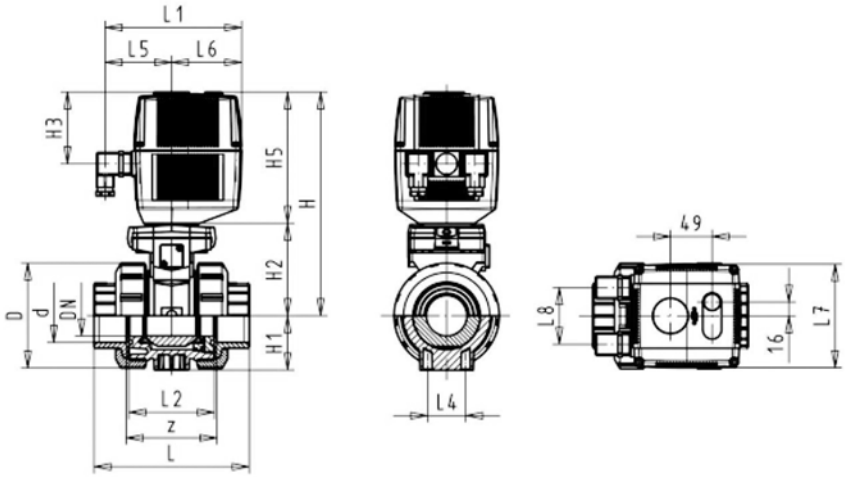

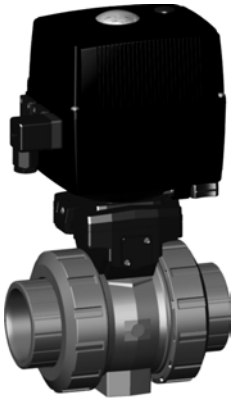

DN10/15 - 50

Ball valve type 131 PP-H 24V
With manual emergency override
With fusion sockets metric

Model:

- Assignment of actuators EA21 (DN10/15-50), EA31 (DN65-100 if available)
- Image and drawing DN65-100 please see **New product ball valve DN65-100**
- For easy installation and removal
- Integrated stainless steel mounting inserts
- Voltage 24 V AC/DC
- Control range 90°<)
- Control time: EA21: 5s/90°<), EA31: 15s/90°<)

Option:

- Individual configuration of the valve (see form)

d [mm]	DN [mm]	PN	kv-value (Δp=1 bar) [l/min]	EPDM Code	FPM Code	kg
16	10	10	70	**199 131 042**	**199 131 052**	2.100
20	15	10	185	**199 131 043**	**199 131 053**	2.100
25	20	10	350	**199 131 044**	**199 131 054**	2.200
32	25	10	700	**199 131 045**	**199 131 055**	2.300
40	32	10	1000	**199 131 046**	**199 131 056**	2.600
50	40	10	1600	**199 131 047**	**199 131 057**	3.000
63	50	10	3100	**199 131 048**	**199 131 058**	3.800
New 75	65	10	5000	**199 131 049**	**199 131 059**	3.600
New 90	80	10	7000	**199 131 050**	**199 131 060**	4.300
New 110	100	10	11000	**199 131 051**	**199 131 061**	5.500

d [mm]	D [mm]	H [mm]	H1 [mm]	H2 [mm]	H3 [mm]	H5 [mm]	L [mm]	L1 [mm]	L2 [mm]	L4 [mm]	L5 [mm]	L6 [mm]	L7 [mm]	z [mm]
16	50	231	27	64	94	167	93	180	56	25	97	83	122	67
20	50	231	27	64	94	167	95	180	56	25	97	83	122	66
25	58	240	30	73	94	167	108	180	65	25	97	83	122	77
32	68	240	36	73	94	167	118	180	71	25	97	83	122	83
40	84	251	44	84	94	167	137	180	85	45	97	83	122	99
50	97	251	51	84	94	167	147	180	89	45	97	83	122	105
63	124	273	64	106	94	167	168	180	101	45	97	83	122	117
New 75	166	346	85	156	94	190	233	180	136	70	98	83	122	167
New 90	200	358	105	168	94	190	254	180	141	70	98	83	122	180
New 110	238	365	123	175	94	190	301	180	164	120	98	83	122	215

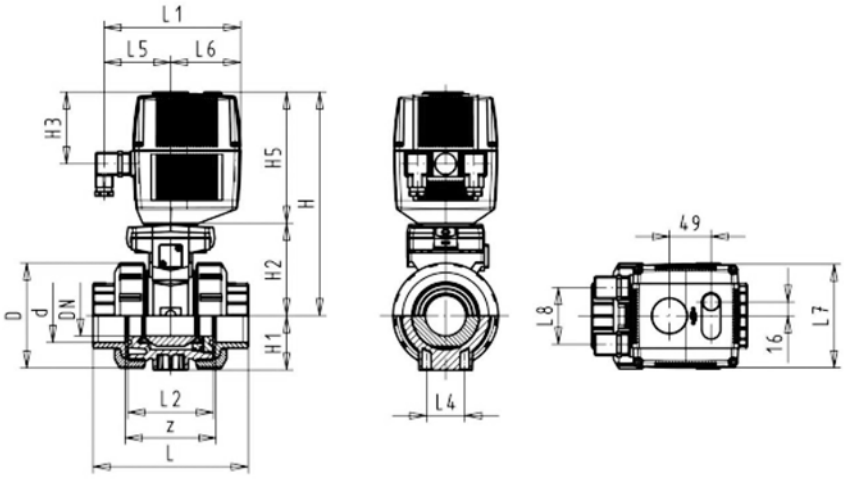

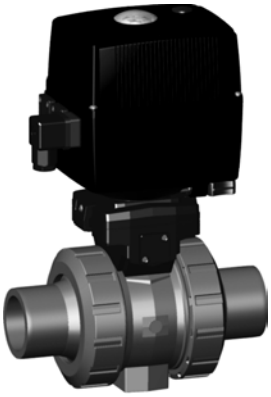

DN10/15 - 50

Ball valve type 131 PP-H 100-230V
With manual emergency override
With socket fusion spigots metric

Model:

- Assignment of actuators EA21 (DN10/15-50), EA31 (DN65-100 if available)
- Image and drawing DN65-100 please see **New product ball valve DN65-100**
- For easy installation and removal
- Integrated stainless steel mounting inserts
- Voltage 100-230 V, 50-60 Hz
- Control range 90°<)
- Control time: EA21: 5s/90°<), EA31: 15s/90°<)

Option:

- Individual configuration of the valve (see form)

d [mm]	DN [mm]	PN	kv-value (Δp=1 bar) [l/min]	EPDM Code	FPM Code	kg
16	10	10	70	**199 131 022**	**199 131 032**	2.100
20	15	10	185	**199 131 023**	**199 131 033**	2.100
25	20	10	350	**199 131 024**	**199 131 034**	2.200
32	25	10	700	**199 131 025**	**199 131 035**	2.300
40	32	10	1000	**199 131 026**	**199 131 036**	2.600
50	40	10	1600	**199 131 027**	**199 131 037**	3.000
63	50	10	3100	**199 131 028**	**199 131 038**	3.800
New 75	65	10	5000	**199 131 029**	**199 131 039**	3.600
New 90	80	10	7000	**199 131 030**	**199 131 040**	4.400
New 110	100	10	11000	**199 131 031**	**199 131 041**	5.500

d [mm]	D [mm]	H [mm]	H1 [mm]	H2 [mm]	H3 [mm]	H5 [mm]	L [mm]	L1 [mm]	L2 [mm]	L3 [mm]	L4 [mm]	L5 [mm]	L6 [mm]	L7 [mm]
16	50	231	27	64	94	167	110	180	56	130	25	97	83	122
20	50	231	27	64	94	167	120	180	56	130	25	97	83	122
25	58	240	30	73	94	167	139	180	65	150	25	97	83	122
32	68	240	36	73	94	167	150	180	71	160	25	97	83	122
40	84	251	44	84	94	167	170	180	85	180	45	97	83	122
50	97	251	51	84	94	167	190	180	89	200	45	97	83	122
63	124	273	64	106	94	167	220	180	101	230	45	97	83	122
New 75	166	346	85	156	94	190	280	180	136	290	70	98	83	122
New 90	200	358	105	168	94	190	296	180	141	310	70	98	83	122
New 110	238	365	123	175	94	190	336	180	164	350	120	98	83	122

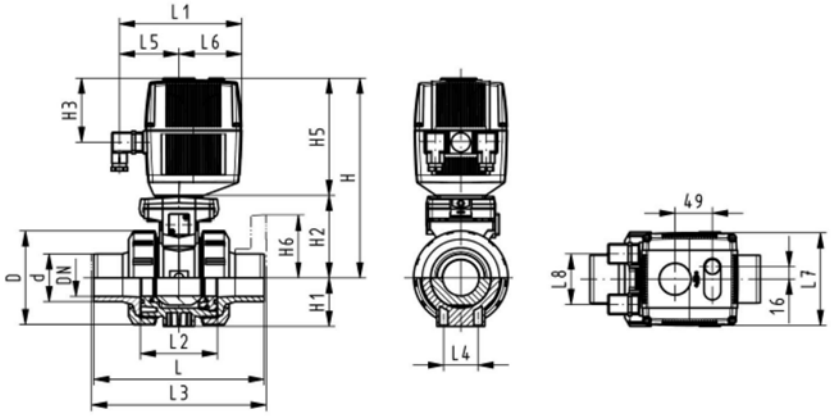

DN10/15 - 50

Ball valve type 131 PP-H 24V
With manual emergency override
With socket fusion spigots metric

Model:

- Assignment of actuators EA21 (DN10/15-50), EA31 (DN65-100 if available)
- Image and drawing DN65-100 please see **New product ball valve DN65-100**
- For easy installation and removal
- Integrated stainless steel mounting inserts
- Voltage 24 V AC/DC
- Control range 90°<)
- Control time: EA21: 5s/90°<), EA31: 15s/90°<)

Option:

- Individual configuration of the valve (see form)

d [mm]	DN [mm]	PN	kv-value (Δp=1 bar) [l/min]	EPDM Code	FPM Code	kg
16	10	10	70	**199 131 062**	**199 131 072**	2.100
20	15	10	185	**199 131 063**	**199 131 073**	2.100
25	20	10	350	**199 131 064**	**199 131 074**	2.200
32	25	10	700	**199 131 065**	**199 131 075**	2.300
40	32	10	1000	**199 131 066**	**199 131 076**	2.600
50	40	10	1600	**199 131 067**	**199 131 077**	3.000
63	50	10	3100	**199 131 068**	**199 131 078**	3.800
New 75	65	10	5000	**199 131 069**	**199 131 079**	3.600
New 90	80	10	7000	**199 131 070**	**199 131 080**	4.400
New 110	100	10	11000	**199 131 071**	**199 131 081**	5.500

d [mm]	D [mm]	H [mm]	H1 [mm]	H2 [mm]	H3 [mm]	H5 [mm]	L [mm]	L1 [mm]	L2 [mm]	L3 [mm]	L4 [mm]	L5 [mm]	L6 [mm]	L7 [mm]
16	50	231	27	64	94	167	110	180	56	130	25	97	83	122
20	50	231	27	64	94	167	120	180	56	130	25	97	83	122
25	58	240	30	73	94	167	139	180	65	150	25	97	83	122
32	68	240	36	73	94	167	150	180	71	160	25	97	83	122
40	84	251	44	84	94	167	170	180	85	180	45	97	83	122
50	97	251	51	84	94	167	190	180	89	200	45	97	83	122
63	124	273	64	106	94	167	220	180	101	230	45	97	83	122
New 75	166	346	85	156	94	190	280	180	136	290	70	98	83	122
New 90	200	358	105	168	94	190	296	180	141	310	70	98	83	122
New 110	238	365	123	175	94	190	336	180	164	350	120	98	83	122

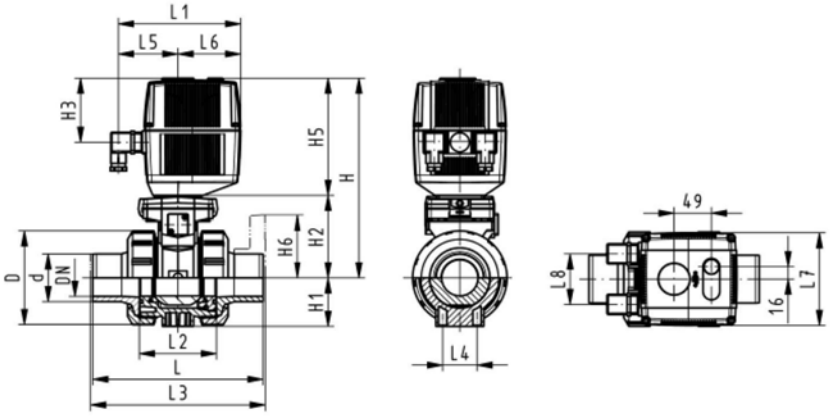

DN10/15 - 50

Ball valve type 131 PP-H 100-230V
With manual emergency override
With fixed flanges PP-H serrated metric

Model:

- Assignment of actuators EA21 (DN10/15-50), EA31 (DN65-100 if available)
- Image and drawing DN65-100 please see **New product ball valve DN65-100**
- For easy installation and removal
- Integrated stainless steel mounting inserts
- Voltage 100-230 V, 50-60 Hz
- Control range 90°<)
- Control time: EA21: 5s/90°<), EA31: 15s/90°<)
- Overall length according to EN 558-1
- Connecting dimensions: ISO 7005 / EN 1092 / DIN 2501 PN10 / BS4504

Option:

- Individual configuration of the valve (see form)

d [mm]	DN [mm]	Inch	PN	kv-value (Δp=1 bar) [l/min]	EPDM Code	FPM Code	kg
20	15	½	10	185	**199 131 083**	**199 131 093**	2.300
25	20	¾	10	350	**199 131 084**	**199 131 094**	2.500
32	25	1	10	700	**199 131 085**	**199 131 095**	2.700
40	32	1 ¼	10	1000	**199 131 086**	**199 131 096**	3.200
50	40	1 ½	10	1600	**199 131 087**	**199 131 097**	3.700
63	50	2	10	3100	**199 131 088**	**199 131 098**	4.800

d [mm]	D [mm]	H [mm]	H1 [mm]	H2 [mm]	H3 [mm]	H5 [mm]	H6 [mm]	L [mm]	L1 [mm]	L2 [mm]	L3 [mm]	L4 [mm]	L5 [mm]	L6 [mm]	L7 [mm]
20	50	231	27	64	94	167	48	120	180	56	130	25	97	83	122
25	58	240	30	73	94	167	53	140	180	65	150	25	97	83	122
32	68	240	36	73	94	167	58	150	180	71	160	25	97	83	122
40	84	251	44	84	94	167	70	170	180	85	180	45	97	83	122
50	97	251	51	84	94	167	75	190	180	89	200	45	97	83	122
63	124	273	64	106	94	167	165	220	180	101	230	45	97	83	122

d [mm]	L8 [mm]
20	66
25	66
32	66
40	66
50	66
63	66

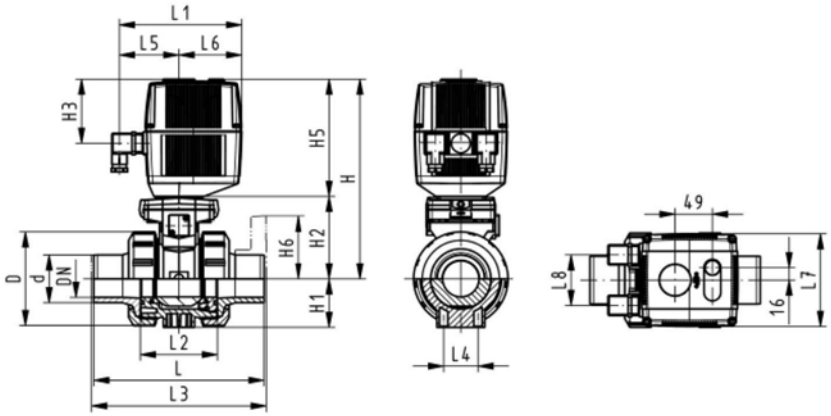

DN10/15 - 50

Ball valve type 131 PP-H 24V
With manual emergency override
With fixed flanges PP-H serrated metric

Model:

- Assignment of actuators EA21 (DN10/15-50), EA31 (DN65-100 if available)
- Image and drawing DN65-100 please see **New product ball valve DN65-100**
- For easy installation and removal
- Integrated stainless steel mounting inserts
- Voltage 24 V AC/DC
- Control range 90°<)
- Control time: EA21: 5s/90°<), EA31: 15s/90°<)
- Overall length according to EN 558-1
- Connecting dimensions: ISO 7005 / EN 1092 / DIN 2501 PN10 / BS4504

Option:

- Individual configuration of the valve (see form)

d [mm]	DN [mm]	Inch	PN	kv-value (Δp=1 bar) [l/min]	EPDM Code	FPM Code	kg
20	15	½	10	185	**199 131 103**	**199 131 113**	2.300
25	20	¾	10	350	**199 131 104**	**199 131 114**	2.500
32	25	1	10	700	**199 131 105**	**199 131 115**	2.700
40	32	1 ¼	10	1000	**199 131 106**	**199 131 116**	3.200
50	40	1 ½	10	1600	**199 131 107**	**199 131 117**	3.700
63	50	2	10	3100	**199 131 108**	**199 131 118**	4.800

d [mm]	D [mm]	H [mm]	H1 [mm]	H2 [mm]	H3 [mm]	H5 [mm]	H6 [mm]	L [mm]	L1 [mm]	L2 [mm]	L3 [mm]	L4 [mm]	L5 [mm]	L6 [mm]	L7 [mm]
20	50	231	27	64	94	167	48	120	180	56	130	25	97	83	122
25	58	240	30	73	94	167	53	140	180	65	150	25	97	83	122
32	68	240	36	73	94	167	58	150	180	71	160	25	97	83	122
40	84	251	44	84	94	167	70	170	180	85	180	45	97	83	122
50	97	251	51	84	94	167	75	190	180	89	200	45	97	83	122
63	124	273	64	106	94	167	165	220	180	101	230	45	97	83	122

d [mm]	L8 [mm]
20	66
25	66
32	66
40	66
50	66
63	66

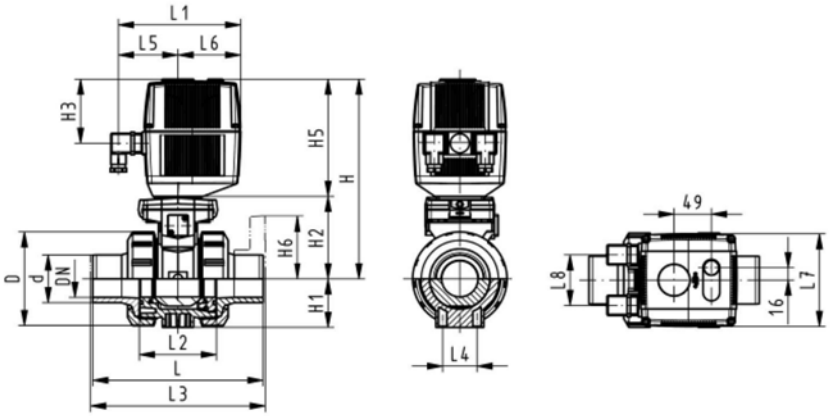

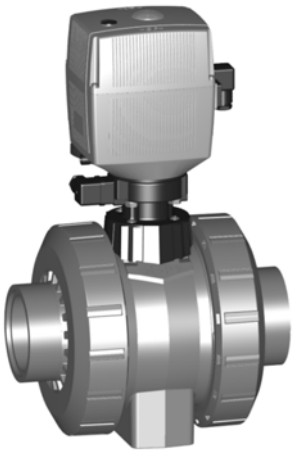

Ball valve type 131 PP-H 100-230V
With manual emergency override
With butt fusion spigots SDR11 metric

Model:

- Assignment of actuators EA21 (DN10/15-50), EA31 (DN65-100 if available)
- Image and drawing DN65-100 please see **New product ball valve DN65-100**
- For easy installation and removal
- Integrated stainless steel mounting inserts
- Voltage 100-230 V, 50-60 Hz
- Control range 90°<)
- Control time: EA21: 5s/90°<), EA31: 15s/90°<)

Option:

- Individual configuration of the valve (see form)

d [mm]	DN [mm]	PN	kv-value (Δp=1 bar) [l/min]	EPDM Code	FPM Code	kg
New 75	65	10	5000	**199 131 329**	**199 131 339**	3.600
New 90	80	10	7000	**199 131 330**	**199 131 340**	4.400
New 110	100	10	11000	**199 131 331**	**199 131 341**	5.500

d [mm]	D [mm]	H [mm]	H1 [mm]	H2 [mm]	H3 [mm]	H5 [mm]	L [mm]	L1 [mm]	L2 [mm]	L3 [mm]	L4 [mm]	L5 [mm]	L6 [mm]	L7 [mm]
New 75	166	346	85	156	94	190	266	180	136	290	70	98	83	122
New 90	200	358	105	168	94	190	264	180	141	310	70	98	83	122
New 110	238	365	123	175	94	190	301	180	164	350	120	98	83	122

d [mm]	e [mm]
New 75	8.2
New 90	9.9
New 110	12.0

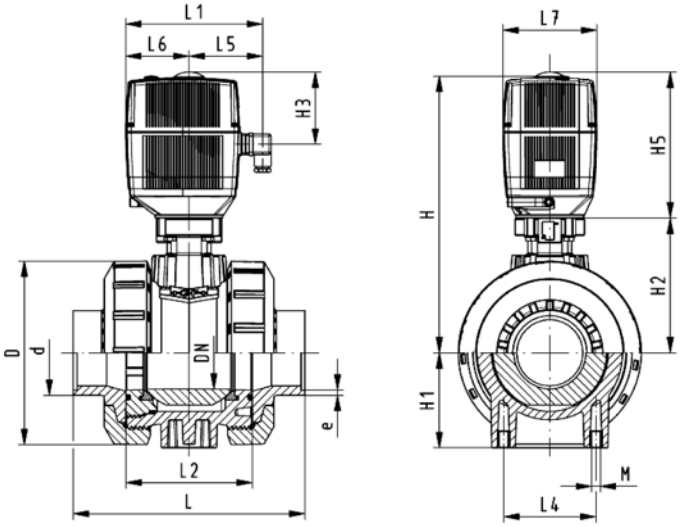

Ball valve type 131 PP-H 24V
With manual emergency override
With butt fusion spigots SDR11 metric

Model:

- Assignment of actuators EA21 (DN10/15-50), EA31 (DN65-100 if available)
- Image and drawing DN65-100 please see **New product ball valve DN65-100**
- For easy installation and removal
- Integrated stainless steel mounting inserts
- Voltage 24 V AC/DC
- Control range 90°<)
- Control time: EA21: 5s/90°<), EA31: 15s/90°<)

Option:

- Individual configuration of the valve (see form)

d [mm]	DN [mm]	PN	kv-value (Δp=1 bar) [l/min]	EPDM Code	FPM Code	kg
New 75	65	10	5000	**199 131 369**	**199 131 379**	3.600
New 90	80	10	7000	**199 131 370**	**199 131 380**	4.400
New 110	100	10	11000	**199 131 371**	**199 131 381**	5.500

d [mm]	D [mm]	H [mm]	H1 [mm]	H2 [mm]	H3 [mm]	H5 [mm]	L [mm]	L1 [mm]	L2 [mm]	L3 [mm]	L4 [mm]	L5 [mm]	L6 [mm]	L7 [mm]
New 75	166	346	85	156	94	190	266	180	136	290	70	98	83	122
New 90	200	358	105	168	94	190	264	180	141	310	70	98	83	122
New 110	238	365	123	175	94	190	301	180	164	350	120	98	83	122

d [mm]	e [mm]
New 75	8.2
New 90	9.9
New 110	12.0

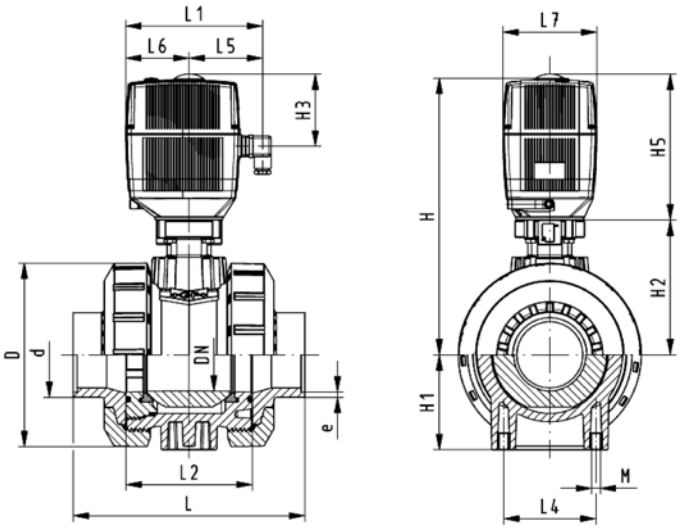

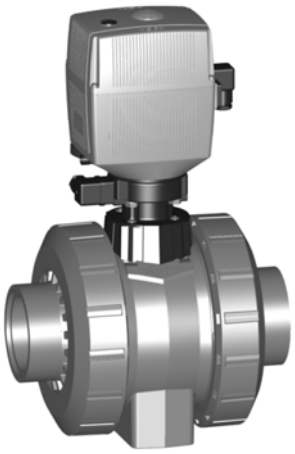

Ball valve type 131 PP-H 100-230V
With manual emergency override
With butt fusion spigots SDR17.6 metric

Model:

- Assignment of actuators EA21 (DN10/15-50), EA31 (DN65-100 if available)
- Image and drawing DN65-100 please see **New product ball valve DN65-100**
- For easy installation and removal
- Integrated stainless steel mounting inserts
- Voltage 100-230 V, 50-60 Hz
- Control range 90°<)
- Control time: EA21: 5s/90°<), EA31: 15s/90°<)

Option:

- Individual configuration of the valve (see form)

d [mm]	DN [mm]	PN	kv-value (Δp=1 bar) [l/min]	EPDM Code	FPM Code	kg
New 75	65	10	5000	**199 131 729**	**199 131 739**	3.600
New 90	80	10	7000	**199 131 730**	**199 131 740**	4.400
New 110	100	10	11000	**199 131 731**	**199 131 741**	5.500

d [mm]	D [mm]	H [mm]	H1 [mm]	H2 [mm]	H3 [mm]	H5 [mm]	L [mm]	L1 [mm]	L2 [mm]	L3 [mm]	L4 [mm]	L5 [mm]	L6 [mm]	L7 [mm]
New 75	166	346	85	156	94	190	266	180	136	290	70	98	83	122
New 90	200	358	105	168	94	190	264	180	141	310	70	98	83	122
New 110	238	365	123	175	94	190	301	180	164	350	120	98	83	122

d [mm]	e [mm]
New 75	4.6
New 90	5.5
New 110	6.7

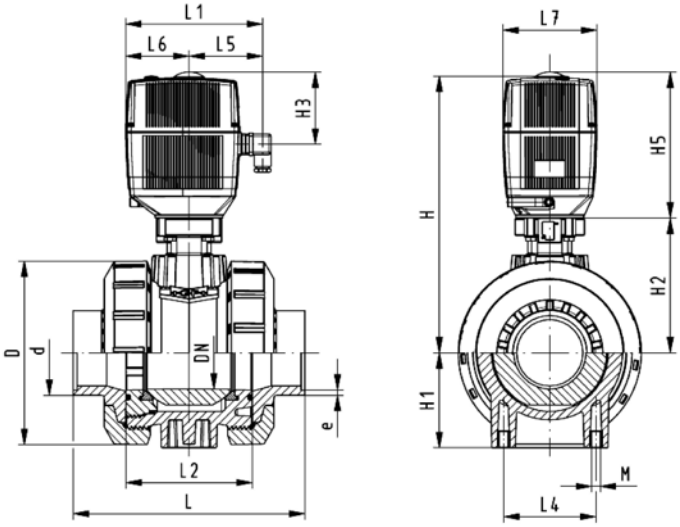

Ball valve type 131 PP-H 24V
With manual emergency override
With butt fusion spigots SDR17.6 metric

Model:

- Assignment of actuators EA21 (DN10/15-50), EA31 (DN65-100 if available)
- Image and drawing DN65-100 please see **New product ball valve DN65-100**
- For easy installation and removal
- Integrated stainless steel mounting inserts
- Voltage 24 V AC/DC
- Control range 90°<)
- Control time: EA21: 5s/90°<), EA31: 15s/90°<)

Option:

- Individual configuration of the valve (see form)

d [mm]	DN [mm]	PN	kv-value (Δp=1 bar) [l/min]	EPDM Code	FPM Code	kg
New 75	65	10	5000	**199 131 769**	**199 131 779**	3.600
New 90	80	10	7000	**199 131 770**	**199 131 780**	4.400
New 110	100	10	11000	**199 131 771**	**199 131 781**	5.500

d [mm]	D [mm]	H [mm]	H1 [mm]	H2 [mm]	H3 [mm]	H5 [mm]	L [mm]	L1 [mm]	L2 [mm]	L3 [mm]	L4 [mm]	L5 [mm]	L6 [mm]	L7 [mm]
New 75	166	346	85	156	94	190	266	180	136	290	70	98	83	122
New 90	200	358	105	168	94	190	264	180	141	310	70	98	83	122
New 110	238	365	123	175	94	190	301	180	164	350	120	98	83	122

d [mm]	e [mm]
New 75	4.6
New 90	5.5
New 110	6.7

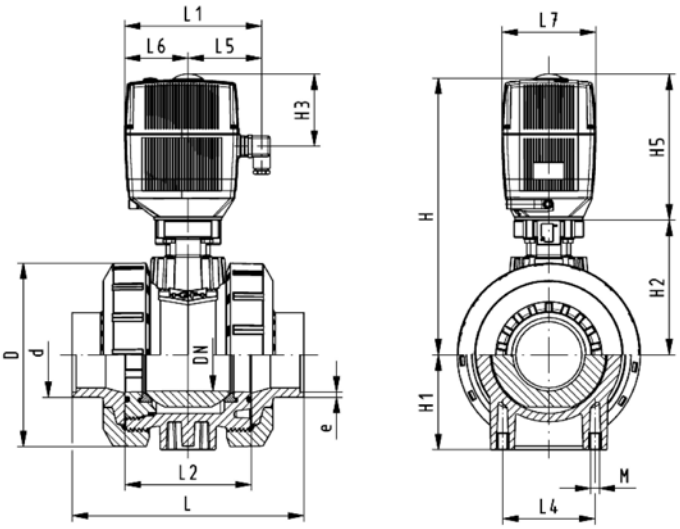

Ball valve type 131 PP-H 100-230V
With manual emergency override
With backing flanges PP-st metric

Model:

- Assignment of actuators EA21 (DN10/15-50), EA31 (DN65-100 if available)
- Image and drawing DN65-100 please see **New product ball valve DN65-100**
- For easy installation and removal
- Integrated stainless steel mounting inserts
- Voltage 100-230 V, 50-60 Hz
- Control range 90°<)
- Control time: EA21: 5s/90°<), EA31: 15s/90°<)
- Overall length according to EN 558-1
- Connecting dimensions: ISO 7005, EN 1092, BS 4504, DIN 2501; bolt circle PN 10

Option:

- Individual configuration of the valve (see form)

d [mm]	DN [mm]	Inch	PN	kv-value (Δp=1 bar) [l/min]	EPDM Code	FPM Code	kg
New 75	65	2 ½	10	5000	**199 131 129**	**199 131 139**	7.900
New 90	80	3	10	7000	**199 131 130**	**199 131 140**	9.600
New 110	100	4	10	11000	**199 131 131**	**199 131 141**	12.700

d [mm]	D [mm]	H [mm]	H1 [mm]	H2 [mm]	H3 [mm]	H5 [mm]	H6 [mm]	L [mm]	L1 [mm]	L2 [mm]	L3 [mm]	L4 [mm]	L5 [mm]	L6 [mm]
New 75	166	346	85	156	94	190	93	280	180	136	290	70	98	83
New 90	200	358	105	168	94	190	100	296	180	141	310	70	98	83
New 110	238	365	123	175	94	190	110	336	180	164	350	120	98	83

d [mm]	L7 [mm]	L8 [mm]
New 75	122	66
New 90	122	66
New 110	122	66

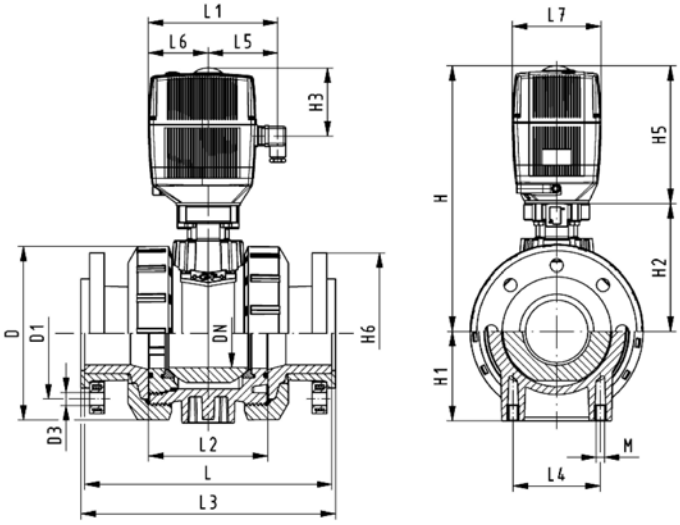

Ball valve type 131 PP-H 24V
With manual emergency override
With backing flanges PP-st metric

Model:

- Assignment of actuators EA21 (DN10/15-50), EA31 (DN65-100 if available)
- Image and drawing DN65-100 please see **New product ball valve DN65-100**
- For easy installation and removal
- Integrated stainless steel mounting inserts
- Voltage 24 V AC/DC
- Control range 90°<)
- Control time: EA21: 5s/90°<), EA31: 15s/90°<)
- Overall length according to EN 558-1
- Connecting dimensions: ISO 7005, EN 1092, BS 4504, DIN 2501; bolt circle PN 10

Option:

- Individual configuration of the valve (see form)

d [mm]	DN [mm]	Inch	PN	kv-value (Δp=1 bar) [l/min]	EPDM Code	FPM Code	kg
New 75	65	2 ½	10	5000	**199 131 149**	**199 131 159**	7.900
New 90	80	3	10	7000	**199 131 150**	**199 131 160**	9.600
New 110	100	4	10	11000	**199 131 151**	**199 131 161**	12.700

d [mm]	D [mm]	H [mm]	H1 [mm]	H2 [mm]	H3 [mm]	H5 [mm]	H6 [mm]	L [mm]	L1 [mm]	L2 [mm]	L3 [mm]	L4 [mm]	L5 [mm]	L6 [mm]
New 75	166	346	85	156	94	190	93	280	180	136	290	70	98	83
New 90	200	358	105	168	94	190	100	296	180	141	310	70	98	83
New 110	238	365	123	175	94	190	110	336	180	164	350	120	98	83

d [mm]	L7 [mm]	L8 [mm]
New 75	122	66
New 90	122	66
New 110	122	66

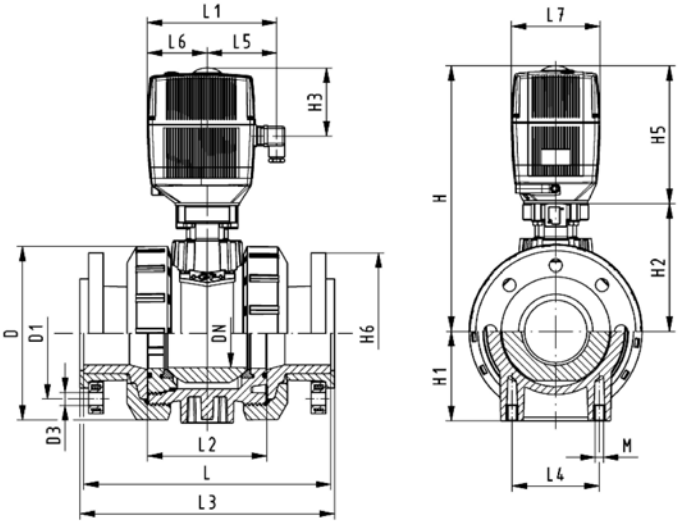

Ball valve type 131 PP-H 100-230V
With manual emergency override
With backing flanges PP-st ASTM

Model:

- Assignment of actuators EA21 (DN10/15-50), EA31 (DN65-100 if available)
- Image and drawing DN65-100 please see **New product ball valve DN65-100**
- For easy installation and removal
- Control time 5 s/90°<)
- Integrated stainless steel mounting inserts
- Voltage 100-230 V, 50-60 Hz
- Control range 90°<)
- Control time: EA21: 5s/90°<), EA31: 15s/90°<)
- Overall length according to EN 558-1
- Connecting dimension ANSI/ASME B 16.5 / ASTM D 4024

Option:

- Individual configuration of the valve (see form)

d [mm]	DN [mm]	Inch	PN	kv-value (Δp=1 bar) [l/min]	EPDM Code	FPM Code	kg
New 75	65	2 ½	10	5000	**199 131 529**	**199 131 539**	7.900
New 90	80	3	10	7000	**199 131 530**	**199 131 540**	9.600
New 110	100	4	10	11000	**199 131 531**	**199 131 541**	12.700

d [mm]	D [mm]	H [mm]	H1 [mm]	H2 [mm]	H3 [mm]	H5 [mm]	H6 [mm]	L [mm]	L1 [mm]	L2 [mm]	L3 [mm]	L4 [mm]	L5 [mm]	L6 [mm]
New 75	166	346	85	156	94	190	93	280	180	136	290	70	98	83
New 90	200	358	105	168	94	190	100	296	180	141	310	70	98	83
New 110	238	365	123	175	94	190	110	336	180	164	350	120	98	83

d [mm]	L7 [mm]	L8 [mm]
New 75	122	66
New 90	122	66
New 110	122	66

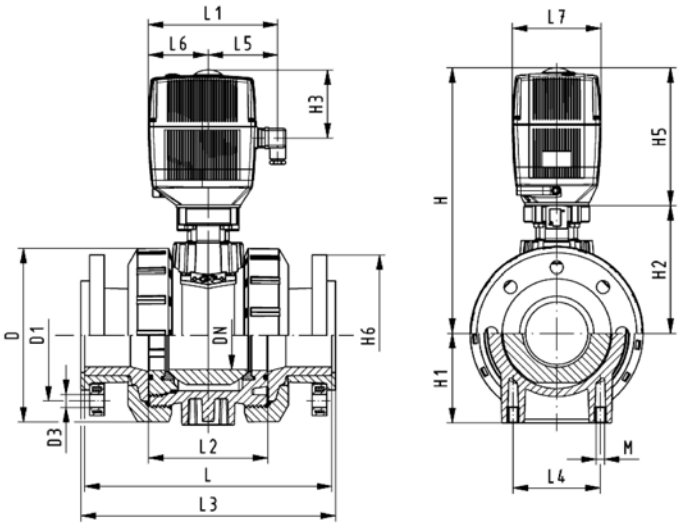

Ball valve type 131 PP-H 24V
With manual emergency override
With backing flanges PP-st ASTM

Model:

- Assignment of actuators EA21 (DN10/15-50), EA31 (DN65-100 if available)
- Image and drawing DN65-100 please see **New product ball valve DN65-100**
- For easy installation and removal
- Integrated stainless steel mounting inserts
- Voltage 24 V AC/DC
- Control range 90°<)
- Control time: EA21: 5s/90°<), EA31: 15s/90°<)
- Overall length according to EN 558-1
- Connecting dimension ANSI/ASME B 16.5 / ASTM D 4024

Option:

- Individual configuration of the valve (see form)

d [mm]	DN [mm]	Inch	PN	kv-value (Δp=1 bar) [l/min]	EPDM Code	FPM Code	kg
New 75	65	2 ½	10	5000	**199 131 549**	**199 131 559**	7.900
New 90	80	3	10	7000	**199 131 550**	**199 131 560**	9.600
New 110	100	4	10	11000	**199 131 551**	**199 131 561**	12.700

d [mm]	D [mm]	H [mm]	H1 [mm]	H2 [mm]	H3 [mm]	H5 [mm]	H6 [mm]	L [mm]	L1 [mm]	L2 [mm]	L3 [mm]	L4 [mm]	L5 [mm]	L6 [mm]
New 75	166	346	85	156	94	190	93	280	180	136	290	70	98	83
New 90	200	358	105	168	94	190	100	296	180	141	310	70	98	83
New 110	238	365	123	175	94	190	110	336	180	164	350	120	98	83

d [mm]	L7 [mm]	L8 [mm]
New 75	122	66
New 90	122	66
New 110	122	66

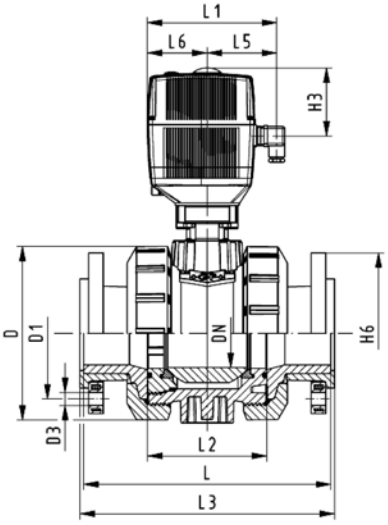

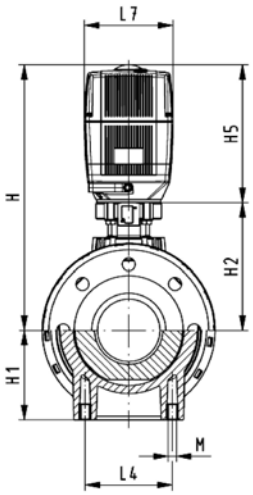

Copiable
Configurator GF ball valve type 546 PP-H

You will find a large selection of different versions in our range of products. New system elements also provide you with new opportunities for use. In order for us to supply exactly the ball valve you need for you application, we have created a selection menu for you.
(The maximum nominal pressure for the ball valve is PN10).
We supply what you put together.

Ball Valve
A01 Ball Valve 546
A02 Linear Ball Valve

Material
B05 PP-H

Dimension

C05	d 16	DN 10	3/8"
C06	d 20	DN 15	1/2"
C07	d 25	DN 20	3/4"
C08	d 32	DN 25	1"
C09	d 40	DN 32	1 1/4"
C10	d 50	DN 40	1 1/2"
C11	d 63	DN 50	2"
C12	d 75	DN 65	2 1/2"
C13	d 90	DN 80	3"
C14	d 110	DN 100	4"
C15	d 160	DN 150	6"

Version
D01 Standard, PTFE ball seal
D02 oilfree, PTFE ball seal (only with specific connecting parts)
D03 silicon-free, PTFE ball seal (only with specific connecting parts)
D04 silicon-free, PVDF ball seal for metric (only with specific connecting parts)

Seals
E01 EPDM seals
E02 FPM seals
E03 FFPM (KALREZ©) seals

Threaded inserts
F01 without threaded inserts
F02 with threaded inserts

Connecting parts
G30 PP-H Fusion socket metric
G32 PP-H Socket fusion spigot metric
G33 PP-H Threaded socket Rp reinforced
G34 PP-H Threaded socket NPT reinforced
G35 PP-H Butt fusion spigot SDR 11 metric IR-PLUS©
G36 PP-H Butt fusion spigot SDR 17.6 metric
with this valve end the maximum nominal pressure is reduced to PN 6
G37 PP-H Butt fusion spigot long SDR11 metric
G83 PP-H Valve end blank
G44 PE-100 Butt fusion spigot long SDR17.6 metric (DN65-100)
G63 Fixed flange PP-H serrated metric (DN10-50)
G72 Backing flange PP-steel metric
G73 Backing flange PP-steel inch ANSI
G77 Backing flange PP JIS with connecting parts
G78 Backing flange PP-GF JIS
G40 PE-100 Fusion socket metric
G41 PE-100 Butt fusion spigot SDR11 metric
G42 PE-100 Butt fusion spigot SDR17.6 metric
G43 PE-100 Butt fusion spigot long SDR11 metric

Multi-functional module
I01 No multi-functional module
I02 Empty module
I03 Module with 2 end switches Ag, Ni
I04 Module with 2 end switches Au
I05 Module with 2 inductive switches Namur
I06 Module with 2 inductive switches PNP
I07 Module with 2 inductive switches NPN

Lever
K01 Standard lever red
K02 Standard lever black
K11 Multi-functional lever red

Mounting plate
L01 without mounting plate
L02 with mounting plate

A01	B05	C	D	E	F	G	G	I	K	L
						left	right			

+GF+

Copiable
GF ball valve type 546 with electric Actuator

It's easy to actuate the type 546:
With the configurator, you have a choice of new electric actuators, the EA11 for standard applications and the EA21 with modular design and accessories, for practically and type of operation.

We supply what you put together.

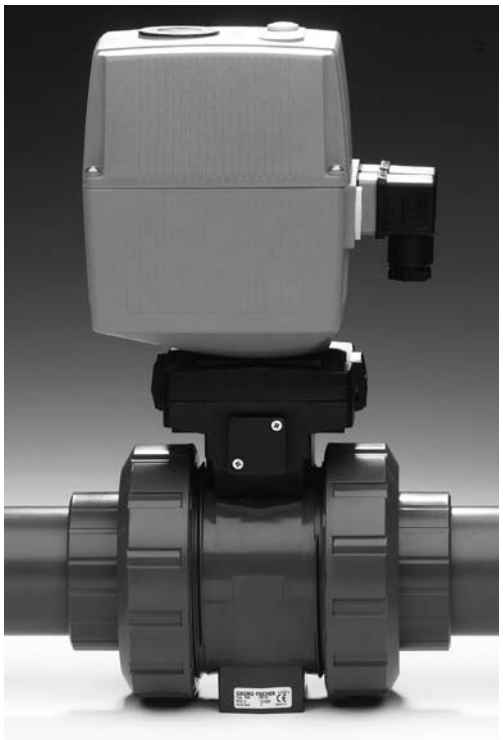

Electric Actuator EA11
T01 EA11 24 V
T02 EA11 100–230 V

Accessories EA11
U01 No accessories
U02 2 limit switches Ag, Ni
U03 Heating element
U04 Fail-safe return
U05 2 limit switches Ag, Ni normally open

Electric Actuator EA21/31
T03 EA21/31 24 V
T04 EA21/31 100–230 V

Accessories EA21
W01 No accessories
W02 Heating element
W03 Cycle time module
W04 Cycle time monitoring
W05 Cycles monitoring
W06 Motor current monitoring
W07 2 limit switches Ag, Ni
W08 2 limit switches Gold
W09 2 limit switches NPN
W10 2 limit switches PNP
W11 Positioner
W12 Electric position indicator
W14 Fail-safe return unit
W15 Switch intermediate position
W27 2 limit switches Ag, Ni normally open with connector
W31 Positioner PE25 with galv. separation

T	U	T	W	W	W	W	W	W

Ball valves pneumatic

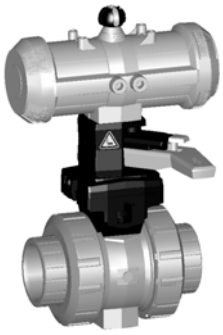

DN10/15 - 50

Ball valve type 231 PP-H FC (Fail safe to close)
With manual override
With fusion sockets metric

Model:

- Built on with pneumatic actuator PA11/21
- Control time 90°<) 1-2 s
- For easy installation and removal
- Integrated stainless steel mounting inserts

Option:

- Individual configuration of the valve (see form)

d [mm]	DN [mm]	PN	kv-value (Δp=1 bar) [l/min]	EPDM Code	FPM Code	kg
16	10	10	70	**199 231 002**	**199 231 012**	1.500
20	15	10	185	**199 231 003**	**199 231 013**	1.500
25	20	10	350	**199 231 004**	**199 231 014**	1.600
32	25	10	700	**199 231 005**	**199 231 015**	1.700
40	32	10	1000	**199 231 006**	**199 231 016**	2.800
50	40	10	1600	**199 231 007**	**199 231 017**	3.100
63	50	10	3100	**199 231 008**	**199 231 018**	4.000

d [mm]	D [mm]	H [mm]	H1 [mm]	H2 [mm]	H3 [mm]	H4 [mm]	H5 [mm]	L [mm]	L1 [mm]	L2 [mm]	L4 [mm]	L5 [mm]	L6 [mm]	L7 [mm]	z [mm]
16	50	230	27	62	168	40	97	93	194	56	25	261	76	48	67
20	50	230	27	62	168	40	97	95	194	56	25	261	76	48	66
25	58	239	30	71	168	40	97	108	194	65	25	261	76	48	77
32	68	239	36	71	168	40	97	118	194	71	25	261	76	48	83
40	84	271	44	84	187	51	115	137	224	85	45	305	95	59	99
50	97	271	51	84	187	51	115	147	224	89	45	305	95	59	105
63	124	293	64	106	187	51	115	168	224	101	45	305	95	59	117

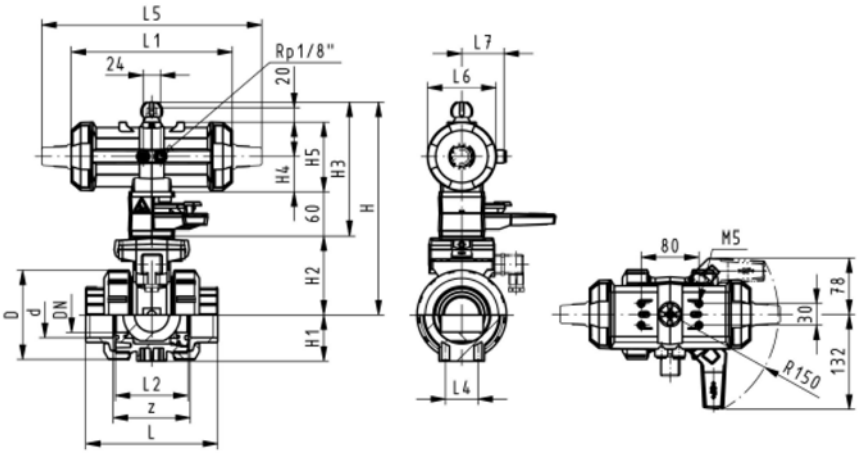

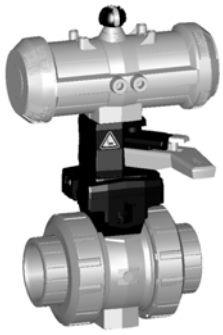

DN10/15 - 50

Ball valve type 231 PP-H FO (Fail safe to open)
With manual override
With fusion sockets metric

Model:

- Built on with pneumatic actuator PA11/21
- Control time 90°<) 1-2 s
- For easy installation and removal
- Integrated stainless steel mounting inserts

Option:

- Individual configuration of the valve (see form)

d [mm]	DN [mm]	PN	kv-value (Δp=1 bar) [l/min]	EPDM Code	FPM Code	kg
16	10	10	70	**199 231 042**	**199 231 052**	1.500
20	15	10	185	**199 231 043**	**199 231 053**	1.500
25	20	10	350	**199 231 044**	**199 231 054**	1.600
32	25	10	700	**199 231 045**	**199 231 055**	1.700
40	32	10	1000	**199 231 046**	**199 231 056**	2.800
50	40	10	1600	**199 231 047**	**199 231 057**	3.100
63	50	10	3100	**199 231 048**	**199 231 058**	4.000

d [mm]	D [mm]	H [mm]	H1 [mm]	H2 [mm]	H3 [mm]	H4 [mm]	H5 [mm]	L [mm]	L1 [mm]	L2 [mm]	L4 [mm]	L5 [mm]	L6 [mm]	L7 [mm]	z [mm]
16	50	230	27	62	168	40	97	93	194	56	25	261	76	48	67
20	50	230	27	62	168	40	97	95	194	56	25	261	76	48	66
25	58	239	30	71	168	40	97	108	194	65	25	261	76	48	77
32	68	239	36	71	168	40	97	118	194	71	25	261	76	48	83
40	84	271	44	84	187	51	115	137	224	85	45	305	95	59	99
50	97	271	51	84	187	51	115	147	224	89	45	305	95	59	105
63	124	293	64	106	187	51	115	168	224	101	45	305	95	59	117

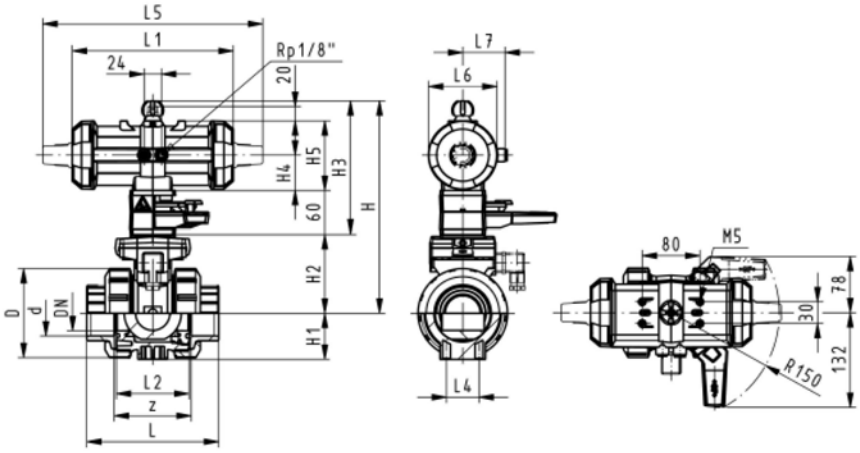

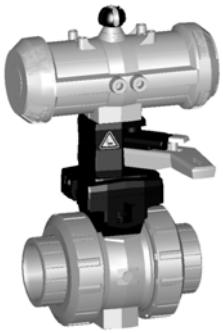

DN10/15 - 50

Ball valve type 231 PP-H DA (Double acting)
With manual override
With fusion sockets metric

Model:

- Built on with pneumatic actuator PA11/21
- Control time 90°<) 1-2 s
- For easy installation and removal
- Integrated stainless steel mounting inserts

Option:

- Individual configuration of the valve (see form)

d [mm]	DN [mm]	PN	kv-value (Δp=1 bar) [l/min]	EPDM Code	FPM Code	kg
16	10	10	70	**199 231 082**	**199 231 092**	1.500
20	15	10	185	**199 231 083**	**199 231 093**	1.500
25	20	10	350	**199 231 084**	**199 231 094**	1.600
32	25	10	700	**199 231 085**	**199 231 095**	1.700
40	32	10	1000	**199 231 086**	**199 231 096**	2.800
50	40	10	1600	**199 231 087**	**199 231 097**	3.100
63	50	10	3100	**199 231 088**	**199 231 098**	4.000

d [mm]	D [mm]	H [mm]	H1 [mm]	H2 [mm]	H3 [mm]	H4 [mm]	H5 [mm]	L [mm]	L1 [mm]	L2 [mm]	L4 [mm]	L5 [mm]	L6 [mm]	L7 [mm]	z [mm]
16	50	230	27	62	168	40	97	93	194	56	25	261	76	48	67
20	50	230	27	62	168	40	97	95	194	56	25	261	76	48	66
25	58	239	30	71	168	40	97	108	194	65	25	261	76	48	77
32	68	239	36	71	168	40	97	118	194	71	25	261	76	48	83
40	84	271	44	84	187	51	115	137	224	85	45	305	95	59	99
50	97	271	51	84	187	51	115	147	224	89	45	305	95	59	105
63	124	293	64	106	187	51	115	168	224	101	45	305	95	59	117

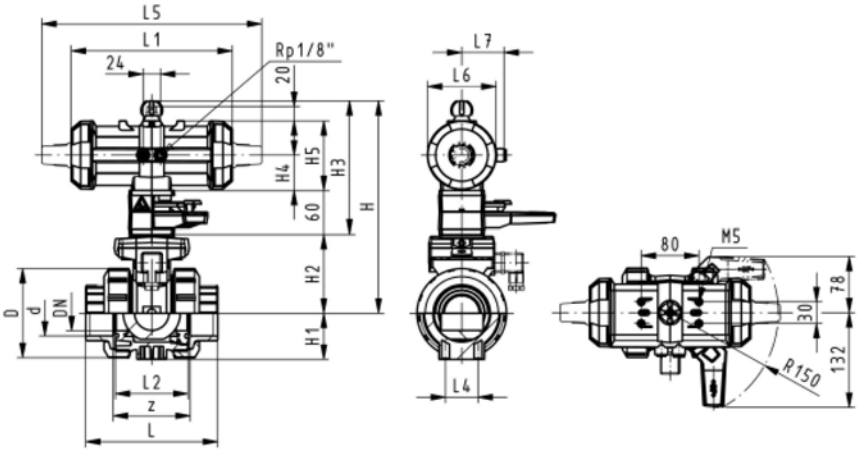

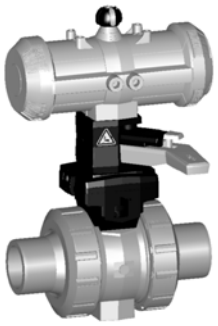

DN10/15 - 50

Ball valve type 231 PP-H FC (Fail safe to close)
With manual override
With fusion spigots metric

Model:

- Built on with pneumatic actuator PA11/21
- Control time 90°<) 1-2 s
- For easy installation and removal
- Integrated stainless steel mounting inserts

Option:

- Individual configuration of the valve (see form)

d [mm]	DN [mm]	PN	kv-value (Δp=1 bar) [l/min]	EPDM Code	FPM Code	kg
16	10	10	70	**199 231 022**	**199 231 032**	1.500
20	15	10	185	**199 231 023**	**199 231 033**	1.500
25	20	10	350	**199 231 024**	**199 231 034**	1.600
32	25	10	700	**199 231 025**	**199 231 035**	1.700
40	32	10	1000	**199 231 026**	**199 231 036**	2.800
50	40	10	1600	**199 231 027**	**199 231 037**	3.100
63	50	10	3100	**199 231 028**	**199 231 038**	4.000

d [mm]	D [mm]	H [mm]	H1 [mm]	H2 [mm]	H3 [mm]	H4 [mm]	H5 [mm]	L [mm]	L1 [mm]	L2 [mm]	L3 [mm]	L4 [mm]	L5 [mm]	L6 [mm]	L7 [mm]
16	50	230	27	62	168	40	97	110	194	56		25	261	76	48
20	50	230	27	62	168	40	97	120	194	56	130	25	261	76	48
25	58	239	30	71	168	40	97	139	194	65	150	25	261	76	48
32	68	239	36	71	168	40	97	150	194	71	160	25	261	76	48
40	84	271	44	84	187	51	115	170	224	85	180	45	305	95	59
50	97	271	51	84	187	51	115	190	224	89	200	45	305	95	59
63	124	293	64	106	187	51	115	220	224	101	230	45	305	95	59

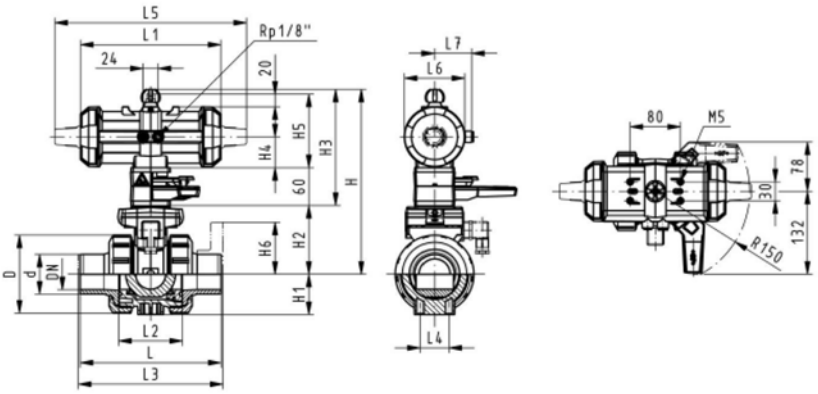

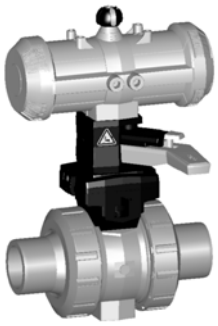

DN10/15 - 50

Ball valve type 231 PP-H FO (Fail safe to open)
With manual override
With fusion spigots metric

Model:

- Built on with pneumatic actuator PA11/21
- Control time 90°<) 1-2 s
- For easy installation and removal
- Integrated stainless steel mounting inserts

Option:

- Individual configuration of the valve (see form)

d [mm]	DN [mm]	PN	kv-value (Δp=1 bar) [l/min]	EPDM Code	FPM Code	kg
16	10	10	70	**199 231 062**	**199 231 072**	1.500
20	15	10	185	**199 231 063**	**199 231 073**	1.500
25	20	10	350	**199 231 064**	**199 231 074**	1.600
32	25	10	700	**199 231 065**	**199 231 075**	1.700
40	32	10	1000	**199 231 066**	**199 231 076**	2.800
50	40	10	1600	**199 231 067**	**199 231 077**	3.100
63	50	10	3100	**199 231 068**	**199 231 078**	4.000

d [mm]	D [mm]	H [mm]	H1 [mm]	H2 [mm]	H3 [mm]	H4 [mm]	H5 [mm]	L [mm]	L1 [mm]	L2 [mm]	L3 [mm]	L4 [mm]	L5 [mm]	L6 [mm]	L7 [mm]
16	50	230	27	62	168	40	97	110	194	56	130	25	261	76	48
20	50	230	27	62	168	40	97	120	194	56	130	25	261	76	48
25	58	239	30	71	168	40	97	139	194	65	150	25	261	76	48
32	68	239	36	71	168	40	97	150	194	71	160	25	261	76	48
40	84	271	44	84	187	51	115	170	224	85	180	45	305	95	59
50	97	271	51	84	187	51	115	190	224	89	200	45	305	95	59
63	124	293	64	106	187	51	115	220	224	101	230	45	305	95	59

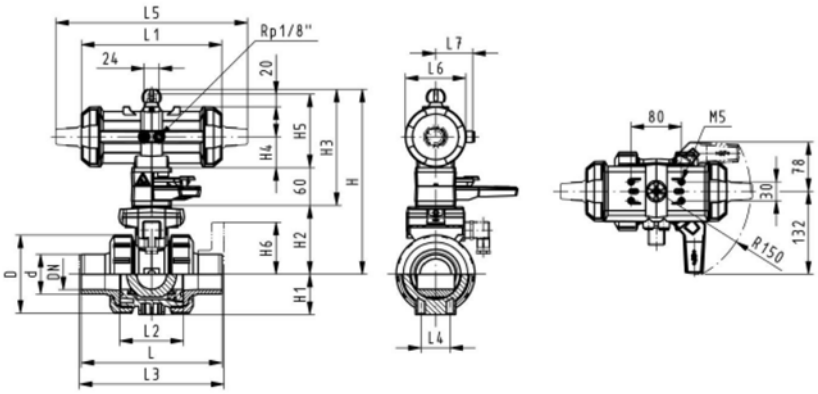

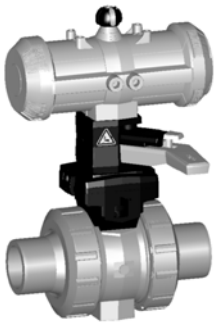

DN10/15 - 50

Ball valve type 231 PP-H DA (Double acting)
With manual override
With fusion spigots metric

Model:

- Built on with pneumatic actuator PA11/21
- Control time 90°<) 1-2 s
- For easy installation and removal
- Integrated stainless steel mounting inserts

Option:

- Individual configuration of the valve (see form)

d [mm]	DN [mm]	PN	kv-value (Δp=1 bar) [l/min]	EPDM Code	FPM Code	kg
16	10	10	70	**199 231 102**	**199 231 112**	1.500
20	15	10	185	**199 231 103**	**199 231 113**	1.500
25	20	10	350	**199 231 104**	**199 231 114**	1.600
32	25	10	700	**199 231 105**	**199 231 115**	1.700
40	32	10	1000	**199 231 106**	**199 231 116**	2.800
50	40	10	1600	**199 231 107**	**199 231 117**	3.100
63	50	10	3100	**199 231 108**	**199 231 118**	4.000

d [mm]	D [mm]	H [mm]	H1 [mm]	H2 [mm]	H3 [mm]	H4 [mm]	H5 [mm]	L [mm]	L1 [mm]	L2 [mm]	L3 [mm]	L4 [mm]	L5 [mm]	L6 [mm]	L7 [mm]
16	50	230	27	62	168	40	97	110	194	56		25	261	76	48
20	50	230	27	62	168	40	97	120	194	56	130	25	261	76	48
25	58	239	30	71	168	40	97	139	194	65	150	25	261	76	48
32	68	239	36	71	168	40	97	150	194	71	160	25	261	76	48
40	84	271	44	84	187	51	115	170	224	85	180	45	305	95	59
50	97	271	51	84	187	51	115	190	224	89	200	45	305	95	59
63	124	293	64	106	187	51	115	220	224	101	230	45	305	95	59

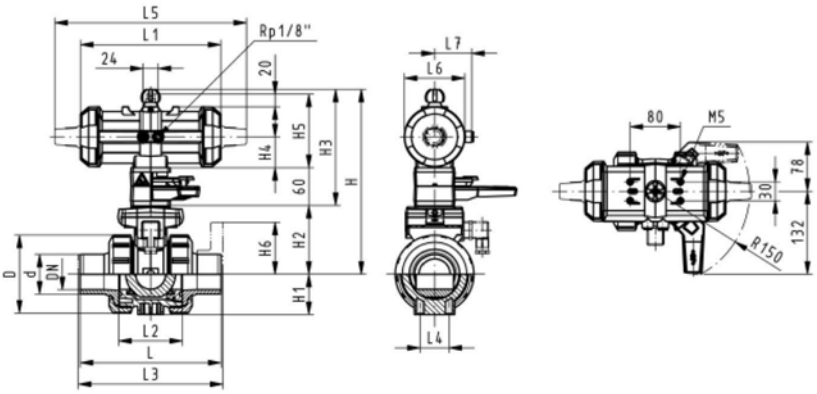

DN10/15 - 50

Ball valve type 231 PP-H FC (Fail safe to close)
With manual override
With fixed flanges PP-H serrated metric

Model:

- Built on with pneumatic actuator PA11/21
- Control time 90°<) 1-2 s
- For easy installation and removal
- Integrated stainless steel mounting inserts
- Overall length according to EN 558-1
- Connecting dimensions: ISO 7005 / EN 1092 / DIN 2501 PN10 / BS4504

Option:

- Individual configuration of the valve (see form)

d [mm]	DN [mm]	Inch	PN	kv-value (Δp=1 bar) [l/min]	EPDM Code	FPM Code	kg
20	15	½	10	185	**199 231 243**	**199 231 253**	1.700
25	20	¾	10	350	**199 231 244**	**199 231 254**	1.900
32	25	1	10	700	**199 231 245**	**199 231 255**	2.100
40	32	1 ¼	10	1000	**199 231 246**	**199 231 256**	3.400
50	40	1 ½	10	1600	**199 231 247**	**199 231 257**	3.900
63	50	2	10	3100	**199 231 248**	**199 231 258**	4.900

d [mm]	D [mm]	H [mm]	H1 [mm]	H2 [mm]	H3 [mm]	H4 [mm]	H5 [mm]	H6 [mm]	L [mm]	L1 [mm]	L2 [mm]	L3 [mm]	L4 [mm]	L5 [mm]	L6 [mm]
20	50	230	27	62	168	40	97	48	120	194	56	130	25	261	76
25	58	239	30	71	168	40	97	53	139	194	65	150	25	261	76
32	68	239	36	71	168	40	97	58	150	194	71	160	25	261	76
40	84	271	44	84	187	51	115	70	170	224	85	180	45	305	95
50	97	271	51	84	187	51	115	75	190	224	89	200	45	305	95
63	124	293	64	106	187	51	115	83	220	224	101	230	45	305	95

d [mm]	L7 [mm]
20	48
25	48
32	48
40	59
50	59
63	59

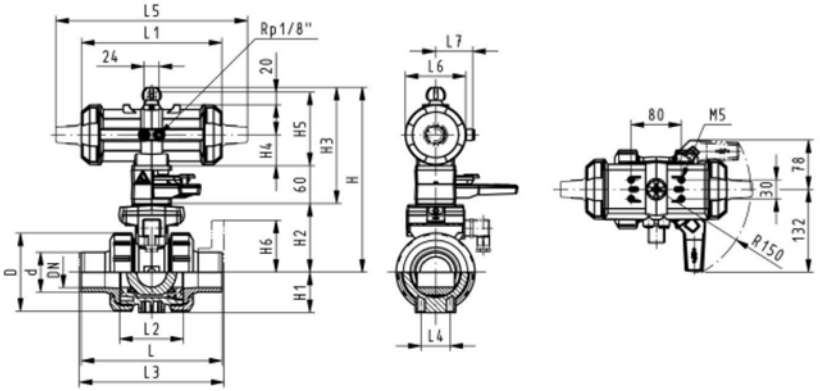

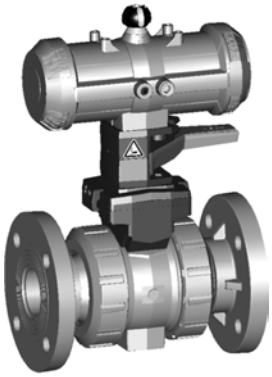

DN10/15 - 50

Ball valve type 231 PP-H FO (Fail safe to open)
With manual override
With fixed flanges PP-H serrated metric

Model:

- Built on with pneumatic actuator PA11/21
- Control time 90°<) 1-2 s
- For easy installation and removal
- Integrated stainless steel mounting inserts
- Overall length according to EN 558-1
- Connecting dimensions: ISO 7005 / EN 1092 / DIN 2501 PN10 / BS4504

Option:

- Individual configuration of the valve (see form)

d [mm]	DN [mm]	Inch	PN	kv-value (Δp=1 bar) [l/min]	EPDM Code	FPM Code	kg
20	15	½	10	185	**199 231 263**	**199 231 273**	1.700
25	20	¾	10	350	**199 231 264**	**199 231 274**	1.900
32	25	1	10	700	**199 231 265**	**199 231 275**	2.100
40	32	1 ¼	10	1000	**199 231 266**	**199 231 276**	3.400
50	40	1 ½	10	1600	**199 231 267**	**199 231 277**	3.900
63	50	2	10	3100	**199 231 268**	**199 231 278**	4.900

d [mm]	D [mm]	H [mm]	H1 [mm]	H2 [mm]	H3 [mm]	H4 [mm]	H5 [mm]	H6 [mm]	L [mm]	L1 [mm]	L2 [mm]	L3 [mm]	L4 [mm]	L5 [mm]	L6 [mm]
20	58	230	27	62	168	40	97	48	120	194	56	130	25	261	76
25	58	239	30	71	168	40	97	53	139	194	65	150	25	261	76
32	68	239	36	71	168	40	97	58	150	194	71	160	25	261	76
40	84	271	44	84	187	51	115	70	170	224	85	180	45	305	95
50	97	271	51	84	187	51	115	75	190	224	89	200	45	305	95
63	124	293	64	106	187	51	115	83	220	224	101	230	45	305	95

d [mm]	L7 [mm]
20	48
25	48
32	48
40	59
50	59
63	59

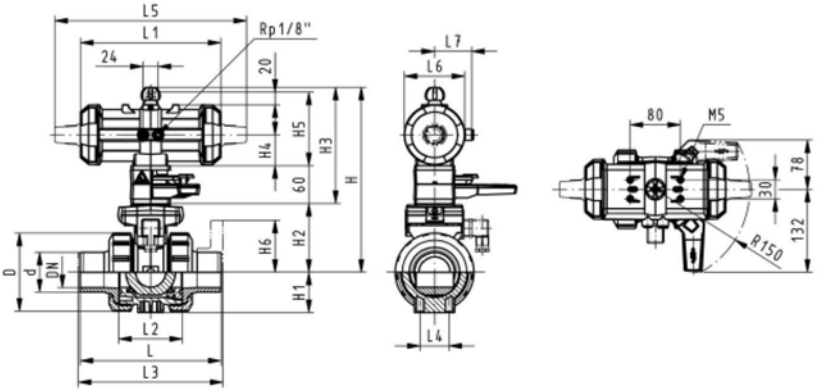

DN10/15 - 50

Ball valve type 231 PP-H DA (Double acting)
With manual override
With fixed flanges PP-H serrated metric

Model:

- Built on with pneumatic actuator PA11/21
- Control time 90°<) 1-2 s
- For easy installation and removal
- Integrated stainless steel mounting inserts
- Overall length according to EN 558-1
- Connecting dimensions: ISO 7005 / EN 1092 / DIN 2501 PN10 / BS4504

Option:

- Individual configuration of the valve (see form)

d [mm]	DN [mm]	Inch	PN	kv-value (Δp=1 bar) [l/min]	EPDM Code	FPM Code	kg
20	15	½	10	185	**199 231 283**	**199 231 293**	1.700
25	20	¾	10	350	**199 231 284**	**199 231 294**	1.900
32	25	1	10	700	**199 231 285**	**199 231 295**	2.100
40	32	1 ¼	10	1000	**199 231 286**	**199 231 296**	3.400
50	40	1 ½	10	1600	**199 231 287**	**199 231 297**	3.900
63	50	2	10	3100	**199 231 288**	**199 231 298**	4.900

d [mm]	D [mm]	H [mm]	H1 [mm]	H2 [mm]	H3 [mm]	H4 [mm]	H5 [mm]	H6 [mm]	L [mm]	L1 [mm]	L2 [mm]	L3 [mm]	L4 [mm]	L5 [mm]	L6 [mm]
20	50	230	27	62	168	40	97	48	120	194	56	130	25	261	76
25	58	239	30	71	168	40	97	53	139	194	65	150	25	261	76
32	68	239	36	71	168	40	97	58	150	194	71	160	25	261	76
40	84	271	44	84	187	51	115	70	170	224	85	180	45	305	95
50	97	271	51	84	187	51	115	75	190	224	89	200	45	305	95
63	124	293	64	106	187	51	115	83	220	224	101	230	45	305	95

d [mm]	L7 [mm]
20	48
25	48
32	48
40	59
50	59
63	59

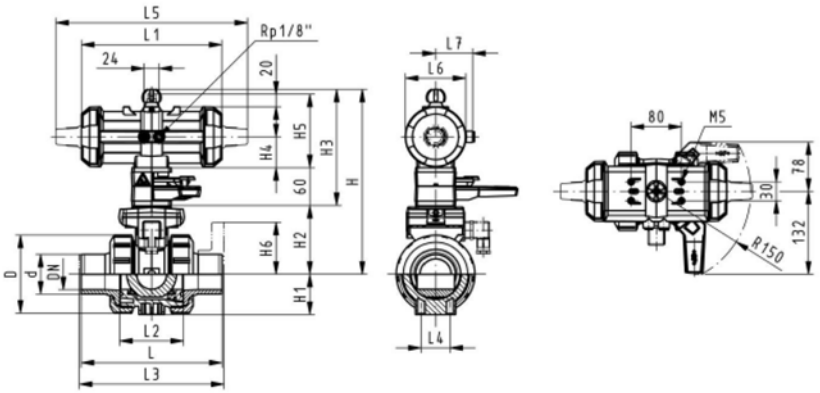

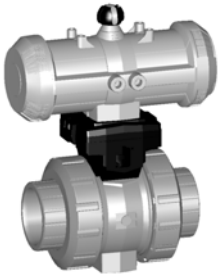

DN10/15 - 50

Ball valve type 231 PP-H FC (Fail safe to close)
Without manual override
With fusion sockets metric

Model:

- Assignment of actuators PA11 (DN10/15-25), PA21 (DN32-50), PA30 (DN65), PA35 (DN80), PA40 (DN100)
- Image and drawing DN65-100 please see **New product ball valve DN65-100**
- For easy installation and removal
- Integrated stainless steel mounting inserts
- Control time 90°<) 1-2 s

Option:

- Individual configuration of the valve (see form)

d [mm]	DN [mm]	PN	kv-value (Δp=1 bar) [l/min]	EPDM Code	FPM Code	kg
16	10	10	70	**199 231 122**	**199 231 132**	1.200
20	15	10	185	**199 231 123**	**199 231 133**	1.200
25	20	10	350	**199 231 124**	**199 231 134**	1.300
32	25	10	700	**199 231 125**	**199 231 135**	1.400
40	32	10	1000	**199 231 126**	**199 231 136**	2.500
50	40	10	1600	**199 231 127**	**199 231 137**	2.800
63	50	10	3100	**199 231 128**	**199 231 138**	3.700
New 75	65	10	5000	**199 231 129**	**199 231 139**	4.000
New 90	80	10	7000	**199 231 130**	**199 231 140**	4.700
New 110	100	10	11000	**199 231 131**	**199 231 141**	6.900

d [mm]	D [mm]	H [mm]	H1 [mm]	H2 [mm]	H4 [mm]	H5 [mm]	L [mm]	L1 [mm]	L2 [mm]	L4 [mm]	L5 [mm]	L6 [mm]	L7 [mm]	z [mm]
16	50	167	27	62	40	97	93	194	56	25	261	76	48	67
20	50	167	27	62	40	97	95	194	56	25	261	76	48	66
25	58	176	30	71	40	97	108	194	65	25	261	76	48	77
32	68	176	36	71	40	97	118	194	71	25	261	76	48	83
40	84	210	44	84	51	115	137	224	85	45	305	95	59	99
50	97	210	51	84	51	115	147	224	89	45	305	95	59	105
63	124	232	64	106	51	115	168	224	101	45	305	95	59	117
New 75	166	262	85	156		70	233	218	136	70	276	65		167
New 90	200	281	105	168		78	254	259	141	70	341	72		180
New 110	238	292	123	175		86	301	287	164	120	369	80		215

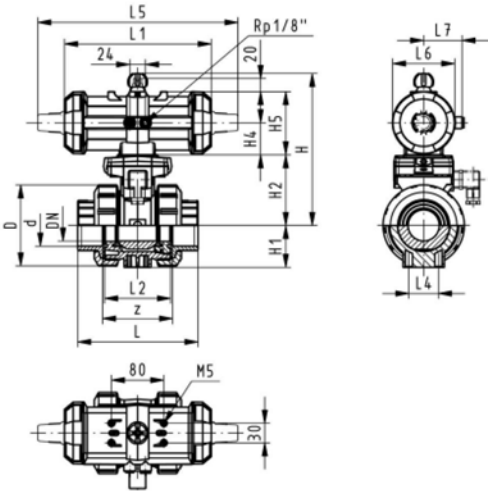

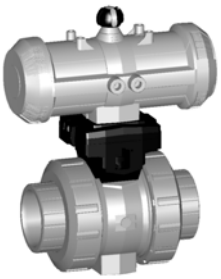

DN10/15 - 50

Ball valve type 231 PP-H FO (Fail safe to open)
Without manual override
With fusion sockets metric

Model:

- Assignment of actuators PA11 (DN10/15-25), PA21 (DN32-50), PA30 (DN65), PA35 (DN80), PA40 (DN100)
- Image and drawing DN65-100 please see **New product ball valve DN65-100**
- For easy installation and removal
- Integrated stainless steel mounting inserts
- Control time 90°<) 1-2 s

Option:

- Individual configuration of the valve (see form)

d [mm]	DN [mm]	PN	kv-value (Δp=1 bar) [l/min]	EPDM Code	FPM Code	kg
16	10	10	70	**199 231 162**	**199 231 172**	1.200
20	15	10	185	**199 231 163**	**199 231 173**	1.200
25	20	10	350	**199 231 164**	**199 231 174**	1.300
32	25	10	700	**199 231 165**	**199 231 175**	1.400
40	32	10	1000	**199 231 166**	**199 231 176**	2.500
50	40	10	1600	**199 231 167**	**199 231 177**	2.800
63	50	10	3100	**199 231 168**	**199 231 178**	3.700
New 75	65	10	5000	**199 231 169**	**199 231 179**	4.000
New 90	80	10	7000	**199 231 170**	**199 231 180**	4.700
New 110	100	10	11000	**199 231 171**	**199 231 181**	6.900

d [mm]	D [mm]	H [mm]	H1 [mm]	H2 [mm]	H4 [mm]	H5 [mm]	L [mm]	L1 [mm]	L2 [mm]	L4 [mm]	L5 [mm]	L6 [mm]	L7 [mm]	z [mm]
16	50	167	27	62	40	97	93	194	56	25	261	76	48	66
20	50	167	27	62	40	97	95	194	56	25	261	76	48	67
25	58	176	30	71	40	97	108	194	65	25	261	76	48	77
32	68	176	36	71	40	97	118	194	71	25	261	76	48	83
40	84	210	44	84	51	115	137	224	85	45	305	95	59	99
50	97	210	51	84	51	115	147	224	89	45	305	95	59	105
63	124	232	64	106	51	115	168	224	101	45	305	95	59	117
New 75	166	262	85	156		70	233	218	136	70	276	65		167
New 90	200	281	105	168		78	254	259	141	70	341	72		180
New 110	238	292	123	175		86	301	287	164	120	369	80		215

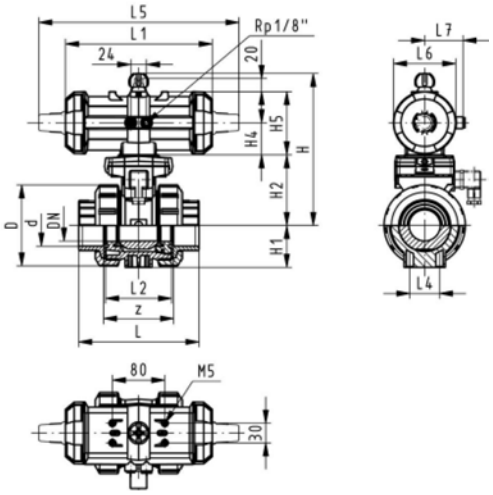

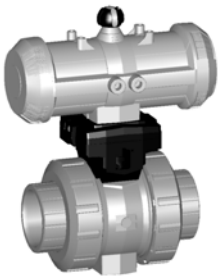

DN10/15 - 50

Ball valve type 231 PP-H DA (Double acting)
Without manual override
With fusion sockets metric

Model:

- Assignment of actuators: PA11 (DN10/15-25), PA21 (DN32-50), PA35 (DN65), PA40 (DN80), PA45 (DN100)
- Image and drawing DN65-100 please see **New product ball valve DN65-100**
- For easy installation and removal
- Integrated stainless steel mounting inserts
- Control time 90°<) 1-2 s

Option:

- Individual configuration of the valve (see form)

d [mm]	DN [mm]	PN	kv-value (Δp=1 bar) [l/min]	EPDM Code	FPM Code	kg
16	10	10	70	**199 231 202**	**199 231 212**	1.200
20	15	10	185	**199 231 203**	**199 231 213**	1.200
25	20	10	350	**199 231 204**	**199 231 214**	1.300
32	25	10	700	**199 231 205**	**199 231 215**	1.400
40	32	10	1000	**199 231 206**	**199 231 216**	2.500
50	40	10	1600	**199 231 207**	**199 231 217**	2.800
63	50	10	3100	**199 231 208**	**199 231 218**	3.700
New 75	65	10	5000	**199 231 209**	**199 231 219**	2.800
New 90	80	10	7000	**199 231 210**	**199 231 220**	4.000
New 110	100	10	11000	**199 231 211**	**199 231 221**	5.100

d [mm]	D [mm]	H [mm]	H1 [mm]	H2 [mm]	H4 [mm]	H5 [mm]	L [mm]	L1 [mm]	L2 [mm]	L4 [mm]	L5 [mm]	L6 [mm]	L7 [mm]	z [mm]
16	50	167	27	62	40	97	93	194	56	25	261	76	48	66
20	50	167	27	62	40	97	95	194	56	25	261	76	48	67
25	58	176	30	71	40	97	108	194	65	25	261	76	48	77
32	68	176	36	71	40	97	118	194	71	25	261	76	48	83
40	84	210	44	84	51	115	137	224	85	45	305	95	59	99
50	97	210	51	84	51	115	147	224	89	45	305	95	59	105
63	124	232	64	106	51	115	168	224	101	45	305	95	59	117
New 75	166	257	85	156		66	233	144	136	70	190	60		167
New 90	200	274	105	168		70	254	152	141	70	198	65		180
New 110	238	273	123	175		78	301	169	164	120	235	72		215

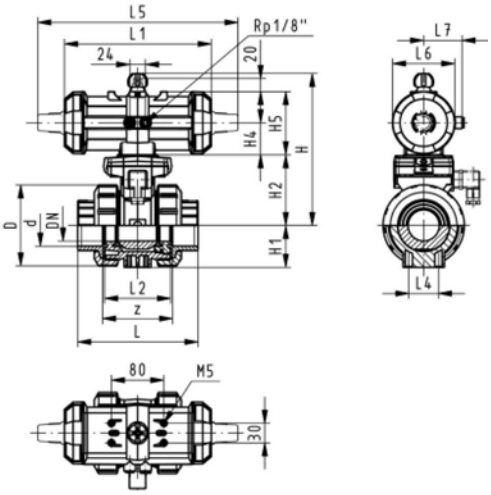

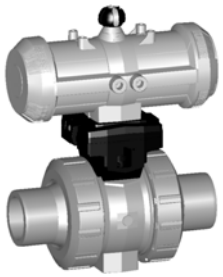

DN10/15 - 50

Ball valve type 231 PP-H FC (Fail safe to close)
Without manual override
With socket fusion spigots metric

Model:

- Assignment of actuators PA11 (DN10/15-25), PA21 (DN32-50), PA30 (DN65), PA35 (DN80), PA40 (DN100)
- Image and drawing DN65-100 please see **New product ball valve DN65-100**
- For easy installation and removal
- Integrated stainless steel mounting inserts
- Control time 90°<) 1-2 s

Option:

- Individual configuration of the valve (see form)

d [mm]	DN [mm]	PN	kv-value (Δp=1 bar) [l/min]	EPDM Code	FPM Code	kg
16	10	10	70	**199 231 142**	**199 231 152**	1.200
20	15	10	185	**199 231 143**	**199 231 153**	1.200
25	20	10	350	**199 231 144**	**199 231 154**	1.300
32	25	10	700	**199 231 145**	**199 231 155**	1.400
40	32	10	1000	**199 231 146**	**199 231 156**	2.500
50	40	10	1600	**199 231 147**	**199 231 157**	2.800
63	50	10	3100	**199 231 148**	**199 231 158**	3.700
New 75	65	10	5000	**199 231 149**	**199 231 159**	4.000
New 90	80	10	7000	**199 231 150**	**199 231 160**	4.800
New 110	100	10	11000	**199 231 151**	**199 231 161**	6.900

d [mm]	D [mm]	H [mm]	H1 [mm]	H2 [mm]	H4 [mm]	H5 [mm]	L [mm]	L1 [mm]	L2 [mm]	L3 [mm]	L4 [mm]	L5 [mm]	L6 [mm]	L7 [mm]
16	50	167	27	62	40	97	110	194	56	130	25	261	76	48
20	50	167	27	62	40	97	120	194	56	130	25	261	76	48
25	58	176	30	71	40	97	139	194	65	150	25	261	76	48
32	68	176	36	71	40	97	150	194	71	160	25	261	76	48
40	84	210	44	84	51	115	170	224	85	180	45	305	95	59
50	97	210	51	84	51	115	190	224	89	200	45	305	95	59
63	124	232	64	106	51	115	220	224	101	230	45	305	95	59
New 75	166	262	85	156		70	280	218	136	290	70	276	65	
New 90	200	281	105	168		78	296	259	141	310	70	341	72	
New 110	238	292	123	175		86	336	287	164	350	120	369	80	

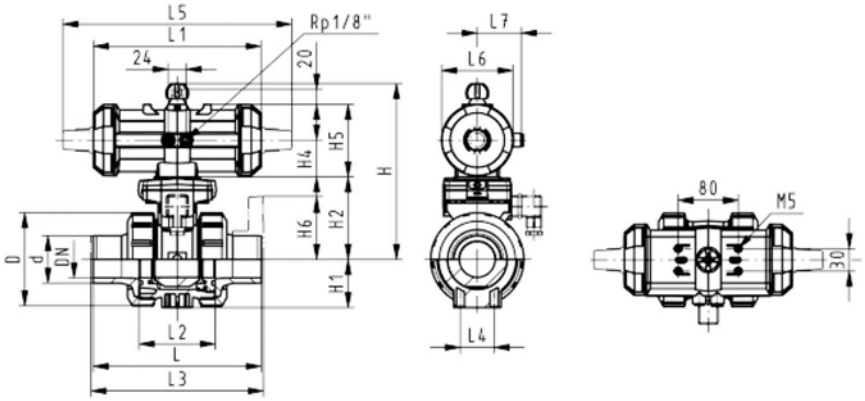

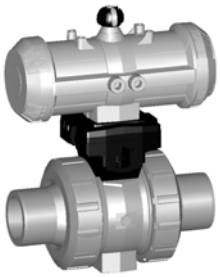

DN10/15 - 50

Ball valve type 231 PP-H FO (Fail safe to open)
Without manual override
With socket fusion spigots metric

Model:

- Assignment of actuators PA11 (DN10/15-25), PA21 (DN32-50), PA30 (DN65), PA35 (DN80), PA40 (DN100)
- Image and drawing DN65-100 please see **New product ball valve DN65-100**
- For easy installation and removal
- Integrated stainless steel mounting inserts
- Control time 90°<) 1-2 s

Option:

- Individual configuration of the valve (see form)

d [mm]	DN [mm]	PN	kv-value (Δp=1 bar) [l/min]	EPDM Code	FPM Code	kg
16	10	10	70	**199 231 182**	**199 231 192**	1.200
20	15	10	185	**199 231 183**	**199 231 193**	1.200
25	20	10	350	**199 231 184**	**199 231 194**	1.300
32	25	10	700	**199 231 185**	**199 231 195**	1.400
40	32	10	1000	**199 231 186**	**199 231 196**	2.500
50	40	10	1600	**199 231 187**	**199 231 197**	2.800
63	50	10	3100	**199 231 188**	**199 231 198**	3.700
New 75	65	10	5000	**199 231 189**	**199 231 199**	4.000
New 90	80	10	7000	**199 231 190**	**199 231 200**	4.800
New 110	100	10	11000	**199 231 191**	**199 231 201**	6.900

d [mm]	D [mm]	H [mm]	H1 [mm]	H2 [mm]	H4 [mm]	H5 [mm]	L [mm]	L1 [mm]	L2 [mm]	L3 [mm]	L4 [mm]	L5 [mm]	L6 [mm]	L7 [mm]
16	50	167	27	62	40	97	110	194	56	130	25	261	76	48
20	50	167	27	62	40	97	120	194	56	130	25	261	76	48
25	58	176	30	71	40	97	139	194	65	150	25	261	76	48
32	68	176	36	71	40	97	150	194	71	160	25	261	76	48
40	84	210	44	84	51	115	170	224	85	180	45	305	95	59
50	97	210	51	84	51	115	190	224	89	200	45	305	95	59
63	124	232	64	106	51	115	220	224	101	230	45	305	95	59
New 75	166	262	85	156		70	280	218	136	290	70	276	65	
New 90	200	281	105	168		78	296	259	141	310	70	341	72	
New 110	238	292	123	175		86	336	287	164	350	120	369	80	

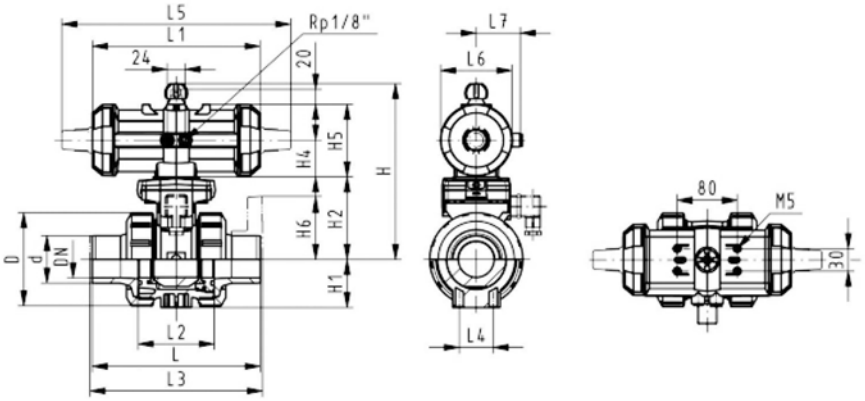

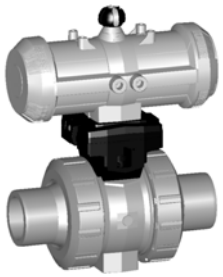

DN10/15 - 50

Ball valve type 231 PP-H DA (Double acting)
Without manual override
With socket fusion spigots metric

Model:

- Assignment of actuators: PA11 (DN10/15-25), PA21 (DN32-50), PA35 (DN65), PA40 (DN80), PA45 (DN100)
- Image and drawing DN65-100 please see **New product ball valve DN65-100**
- For easy installation and removal
- Integrated stainless steel mounting inserts
- Control time 90°<) 1-2 s

Option:

- Individual configuration of the valve (see form)

d [mm]	DN [mm]	PN	kv-value (Δp=1 bar) [l/min]	EPDM Code	FPM Code	kg
16	10	10	70	**199 231 222**	**199 231 232**	1.200
20	15	10	185	**199 231 223**	**199 231 233**	1.200
25	20	10	350	**199 231 224**	**199 231 234**	1.300
32	25	10	700	**199 231 225**	**199 231 235**	1.400
40	32	10	1000	**199 231 226**	**199 231 236**	2.500
50	40	10	1600	**199 231 227**	**199 231 237**	2.800
63	50	10	3100	**199 231 228**	**199 231 238**	3.700
New 75	65	10	5000	**199 231 229**	**199 231 239**	2.900
New 90	80	10	7000	**199 231 230**	**199 231 240**	4.100
New 110	100	10	11000	**199 231 231**	**199 231 241**	5.200

d [mm]	D [mm]	H [mm]	H1 [mm]	H2 [mm]	H4 [mm]	H5 [mm]	L [mm]	L1 [mm]	L2 [mm]	L3 [mm]	L4 [mm]	L5 [mm]	L6 [mm]	L7 [mm]
16	50	167	27	62	40	97	110	194	56	130	25	261	76	48
20	50	167	27	62	40	97	120	194	56	130	25	261	76	48
25	58	176	30	71	40	97	139	194	65	150	25	261	76	48
32	68	176	36	71	40	97	150	194	71	160	25	261	76	48
40	84	210	44	84	51	115	170	224	85	180	45	305	95	59
50	97	210	51	84	51	115	190	224	89	200	45	305	95	59
63	124	232	64	106	51	115	220	224	101	230	45	305	95	59
New 75	166	257	85	156		66	280	144	136	290	70	190	60	
New 90	200	274	105	168		70	296	152	141	310	70	198	65	
New 110	238	273	123	175		78	336	169	164	350	120	235	72	

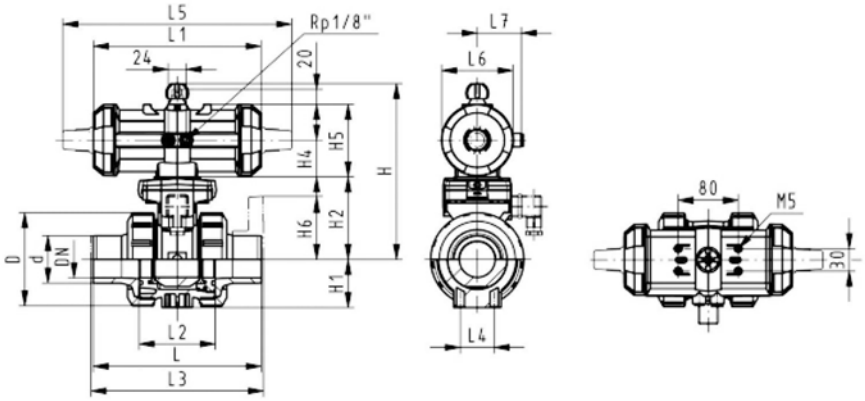

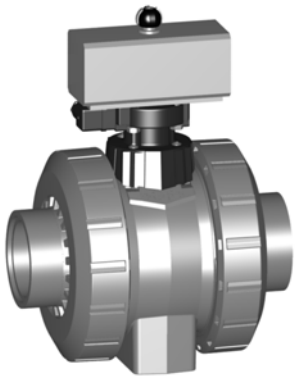

Ball valve type 231 PP-H FC (Fail safe to close)
Without manual override
With butt fusion spigots SDR11 metric

Model:

- Assignment of actuators PA11 (DN10/15-25), PA21 (DN32-50), PA30 (DN65), PA35 (DN80), PA40 (DN100)
- Image and drawing DN65-100 please see **New product ball valve DN65-100**
- For easy installation and removal
- Integrated stainless steel mounting inserts
- Control time 90°<) 1-2 s

Option:

- Individual configuration of the valve (see form)

d [mm]	DN [mm]	PN	kv-value (Δp=1 bar) [l/min]	EPDM Code	FPM Code	kg
New 75	65	10	5000	**199 231 839**	**199 231 849**	4.000
New 90	80	10	7000	**199 231 840**	**199 231 850**	4.800
New 110	100	10	11000	**199 231 841**	**199 231 851**	6.900

d [mm]	D [mm]	H [mm]	H1 [mm]	H2 [mm]	H5 [mm]	L [mm]	L1 [mm]	L2 [mm]	L3 [mm]	L4 [mm]	L5 [mm]	L6 [mm]	e [mm]
New 75	166	262	85	156	70	266	218	136	290	70	276	65	8.2
New 90	200	281	105	168	78	264	259	141	310	70	341	72	9.9
New 110	238	292	123	175	86	301	287	164	350	120	369	80	12.0

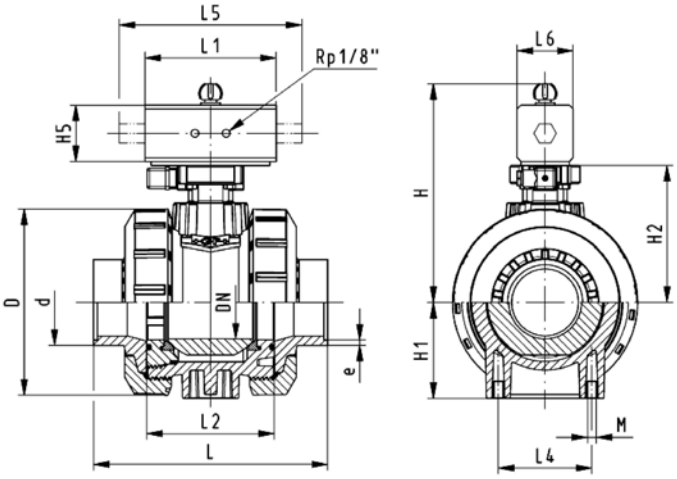

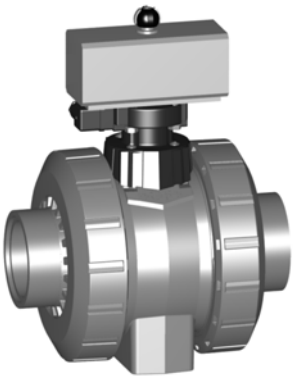

Ball valve type 231 PP-H FO (Fail safe to open)
Without manual override
With butt fusion spigots SDR11 metric

Model:

- Assignment of actuators PA11 (DN10/15-25), PA21 (DN32-50), PA30 (DN65), PA35 (DN80), PA40 (DN100)
- Image and drawing DN65-100 please see **New product ball valve DN65-100**
- For easy installation and removal
- Integrated stainless steel mounting inserts
- Control time 90°<) 1-2 s

Option:

- Individual configuration of the valve (see form)

d [mm]	DN [mm]	PN	kv-value (Δp=1 bar) [l/min]	EPDM Code	FPM Code	kg
New 75	65	10	5000	**199 231 859**	**199 231 869**	4.000
New 90	80	10	7000	**199 231 860**	**199 231 870**	4.800
New 110	100	10	11000	**199 231 861**	**199 231 871**	6.900

d [mm]	D [mm]	H [mm]	H1 [mm]	H2 [mm]	H5 [mm]	L [mm]	L1 [mm]	L2 [mm]	L3 [mm]	L4 [mm]	L5 [mm]	L6 [mm]	e [mm]
New 75	166	262	85	156	70	266	218	136	290	70	276	65	8.2
New 90	200	281	105	168	78	264	259	141	310	70	341	72	9.9
New 110	238	292	123	175	86	301	287	164	350	120	369	80	12.0

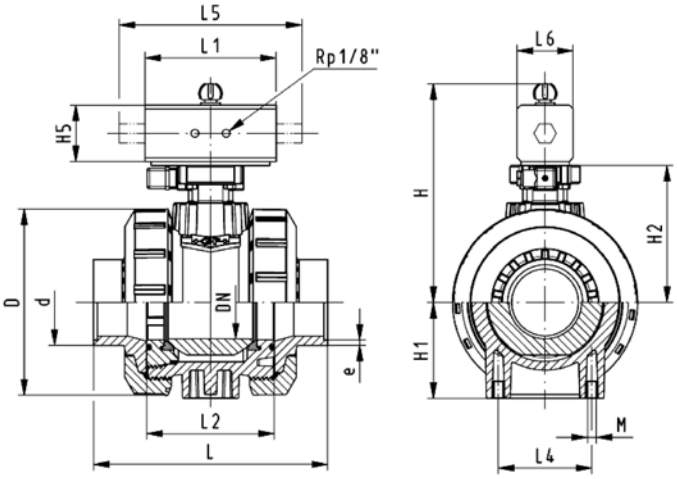

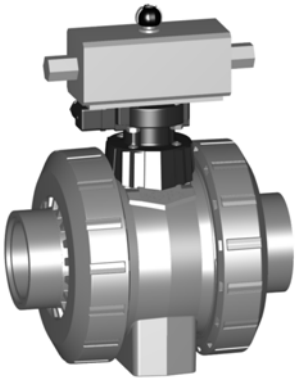

Ball valve type 231 PP-H DA (Double acting)
Without manual override
With butt fusion spigots SDR11 metric

Model:

- Assignment of actuators: PA11 (DN10/15-25), PA21 (DN32-50), PA35 (DN65), PA40 (DN80), PA45 (DN100)
- Image and drawing DN65-100 please see **New product ball valve DN65-100**
- For easy installation and removal
- Integrated stainless steel mounting inserts
- Control time 90°<) 1-2 s

Option:

- Individual configuration of the valve (see form)

d [mm]	DN [mm]	PN	kv-value (Δp=1 bar) [l/min]	EPDM Code	FPM Code	kg
New 75	65	10	5000	**199 231 879**	**199 231 889**	2.900
New 90	80	10	7000	**199 231 880**	**199 231 890**	4.100
New 110	100	10	11000	**199 231 881**	**199 231 891**	5.200

d [mm]	D [mm]	H [mm]	H1 [mm]	H2 [mm]	H5 [mm]	L [mm]	L1 [mm]	L2 [mm]	L3 [mm]	L4 [mm]	L5 [mm]	L6 [mm]	e [mm]
New 75	166	257	85	156	66	266	144	136	290	70	190	60	8.2
New 90	200	274	105	168	70	264	152	141	310	70	198	65	9.9
New 110	238	273	123	175	78	301	169	164	350	120	235	72	12.0

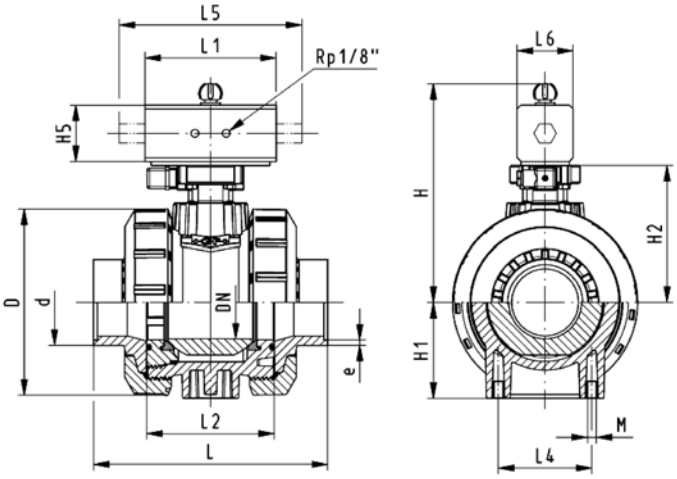

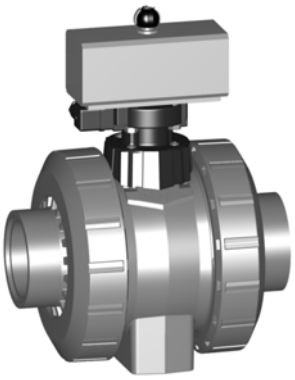

Ball valve type 231 PP-H FC (Fail safe to close)
Without manual override
With butt fusion spigots SDR17.6 metric

Model:

- Assignment of actuators PA11 (DN10/15-25), PA21 (DN32-50), PA30 (DN65), PA35 (DN80), PA40 (DN100)
- Image and drawing DN65-100 please see **New product ball valve DN65-100**
- For easy installation and removal
- Integrated stainless steel mounting inserts
- Control time 90°<) 1-2 s

Option:

- Individual configuration of the valve (see form)

d [mm]	DN [mm]	PN	kv-value (Δp=1 bar) [l/min]	EPDM Code	FPM Code	kg
New 75	65	10	5000	**199 231 939**	**199 231 949**	4.000
New 90	80	10	7000	**199 231 940**	**199 231 950**	4.800
New 110	100	10	11000	**199 231 941**	**199 231 951**	6.900

d [mm]	D [mm]	H [mm]	H1 [mm]	H2 [mm]	H5 [mm]	L [mm]	L1 [mm]	L2 [mm]	L3 [mm]	L4 [mm]	L5 [mm]	L6 [mm]	e [mm]
New 75	166	262	85	156	70	266	218	136	290	70	276	65	4.6
New 90	200	281	105	168	78	264	259	141	310	70	341	72	5.5
New 110	238	292	123	175	86	301	287	164	350	120	369	80	6.7

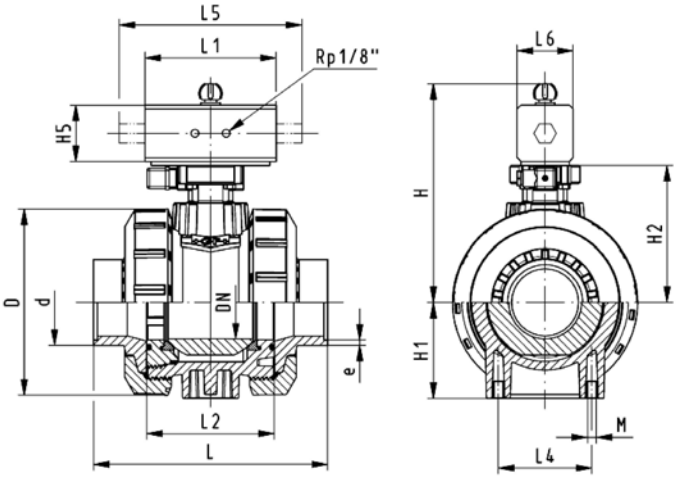

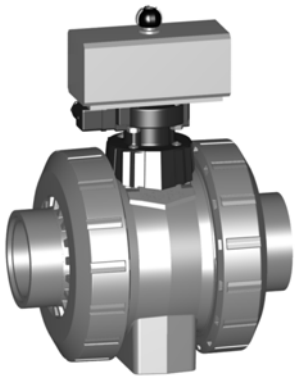

Ball valve type 231 PP-H FO (Fail safe to open)
Without manual override
With butt fusion spigots SDR17.6 metric

Model:

- Assignment of actuators PA11 (DN10/15-25), PA21 (DN32-50), PA30 (DN65), PA35 (DN80), PA40 (DN100)
- Image and drawing DN65-100 please see **New product ball valve DN65-100**
- For easy installation and removal
- Integrated stainless steel mounting inserts
- Control time 90°<) 1-2 s

Option:

- Individual configuration of the valve (see form)

d [mm]	DN [mm]	PN	kv-value (Δp=1 bar) [l/min]	EPDM Code	FPM Code	kg
New 75	65	10	5000	**199 231 959**	**199 231 969**	4.000
New 90	80	10	7000	**199 231 960**	**199 231 970**	4.800
New 110	100	10	11000	**199 231 961**	**199 231 971**	6.900

d [mm]	D [mm]	H [mm]	H1 [mm]	H2 [mm]	H5 [mm]	L [mm]	L1 [mm]	L2 [mm]	L3 [mm]	L4 [mm]	L5 [mm]	L6 [mm]	e [mm]
New 75	166	262	85	156	70	266	218	136	290	70	276	65	4.6
New 90	200	281	105	168	78	264	259	141	310	70	341	72	5.5
New 110	238	292	123	175	86	301	287	164	350	120	369	80	6.7

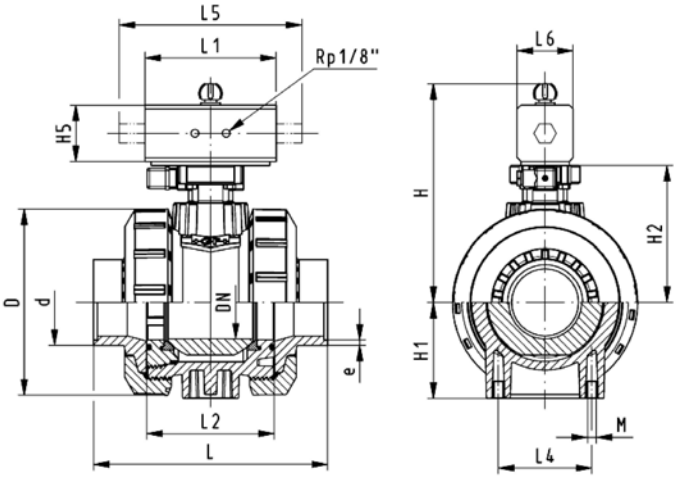

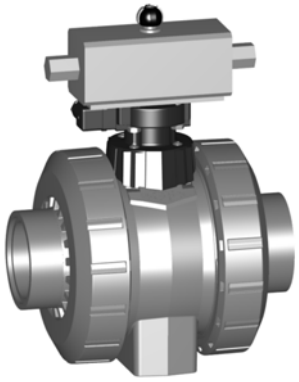

Ball valve type 231 PP-H DA (Double acting)
Without manual override
With butt fusion spigots SDR17.6 metric

Model:

- Assignment of actuators: PA11 (DN10/15-25), PA21 (DN32-50), PA35 (DN65), PA40 (DN80), PA45 (DN100)
- Image and drawing DN65-100 please see **New product ball valve DN65-100**
- For easy installation and removal
- Integrated stainless steel mounting inserts
- Control time 90°<) 1-2 s

Option:

- Individual configuration of the valve (see form)

d [mm]	DN [mm]	PN	kv-value (Δp=1 bar) [l/min]	EPDM Code	FPM Code	kg
New 75	65	10	5000	**199 231 979**	**199 231 989**	2.900
New 90	80	10	7000	**199 231 980**	**199 231 990**	4.100
New 110	100	10	11000	**199 231 981**	**199 231 991**	5.200

d [mm]	D [mm]	H [mm]	H1 [mm]	H2 [mm]	H5 [mm]	L [mm]	L1 [mm]	L2 [mm]	L3 [mm]	L4 [mm]	L5 [mm]	L6 [mm]	e [mm]
New 75	166	257	85	156	66	266	144	136	290	70	190	60	4.6
New 90	200	274	105	168	70	264	152	141	310	70	198	65	5.5
New 110	238	273	123	175	78	301	169	164	350	120	235	72	6.7

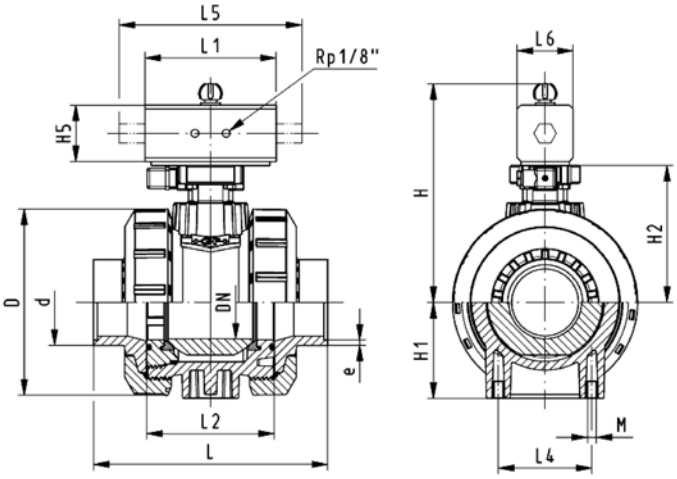

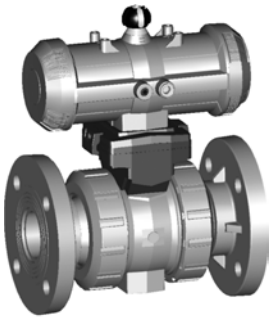

DN10/15 - 50

Ball valve type 231 PP-H FC (Fail safe to close)
Without manual override
With fixed flanges PP-H serrated metric

Model:

- Assignment of actuators PA11 (DN10/15-25), PA21 (DN32-50), PA30 (DN65), PA35 (DN80), PA40 (DN100)
- Image and drawing DN65-100 please see **New product ball valve DN65-100**
- For easy installation and removal
- Integrated stainless steel mounting inserts
- Control time 90°<) 1-2 s
- Overall length according to EN 558-1
- Connecting dimensions: ISO 7005 / EN 1092 / DIN 2501 PN10 / BS4504

Option:

- Individual configuration of the valve (see form)

d [mm]	DN [mm]	Inch	PN	kv-value (Δp=1 bar) [l/min]	EPDM Code	FPM Code	kg
20	15	½	10	185	**199 231 423**	**199 231 433**	1.400
25	20	¾	10	350	**199 231 424**	**199 231 434**	1.600
32	25	1	10	700	**199 231 425**	**199 231 435**	1.800
40	32	1 ¼	10	1000	**199 231 426**	**199 231 436**	3.100
50	40	1 ½	10	1600	**199 231 427**	**199 231 437**	3.600
63	50	2	10	3100	**199 231 428**	**199 231 438**	4.700

d [mm]	D [mm]	H [mm]	H1 [mm]	H2 [mm]	H4 [mm]	H5 [mm]	H6 [mm]	L [mm]	L1 [mm]	L2 [mm]	L3 [mm]	L4 [mm]	L5 [mm]	L6 [mm]	L7 [mm]
20	50	167	27	62	40	97	48	120	194	56	130	25	261	76	48
25	58	176	30	71	40	97	53	140	194	65	150	25	261	76	48
32	68	176	36	71	40	97	58	150	194	71	160	25	261	76	48
40	84	210	44	84	51	115	70	170	224	85	180	45	305	95	59
50	97	210	51	84	51	115	75	190	224	89	200	45	305	95	59
63	124	232	64	106	51	115	83	220	224	101	230	45	305	95	59

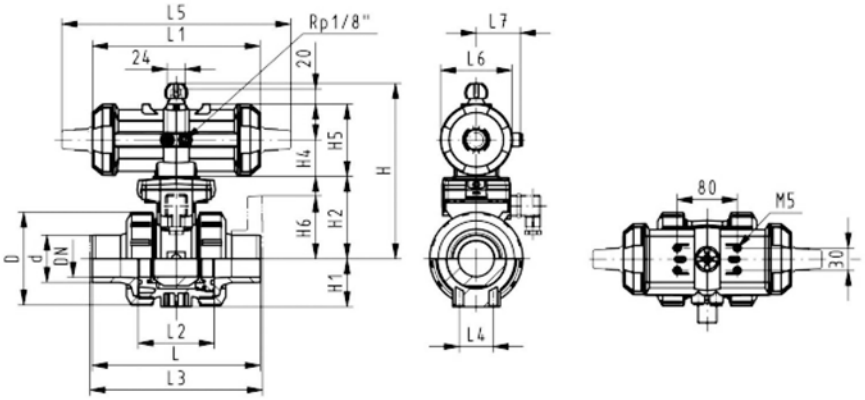

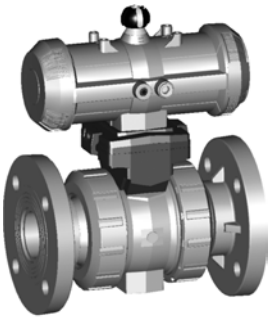

DN10/15 - 50

Ball valve type 231 PP-H FO (Fail safe to open)
Without manual override
With fixed flanges PP-H serrated metric

Model:

- Assignment of actuators PA11 (DN10/15-25), PA21 (DN32-50), PA30 (DN65), PA35 (DN80), PA40 (DN100)
- Image and drawing DN65-100 please see **New product ball valve DN65-100**
- For easy installation and removal
- Integrated stainless steel mounting inserts
- Control time 90°<) 1-2 s
- Overall length according to EN 558-1
- Connecting dimensions: ISO 7005 / EN 1092 / DIN 2501 PN10 / BS4504

Option:

- Individual configuration of the valve (see form)

d [mm]	DN [mm]	Inch	PN	kv-value (Δp=1 bar) [l/min]	EPDM Code	FPM Code	kg
20	15	½	10	185	**199 231 443**	**199 231 453**	1.400
25	20	¾	10	350	**199 231 444**	**199 231 454**	1.600
32	25	1	10	700	**199 231 445**	**199 231 455**	1.800
40	32	1 ¼	10	1000	**199 231 446**	**199 231 456**	3.100
50	40	1 ½	10	1600	**199 231 447**	**199 231 457**	3.600
63	50	2	10	3100	**199 231 448**	**199 231 458**	4.700

d [mm]	D [mm]	H [mm]	H1 [mm]	H2 [mm]	H4 [mm]	H5 [mm]	H6 [mm]	L [mm]	L1 [mm]	L2 [mm]	L3 [mm]	L4 [mm]	L5 [mm]	L6 [mm]	L7 [mm]
20	50	167	27	62	40	97	48	120	194	56	130	25	261	76	48
25	58	176	30	71	40	97	53	140	194	65	150	25	261	76	48
32	68	176	36	71	40	97	58	150	194	71	160	25	261	76	48
40	84	210	44	84	51	115	70	170	224	85	180	45	305	95	59
50	97	210	51	84	51	115	75	190	224	89	200	45	305	95	59
63	124	232	64	106	51	115	83	220	224	101	230	45	305	95	59

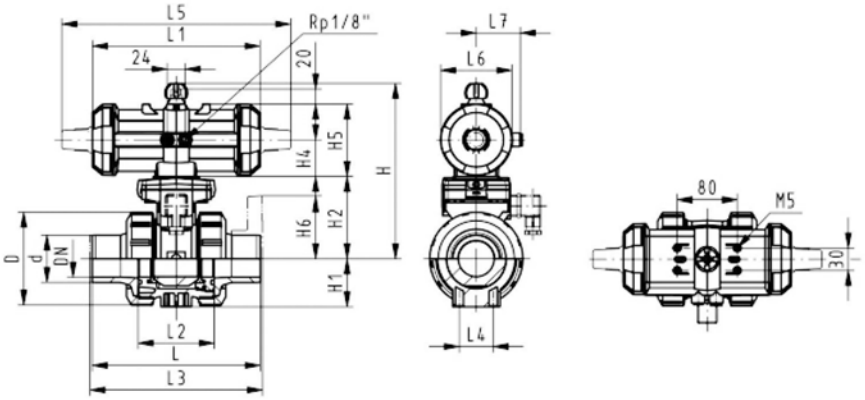

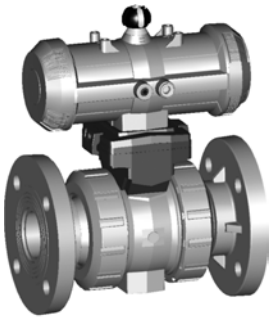

DN10/15 - 50

Ball valve type 231 PP-H DA (Double acting)
Without manual override
With fixed flanges PP-H serrated metric

Model:

- Assignment of actuators: PA11 (DN10/15-25), PA21 (DN32-50), PA35 (DN65), PA40 (DN80), PA45 (DN100)
- Image and drawing DN65-100 please see **New product ball valve DN65-100**
- For easy installation and removal
- Integrated stainless steel mounting inserts
- Control time 90°<) 1-2 s
- Overall length according to EN 558-1
- Connecting dimensions: ISO 7005 / EN 1092 / DIN 2501 PN10 / BS4504

Option:

- Individual configuration of the valve (see form)

d [mm]	DN [mm]	Inch	PN	kv-value (Δp=1 bar) [l/min]	EPDM Code	FPM Code	kg
20	15	½	10	185	**199 231 463**	**199 231 473**	1.400
25	20	¾	10	350	**199 231 464**	**199 231 474**	1.600
32	25	1	10	700	**199 231 465**	**199 231 475**	1.800
40	32	1 ¼	10	1000	**199 231 466**	**199 231 476**	3.100
50	40	1 ½	10	1600	**199 231 467**	**199 231 477**	3.600
63	50	2	10	3100	**199 231 468**	**199 231 478**	4.700

d [mm]	D [mm]	H [mm]	H1 [mm]	H2 [mm]	H4 [mm]	H5 [mm]	H6 [mm]	L [mm]	L1 [mm]	L2 [mm]	L3 [mm]	L4 [mm]	L5 [mm]	L6 [mm]	L7 [mm]
20	50	167	27	62	40	97	48	120	194	56	130	25	261	76	48
25	58	176	30	71	40	97	53	140	194	65	150	25	261	76	48
32	68	176	36	71	40	97	58	150	194	71	160	25	261	76	48
40	84	210	44	84	51	115	70	170	224	85	180	45	305	95	59
50	97	210	51	84	51	115	75	190	224	89	200	45	305	95	59
63	124	232	64	106	51	115	83	220	224	101	230	45	305	95	59

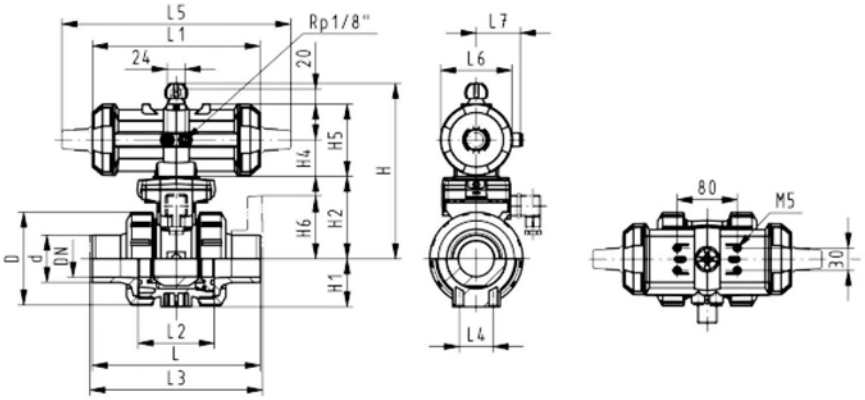

Ball valve type 231 PP-H FC (Fail safe to close)
Without manual override
With backing flanges PP-st metric

Model:

- Assignment of actuators PA11 (DN10/15-25), PA21 (DN32-50), PA30 (DN65), PA35 (DN80), PA40 (DN100)
- Image and drawing DN65-100 please see **New product ball valve DN65-100**
- For easy installation and removal
- Integrated stainless steel mounting inserts
- Control time 90°<) 1-2 s
- Overall length according to EN 558-1
- Connecting dimensions: ISO 7005, EN 1092, BS 4504, DIN 2501; bolt circle PN 10

Option:

- Individual configuration of the valve (see form)

d [mm]	DN [mm]	Inch	PN	kv-value (Δp=1 bar) [l/min]	EPDM Code	FPM Code	kg
New 75	65	2 ½	10	5000	**199 231 329**	**199 231 339**	8.300
New 90	80	3	10	7000	**199 231 330**	**199 231 340**	10.000
New 110	100	4	10	11000	**199 231 331**	**199 231 341**	14.100

d [mm]	D [mm]	H [mm]	H1 [mm]	H2 [mm]	H5 [mm]	H6 [mm]	L [mm]	L1 [mm]	L2 [mm]	L3 [mm]	L4 [mm]	L5 [mm]	L6 [mm]
New 75	166	262	85	156	70	93	280	218	136	290	70	276	65
New 90	200	281	105	168	78	100	296	259	141	310	70	341	72
New 110	238	292	123	175	86	110	336	287	164	350	120	369	80

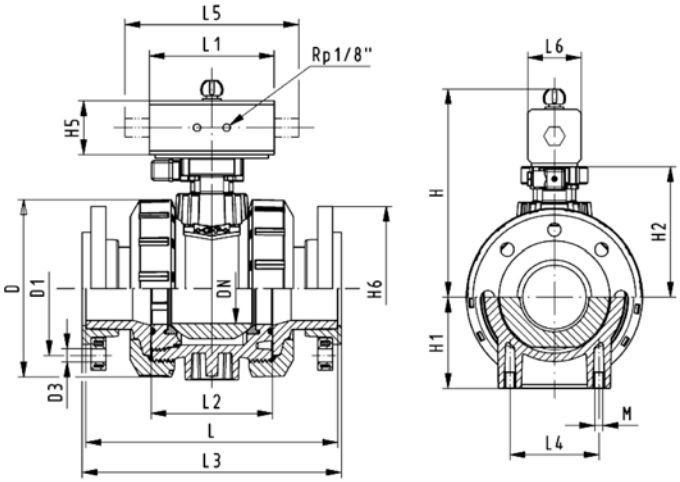

Ball valve type 231 PP-H FO (Fail safe to open)
Without manual override
With backing flanges PP-st metric

Model:

- Assignment of actuators PA11 (DN10/15-25), PA21 (DN32-50), PA30 (DN65), PA35 (DN80), PA40 (DN100)
- Image and drawing DN65-100 please see **New product ball valve DN65-100**
- For easy installation and removal
- Integrated stainless steel mounting inserts
- Control time 90°<) 1-2 s
- Overall length according to EN 558-1
- Connecting dimensions: ISO 7005, EN 1092, BS 4504, DIN 2501; bolt circle PN 10

Option:

- Individual configuration of the valve (see form)

d [mm]	DN [mm]	Inch	PN	kv-value (Δp=1 bar) [l/min]	EPDM Code	FPM Code	kg
New 75	65	2 ½	10	5000	**199 231 349**	**199 231 359**	8.300
New 90	80	3	10	7000	**199 231 350**	**199 231 360**	10.000
New 110	100	4	10	11000	**199 231 351**	**199 231 361**	14.100

d [mm]	D [mm]	H [mm]	H1 [mm]	H2 [mm]	H5 [mm]	H6 [mm]	L [mm]	L1 [mm]	L2 [mm]	L3 [mm]	L4 [mm]	L5 [mm]	L6 [mm]
New 75	166	262	85	156	70	93	280	218	136	290	70	276	65
New 90	200	281	105	168	78	100	296	259	141	310	70	341	72
New 110	238	292	123	175	86	110	336	287	164	350	120	369	80

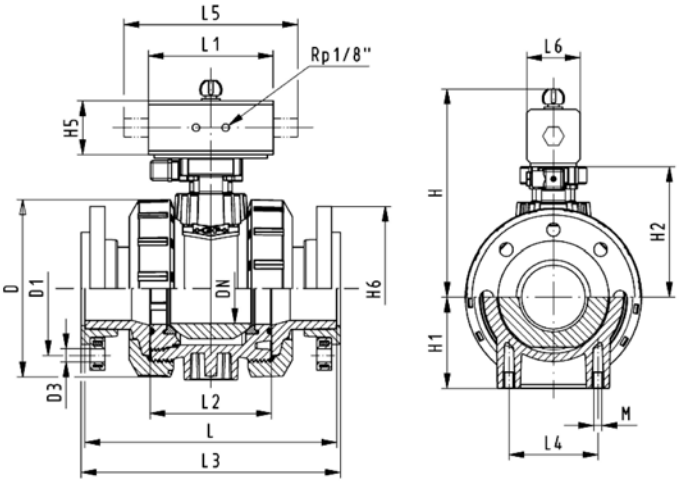

Ball valve type 231 PP-H DA (Double acting)
Without manual override
With backing flanges PP-st metric

Model:

- Assignment of actuators: PA11 (DN10/15-25), PA21 (DN32-50), PA35 (DN65), PA40 (DN80), PA45 (DN100)
- Image and drawing DN65-100 please see **New product ball valve DN65-100**
- For easy installation and removal
- Integrated stainless steel mounting inserts
- Control time 90°<) 1-2 s
- Overall length according to EN 558-1
- Connecting dimensions: ISO 7005, EN 1092, BS 4504, DIN 2501; bolt circle PN 10

Option:

- Individual configuration of the valve (see form)

d [mm]	DN [mm]	Inch	PN	kv-value (Δp=1 bar) [l/min]	EPDM Code	FPM Code	kg
New 75	65	2 ½	10	5000	**199 231 369**	**199 231 379**	7.100
New 90	80	3	10	7000	**199 231 370**	**199 231 380**	9.300
New 110	100	4	10	11000	**199 231 371**	**199 231 381**	12.300

d [mm]	D [mm]	H [mm]	H1 [mm]	H2 [mm]	H5 [mm]	H6 [mm]	L [mm]	L1 [mm]	L2 [mm]	L3 [mm]	L4 [mm]	L5 [mm]	L6 [mm]
New 75	166	257	85	156	66	93	280	144	136	290	70	190	60
New 90	200	274	105	168	70	100	296	152	141	310	70	198	65
New 110	238	273	123	175	78	110	336	169	164	350	120	235	72

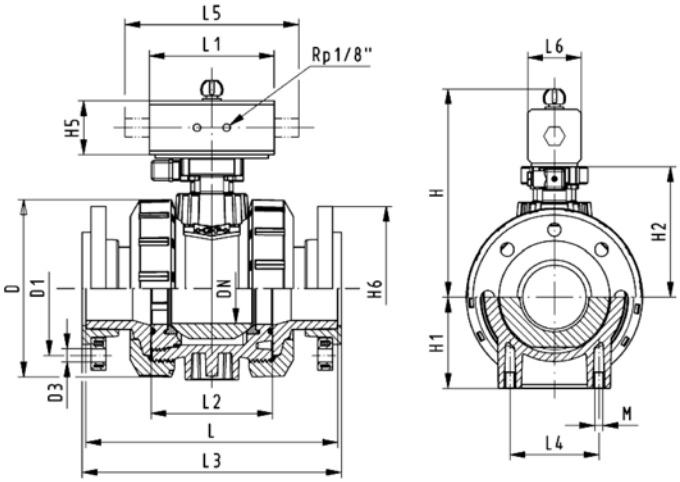

Ball valve type 231 PP-H FC (Fail safe to close)
Without manual override
With backing flanges PP-st ASTM

Model:

- Assignment of actuators PA11 (DN10/15-25), PA21 (DN32-50), PA30 (DN65), PA35 (DN80), PA40 (DN100)
- Image and drawing DN65-100 please see **New product ball valve DN65-100**
- For easy installation and removal
- Integrated stainless steel mounting inserts
- Control time 90°<) 1-2 s
- Overall length according to EN 558-1
- Connecting dimension ANSI/ASME B 16.5 / ASTM D 4024

Option:

- Individual configuration of the valve (see form)

d [mm]	DN [mm]	Inch	PN	kv-value (Δp=1 bar) [l/min]	EPDM Code	FPM Code	kg
New 75	65	2 ½	10	5000	**199 231 729**	**199 231 739**	8.300
New 90	80	3	10	7000	**199 231 730**	**199 231 740**	10.000
New 110	100	4	10	11000	**199 231 731**	**199 231 741**	14.100

d [mm]	D [mm]	H [mm]	H1 [mm]	H2 [mm]	H5 [mm]	H6 [mm]	L [mm]	L1 [mm]	L2 [mm]	L3 [mm]	L4 [mm]	L5 [mm]	L6 [mm]
New 75	166	262	85	156	70	93	280	218	136	290	70	276	65
New 90	200	281	105	168	78	100	296	259	141	310	70	341	72
New 110	238	292	123	175	86	115	336	287	164	350	120	369	80

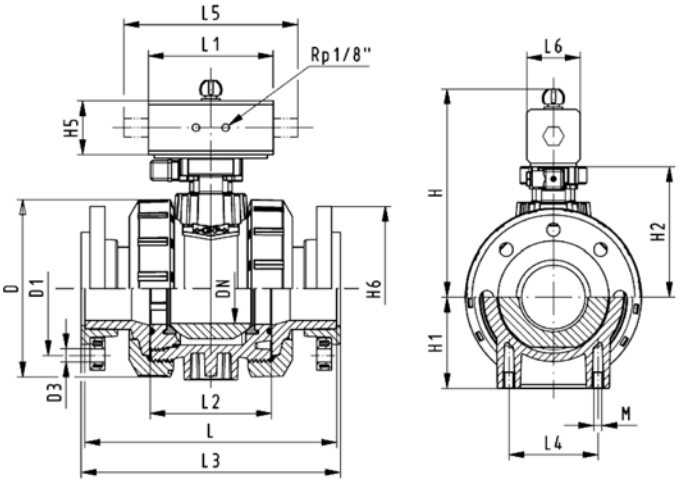

Ball valve type 231 PP-H FO (Fail safe to open)
Without manual override
With backing flanges PP-st ASTM

Model:

- Assignment of actuators PA11 (DN10/15-25), PA21 (DN32-50), PA30 (DN65), PA35 (DN80), PA40 (DN100)
- Image and drawing DN65-100 please see **New product ball valve DN65-100**
- For easy installation and removal
- Integrated stainless steel mounting inserts
- Control time 90°<) 1-2 s
- Overall length according to EN 558-1
- Connecting dimension ANSI/ASME B 16.5 / ASTM D 4024

Option:

- Individual configuration of the valve (see form)

d [mm]	DN [mm]	Inch	PN	kv-value (Δp=1 bar) [l/min]	EPDM Code	FPM Code	kg
New 75	65	2 ½	10	5000	**199 231 749**	**199 231 759**	8.300
New 90	80	3	10	7000	**199 231 750**	**199 231 760**	10.000
New 110	100	4	10	11000	**199 231 751**	**199 231 761**	14.100

d [mm]	D [mm]	H [mm]	H1 [mm]	H2 [mm]	H5 [mm]	H6 [mm]	L [mm]	L1 [mm]	L2 [mm]	L3 [mm]	L4 [mm]	L5 [mm]	L6 [mm]
New 75	166	262	85	156	70	93	280	218	136	290	70	276	65
New 90	200	281	105	168	78	100	296	259	141	310	70	341	72
New 110	238	292	123	175	86	115	336	287	164	350	120	369	80

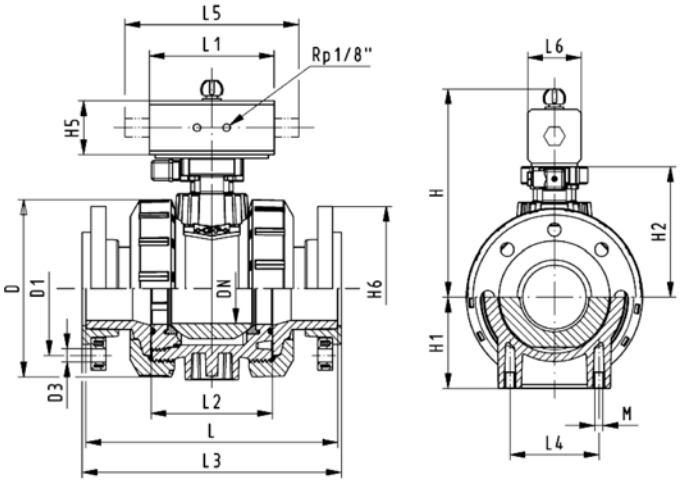

Ball valve type 231 PP-H DA (Double acting)
Without manual override
With backing flanges PP-st ASTM

Model:

- Assignment of actuators: PA11 (DN10/15-25), PA21 (DN32-50), PA35 (DN65), PA40 (DN80), PA45 (DN100)
- Image and drawing DN65-100 please see **New product ball valve DN65-100**
- For easy installation and removal
- Integrated stainless steel mounting inserts
- Control time 90°<) 1-2 s
- Overall length according to EN 558-1
- Connecting dimension ANSI/ASME B 16.5 / ASTM D 4024

Option:

- Individual configuration of the valve (see form)

d [mm]	DN [mm]	Inch	PN	kv-value (Δp=1 bar) [l/min]	EPDM Code	FPM Code	kg	
New 75	65	2 ½	10	5000	**199 231 769**	**199 231 779**	7.100	
New 90	80	3	10	7000	**199 231 770**	**199 231 780**	9.300	
New 110	100	4	10	11000	**199 231 771**	**199 231 781**	12.300	

d [mm]	D [mm]	H [mm]	H1 [mm]	H2 [mm]	H5 [mm]	H6 [mm]	L [mm]	L1 [mm]	L2 [mm]	L3 [mm]	L4 [mm]	L5 [mm]	L6 [mm]	
New 75	166	257	85	156	66	93	280	144	136	290	70	190	60	
New 90	200	274	105	168	70	100	296	152	141	310	70	198	65	
New 110	238	273	123	175	78	115	336	169	164	350	120	235	72	

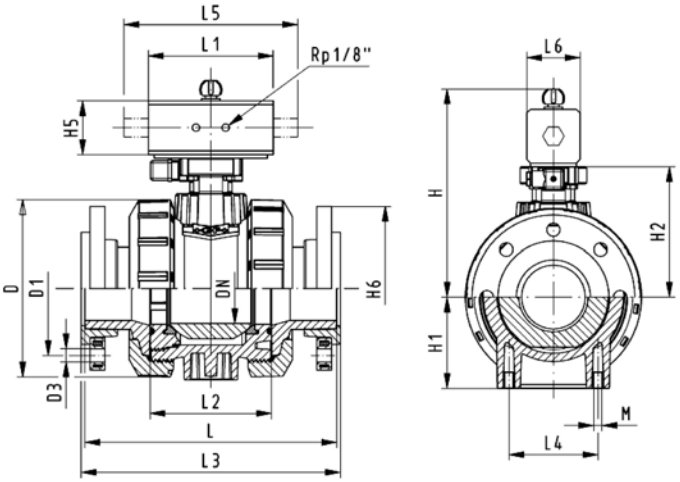

Copiable
Configurator GF ball valve type 546 PP-H

You will find a large selection of different versions in our range of products. New system elements also provide you with new opportunities for use. In order for us to supply exactly the ball valve you need for you application, we have created a selection menu for you.
(The maximum nominal pressure for the ball valve is PN10).
We supply what you put together.

Ball Valve
A01 Ball Valve 546
A02 Linear Ball Valve

Material
B05 PP-H

Dimension

C05	d 16	DN 10	3/8"
C06	d 20	DN 15	1/2"
C07	d 25	DN 20	3/4"
C08	d 32	DN 25	1"
C09	d 40	DN 32	1 1/4"
C10	d 50	DN 40	1 1/2"
C11	d 63	DN 50	2"
C12	d 75	DN 65	2 1/2"
C13	d 90	DN 80	3"
C14	d 110	DN 100	4"
C15	d 160	DN 150	6"

Version
D01 Standard, PTFE ball seal
D02 oilfree, PTFE ball seal (only with specific connecting parts)
D03 silicon-free, PTFE ball seal (only with specific connecting parts)
D04 silicon-free, PVDF ball seal for metric (only with specific connecting parts)

Seals
E01 EPDM seals
E02 FPM seals
E03 FFPM (KALREZ©) seals

Threaded inserts
F01 without threaded inserts
F02 with threaded inserts

Connecting parts
G30 PP-H Fusion socket metric
G32 PP-H Socket fusion spigot metric
G33 PP-H Threaded socket Rp reinforced
G34 PP-H Threaded socket NPT reinforced
G35 PP-H Butt fusion spigot SDR 11 metric IR-PLUS©
G36 PP-H Butt fusion spigot SDR 17.6 metric
with this valve end the maximum nominal pressure is reduced to PN 6
G37 PP-H Butt fusion spigot long SDR11 metric
G83 PP-H Valve end blank
G44 PE-100 Butt fusion spigot long SDR17.6 metric (DN65-100)
G63 Fixed flange PP-H serrated metric (DN10-50)
G72 Backing flange PP-steel metric
G73 Backing flange PP-steel inch ANSI
G77 Backing flange PP JIS with connecting parts
G78 Backing flange PP-GF JIS
G40 PE-100 Fusion socket metric
G41 PE-100 Butt fusion spigot SDR11 metric
G42 PE-100 Butt fusion spigot SDR17.6 metric
G43 PE-100 Butt fusion spigot long SDR11 metric

Multi-functional module
I01 No multi-functional module
I02 Empty module
I03 Module with 2 end switches Ag, Ni
I04 Module with 2 end switches Au
I05 Module with 2 inductive switches Namur
I06 Module with 2 inductive switches PNP
I07 Module with 2 inductive switches NPN

Lever
K01 Standard lever red
K02 Standard lever black
K11 Multi-functional lever red

Mounting plate
L01 without mounting plate
L02 with mounting plate

A01	B05	C	D	E	F	G	G	I	K	L
						left	right			

+GF+

Copiable
GF ball valve type 546 with pneumatic actuator

It's so easy to configurate the type 546:
With the configurator, you have a choice of new pneumatic actuators PA11 and PA21 in 2 optimized sizes including a large range of accessories.

We supply what you put together.

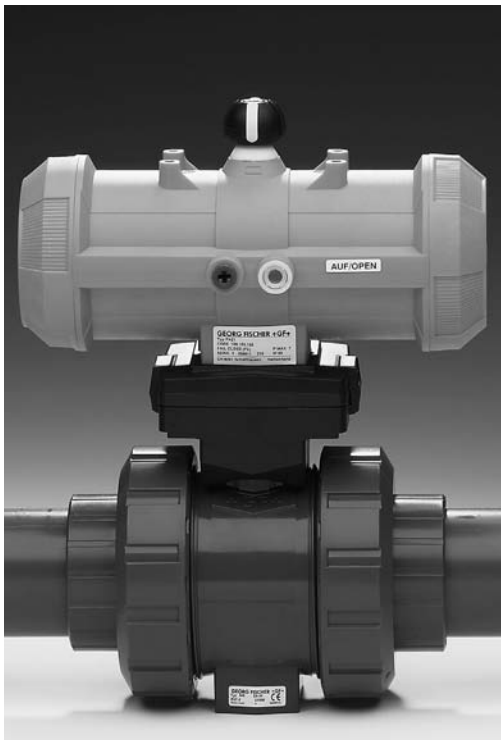

Pneumatic actuators PA11/PA21
P01 Fail safe to close PA11/PA21
P02 Fail safe to open PA11/21
P03 Double acting PA11/21
P30 Fail safe to close PA30/90
P31 Fail safe to open PA30/90
P32 Double acting PA30/90

Manual override
Q01 without manual override
Q02 with manual override

Stroke limiter
R01 without stroke limiter
R02 with stroke limiter

P	Q	R	

Ball valves

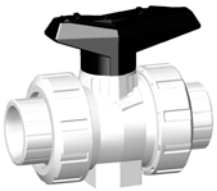

DN10/15 - 50

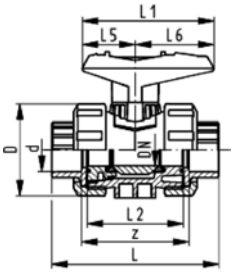

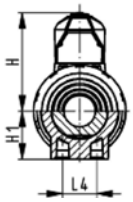

SYGEF® standard
Ball valve type 546 PVDF
With fusion sockets metric

Model:

- For easy installation and removal
- z-dimension, valve end and valve nut are **not compatible** with type 346 (DN10/15-50) resp. type 370 (DN65-100)
- Ball seals PTFE
- Without mounting inserts

Option:

- Individual configuration of the valve (see form)
- Multifunctional module with integrated limit switches
- Pneumatic or electric actuators from +GF+

d [mm]	DN [mm]	PN	kv-value (Δp=1 bar) [l/min]	FPM Code	kg
16	10	16	71	**175 546 011**	0.195
20	15	16	185	**175 546 012**	0.200
25	20	16	350	**175 546 013**	0.300
32	25	16	700	**175 546 014**	0.440
40	32	16	1000	**175 546 015**	0.760
50	40	16	1600	**175 546 016**	1.060
63	50	16	3100	**175 546 017**	2.055

d [mm]	D [mm]	H [mm]	H1 [mm]	L [mm]	L1 [mm]	L2 [mm]	L4 [mm]	L5 [mm]	L6 [mm]	z [mm]
16	50	57	27	93	77	56	25	32	45	67
20	50	57	27	95	77	56	25	32	45	66
25	58	67	30	109	97	65	25	39	58	77
32	68	73	36	119	97	71	25	39	58	83
40	84	90	44	135	128	85	45	54	74	99
50	97	97	51	147	128	89	45	54	74	105
63	124	116	64	168	152	101	45	66	87	117

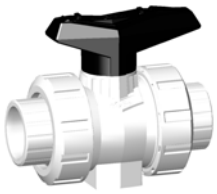

DN10/15 - 50

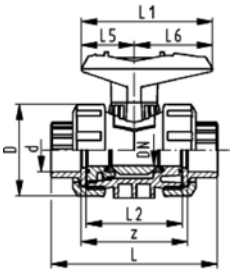

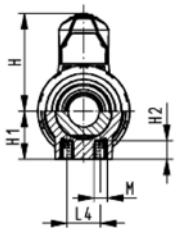

SYGEF® standard
Ball valve type 546 PVDF
With mounting inserts
With fusion sockets metric

Model:

- For easy installation and removal
- z-dimension, valve end and valve nut are **not compatible** with type 346 (DN10/15-50) resp. type 370 (DN65-100)
- Ball seals PTFE
- Integrated stainless steel mounting inserts

Option:

- Individual configuration of the valve (see form)
- Multifunctional module with integrated limit switches
- Pneumatic or electric actuators from +GF+

d [mm]	DN [mm]	PN	kv-value (Δp=1 bar) [l/min]	FPM Code	kg
16	10	16	71	**175 546 411**	0.195
20	15	16	185	**175 546 412**	0.200
25	20	16	350	**175 546 413**	0.300
32	25	16	700	**175 546 414**	0.440
40	32	16	1000	**175 546 415**	0.760
50	40	16	1600	**175 546 416**	1.060
63	50	16	3100	**175 546 417**	2.055

d [mm]	D [mm]	H [mm]	H1 [mm]	H2 [mm]	L [mm]	L1 [mm]	L2 [mm]	L4 [mm]	L5 [mm]	L6 [mm]	M	z [mm]
16	50	79	27	12	93	77	56	25	32	45	M6	67
20	50	57	27	12	95	77	56	25	32	45	M6	66
25	58	67	30	12	109	97	65	25	39	58	M6	77
32	68	73	36	12	119	97	71	25	39	58	M6	83
40	84	90	44	15	135	128	85	45	54	74	M8	99
50	97	97	51	15	147	128	89	45	54	74	M8	105
63	124	116	64	15	168	152	101	45	66	87	M8	117

DN10/15 - 50

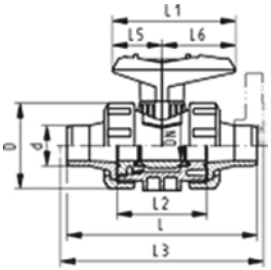

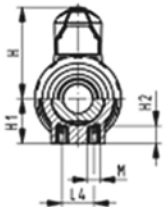

SYGEF® standard
Ball valve type 546 PVDF
With mounting inserts
With socket fusion spigots metric

Model:

- For easy installation and removal
- z-dimension, valve end and valve nut are **not compatible** with type 346 (DN10/15-50) resp. type 370 (DN65-100)
- Ball seals PTFE
- Integrated stainless steel mounting inserts

Option:

- Individual configuration of the valve (see form)
- Multifunctional module with integrated limit switches
- Pneumatic or electric actuators from +GF+

d [mm]	DN [mm]	PN	kv-value (Δp=1 bar) [l/min]	FPM Code	kg
16	10	16	71	**175 546 051**	0.200
20	15	16	185	**175 546 052**	0.205
25	20	16	350	**175 546 053**	0.310
32	25	16	700	**175 546 054**	0.460
40	32	16	1000	**175 546 055**	0.780
50	40	16	1600	**175 546 056**	1.110
63	50	16	3100	**175 546 057**	2.150

d [mm]	D [mm]	H [mm]	H1 [mm]	H2 [mm]	L [mm]	L1 [mm]	L2 [mm]	L3 [mm]	L4 [mm]	L5 [mm]	L6 [mm]	M
16	50	57	27	12	110	77	56		25	32	45	M6
20	50	57	27	12	120	77	56	130	25	32	45	M6
25	58	67	30	12	139	97	65	150	25	39	58	M6
32	68	73	36	12	150	97	71	160	25	39	58	M6
40	84	90	44	15	170	128	85	180	45	54	74	M8
50	97	97	51	15	190	128	89	200	45	54	74	M8
63	124	116	64	15	220	152	101	230	45	66	87	M8

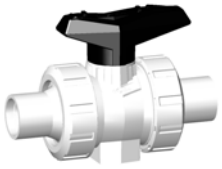

DN10/15 - 50

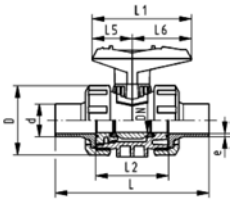

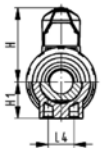

SYGEF® standard
Ball valve type 546 PVDF
With butt fusion spigots metric

Model:

- For easy installation and removal
- z-dimension, valve end and valve nut are **not compatible** with type 346 (DN10/15-50) resp. type 370 (DN65-100)
- Ball seals PTFE
- Without mounting inserts

Option:

- Individual configuration of the valve (see form)
- Multifunctional module with integrated limit switches
- Pneumatic or electric actuators from +GF+

d [mm]	DN [mm]	PN	kv-value (Δp=1 bar) [l/min]	FPM Code	kg
20	15	16	185	**175 546 092**	0.205
25	20	16	350	**175 546 093**	0.310
32	25	16	700	**175 546 094**	0.460
40	32	16	1000	**175 546 095**	0.780
50	40	16	1600	**175 546 096**	1.110
63	50	16	3100	**175 546 097**	2.150

d [mm]	D [mm]	H [mm]	H1 [mm]	L [mm]	L1 [mm]	L2 [mm]	L4 [mm]	L5 [mm]	L6 [mm]	e [mm]
20	50	57	27	130	77	56	25	32	45	1,9
25	58	67	30	143	97	65	25	39	58	1,9
32	68	73	36	150	97	71	25	39	58	2,4
40	84	90	44	171	128	85	45	54	74	2,4
50	97	97	51	191	128	89	45	54	74	3
63	124	116	64	220	152	101	45	66	87	3

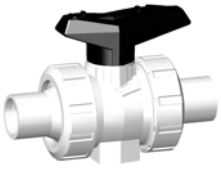

DN10/15 - 50

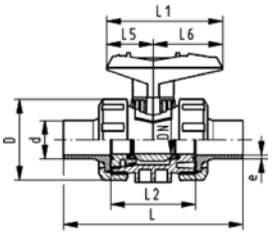

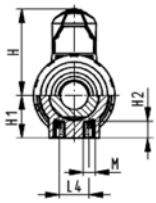

SYGEF® standard
Ball valve type 546 PVDF
With mounting inserts
With butt fusion spigots metric

Model:

- For easy installation and removal
- z-dimension, valve end and valve nut are **not compatible** with type 346 (DN10/15-50) resp. type 370 (DN65-100)
- Ball seals PTFE
- Integrated stainless steel mounting inserts

Option:

- Individual configuration of the valve (see form)
- Multifunctional module with integrated limit switches
- Pneumatic or electric actuators from +GF+

d [mm]	DN [mm]	PN	kv-value (Δp=1 bar) [l/min]	FPM Code	kg
20	15	16	185	**175 546 272**	0.205
25	20	16	350	**175 546 273**	0.310
32	25	16	700	**175 546 274**	0.460
40	32	16	1000	**175 546 275**	0.780
50	40	16	1600	**175 546 276**	1.110
63	50	16	3100	**175 546 277**	2.150

d [mm]	D [mm]	H [mm]	H1 [mm]	H2 [mm]	L [mm]	L1 [mm]	L2 [mm]	L4 [mm]	L5 [mm]	L6 [mm]	M	e [mm]
20	50	57	27	12	130	77	56	25	32	45	M6	1,9
25	58	67	30	12	143	97	65	25	39	58	M6	1,9
32	68	73	36	12	150	97	71	25	39	58	M6	2,4
40	84	90	44	15	171	128	85	45	54	74	M8	2,4
50	97	97	51	15	191	128	89	45	54	74	M8	3
63	124	116	64	15	220	152	101	45	66	87	M8	3

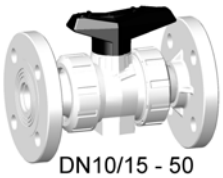

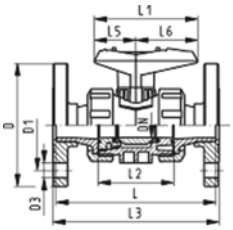

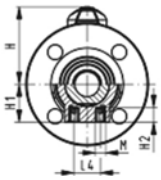

SYGEF® standard
Ball valve type 546 PVDF
With mounting inserts
With fixed flanges PVDF serrated metric

Model:

- For easy installation and removal
- z-dimension, valve end and valve nut are **not compatible** with type 346 (DN10/15-50) resp. type 370 (DN65-100)
- Ball seals PTFE
- Integrated stainless steel mounting inserts
- Overall length EN 558-1

Option:

- Individual configuration of the valve (see form)
- Multifunctional module with integrated limit switches
- Pneumatic or electric actuators from +GF+

d [mm]	DN [mm]	PN	kv-value (Δp=1 bar) [l/min]	FPM Code	kg
20	15	16	185	**175 546 192**	0.470
25	20	16	350	**175 546 193**	0.650
32	25	16	700	**175 546 194**	0.940
40	32	16	1000	**175 546 195**	1.570
50	40	16	1600	**175 546 196**	2.070
63	50	16	3100	**175 546 197**	3.490

d [mm]	D [mm]	D1 [mm]	D3 [mm]	H [mm]	H1 [mm]	H2 [mm]	L [mm]	L1 [mm]	L2 [mm]	L3 [mm]	L4 [mm]	L5 [mm]	L6 [mm]	M
20	93	65	14	57	27	12	120	77	56	130	25	32	45	M6
25	103	75	14	67	30	12	140	97	65	150	25	39	58	M6
32	115	85	14	73	36	12	150	97	71	160	25	39	58	M6
40	137	100	18	90	44	15	170	128	85	180	45	54	74	M8
50	147	110	18	97	51	15	190	128	89	200	45	54	74	M8
63	162	125	18	116	64	15	220	152	101	230	45	66	87	M8

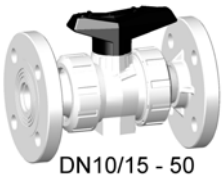

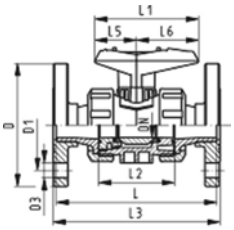

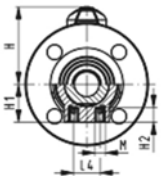

SYGEF® standard
Ball valve type 546 PVDF
With mounting inserts
With fixed flanges PVDF serrated ANSI

Model:

- For easy installation and removal
- z-dimension, valve end and valve nut are **not compatible** with type 346 (DN10/15-50) resp. type 370 (DN65-100)
- Ball seals PTFE
- Integrated stainless steel mounting inserts
- Overall length EN 558-1

Option:

- Individual configuration of the valve (see form)
- Multifunctional module with integrated limit switches
- Pneumatic or electric actuators from +GF+

Inch	DN [mm]	PN	kv-value (Δp=1 bar) [l/min]	FPM Code
½	15	16	185	**175 546 592**
¾	20	16	350	**175 546 593**
1	25	16	700	**175 546 594**
1 ¼	32	16	1000	**175 546 595**
1 ½	40	16	1600	**175 546 596**
2	50	16	3100	**175 546 597**

Inch	D [mm]	D1 [mm]	D3 [mm]	H [mm]	H1 [mm]	H2 [mm]	L [mm]	L1 [mm]	L2 [mm]	L3 [mm]	L4 [mm]	L5 [mm]	L6 [mm]	M
½	93	65	14	57	27	12	120	77	56	130	25	32	45	M6
¾	103	75	14	67	30	12	140	97	65	150	25	39	58	M6
1	115	85	14	73	36	12	150	97	71	160	25	39	58	M6
1 ¼	137	100	18	90	44	15	170	128	85	180	45	54	74	M8
1 ½	147	110	18	97	51	15	190	128	89	200	45	54	74	M8
2	162	125	18	116	64	15	220	152	101	230	45	66	87	M8

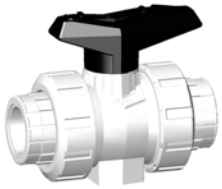

DN10/15 - 50

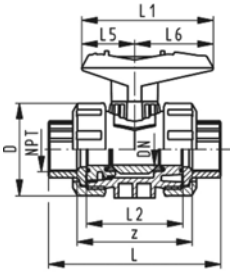

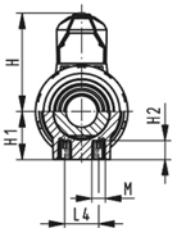

SYGEF® standard
Ball valve type 546 PVDF
With mounting inserts
With threaded sockets NPT

Model:

- For easy installation and removal
- z-dimension, valve end and valve nut are **not compatible** with type 346 (DN10/15-50) resp. type 370 (DN65-100)
- Ball seals PTFE
- Integrated stainless steel mounting inserts

Option:

- Individual configuration of the valve (see form)
- Multifunctional module with integrated limit switches
- Pneumatic or electric actuators from +GF+

NPT [inch]	DN [mm]	PN	kv-value (Δp=1 bar) [l/min]	FPM Code	kg
⅜	10	10	71	**175 546 331**	0.205
½	15	10	185	**175 546 332**	0.220
¾	20	10	350	**175 546 333**	0.325
1	25	10	700	**175 546 334**	0.490
1 ¼	32	10	1000	**175 546 335**	0.820
1 ½	40	10	1600	**175 546 336**	1.135
2	50	10	3100	**175 546 337**	2.150

NPT [inch]	D [mm]	H [mm]	H1 [mm]	H2 [mm]	L [mm]	L1 [mm]	L2 [mm]	L4 [mm]	L5 [mm]	L6 [mm]	M	z [mm]
⅜	50	57	27	12	96	77	56	25	32	45	M6	69
½	50	57	27	12	99	77	56	25	32	45	M6	64
¾	58	67	30	12	111	97	65	25	39	58	M6	76
1	68	73	36	12	127	97	71	25	39	58	M6	83
1 ¼	84	90	44	15	146	128	85	45	54	74	M8	101
1 ½	97	97	51	15	157	128	89	45	54	74	M8	111
2	124	116	64	15	183	152	101	45	66	87	M8	135

DN10/15 - 50

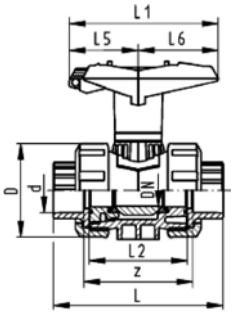

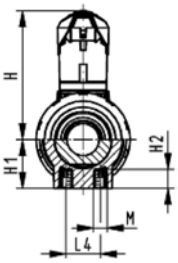

SYGEF® standard
Ball valve type 546 PVDF
With lockable handle
With fusion sockets metric

Model:

- For easy installation and removal
- z-dimension, valve end and valve nut are **not compatible** with type 346 (DN10/15-50) resp. type 370 (DN65-100)
- Ball seals PTFE
- Integrated stainless steel mounting inserts
- Lockable hand lever with ratchet settings

Option:

- Individual configuration of the valve (see form)
- Multifunctional module with integrated limit switches
- Pneumatic or electric actuators from +GF+

d [mm]	DN [mm]	PN	kv-value (Δp=1 bar) [l/min]	FPM Code	kg
16	10	16	71	**175 546 431**	0.205
20	15	16	185	**175 546 432**	0.210
25	20	16	350	**175 546 433**	0.315
32	25	16	700	**175 546 434**	0.455
40	32	16	1000	**175 546 435**	0.785
50	40	16	1600	**175 546 436**	1.085
63	50	16	3100	**175 546 437**	2.085

d [mm]	D [mm]	H [mm]	H1 [mm]	H2 [mm]	L [mm]	L1 [mm]	L2 [mm]	L4 [mm]	L5 [mm]	L6 [mm]	M	z [mm]
16	50	79	27	12	93	77	56	25	32	45	M6	67
20	50	79	27	12	95	77	56	25	32	45	M6	66
25	58	88	30	12	109	97	65	25	39	58	M6	77
32	68	94	36	12	119	97	71	25	39	58	M6	83
40	84	113	44	15	135	128	85	45	54	74	M8	99
50	97	119	51	15	147	128	89	45	54	74	M8	105
63	124	141	64	15	168	152	101	45	66	87	M8	117

Ball valves silicon free/paint compatible

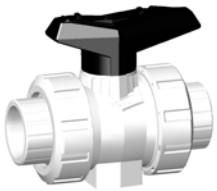

DN10/15 - 50

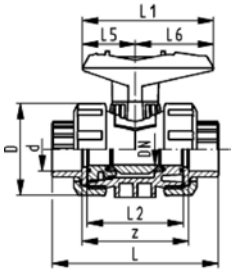

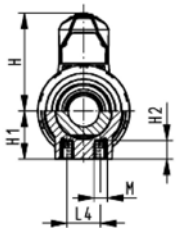

SYGEF® standard silicone free
Ball valve type 546 SF
With fusion sockets metric

Model:

- Silicon-free / paint-compatible
- Ball seals PVDF
- For easy installation and removal
- z-dimension, valve end and valve nut are **not compatible** with type 346 (DN10/15-50) resp. type 370 (DN65-100)
- Integrated stainless steel mounting inserts

Option:

- Individual configuration of the valve (see form)
- Multifunctional module with integrated limit switches
- Pneumatic or electric actuators from +GF+

d [mm]	DN [mm]	PN	kv-value (Δp=1 bar) [l/min]	FPM Code	kg
16	10	16	71	**175 546 691**	0.195
20	15	16	185	**175 546 692**	0.200
25	20	16	350	**175 546 693**	0.300
32	25	16	700	**175 546 694**	0.440
40	32	16	1000	**175 546 695**	0.760
50	40	16	1600	**175 546 696**	1.060
63	50	16	3100	**175 546 697**	2.055

d [mm]	D [mm]	H [mm]	H1 [mm]	H2 [mm]	L [mm]	L1 [mm]	L2 [mm]	L4 [mm]	L5 [mm]	L6 [mm]	M	z [mm]
16	50	79	27	12	93	77	56	25	32	45	M6	67
20	50	57	27	12	95	77	56	25	32	45	M6	66
25	58	67	30	12	109	97	65	25	39	58	M6	77
32	68	73	36	12	119	97	71	25	39	58	M6	83
40	84	90	44	15	135	128	85	45	54	74	M8	99
50	97	97	51	15	147	128	89	45	54	74	M8	105
63	124	116	64	15	168	152	101	45	66	87	M8	117

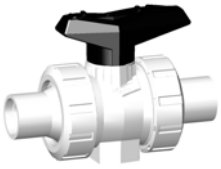

DN10/15 - 50

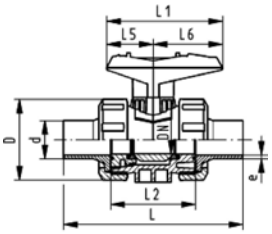

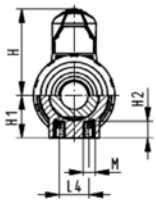

SYGEF® standard silicone free
Ball valve type 546 SF
With butt fusion spigots IR-Plus metric

Model:

- Silicon-free / paint-compatible
- Ball seals PVDF
- For easy installation and removal
- z-dimension, valve end and valve nut are **not compatible** with type 346 (DN10/15-50) resp. type 370 (DN65-100)
- Integrated stainless steel mounting inserts

Option:

- Individual configuration of the valve (see form)
- Multifunctional module with integrated limit switches
- Pneumatic or electric actuators from +GF+

d [mm]	DN [mm]	PN	kv-value (Δp=1 bar) [l/min]	FPM Code	kg
20	15	16	185	**175 546 752**	0.205
25	20	16	350	**175 546 753**	0.310
32	25	16	700	**175 546 754**	0.460
40	32	16	1000	**175 546 755**	0.780
50	40	16	1600	**175 546 756**	1.110
63	50	16	3100	**175 546 757**	2.150

d [mm]	D [mm]	H [mm]	H1 [mm]	H2 [mm]	L [mm]	L1 [mm]	L2 [mm]	L4 [mm]	L5 [mm]	L6 [mm]	M	e [mm]
20	50	57	27	12	130	77	56	25	32	45	M6	1,9
25	58	67	30	12	143	97	65	25	39	58	M6	1,9
32	68	73	36	12	150	97	71	25	39	58	M6	2,4
40	84	90	44	15	171	128	85	45	54	74	M8	2,4
50	97	97	51	15	191	128	89	45	54	74	M8	3
63	124	116	64	15	220	152	101	45	66	87	M8	3

Copiable
Configurator +GF+ Ball Valve Type 546 PVDF

You will find a large selection of different versions in our range of products. New system elements also provide you with new opportunities for use. In order for us to supply exactly the ball valve you need for your application, we put together a selection menu for you (the maximum working pressure of the whole valve is determined by the maximum permissible nominal pressure of the connecting part).
We supply what you put together.

Ball valve
A01 Ball valve 546

Material
B15 PVDF

Dimension
C05 d 16 DN 10 3/8"
C06 d 20 DN 15 1/2"
C07 d 25 DN 20 3/4"
C08 d 32 DN 25 1"
C09 d 40 DN 32 1 1/4"
C10 d 50 DN 40 1 1/2"
C11 d 63 DN 50 2"

Version
D01 standard, PTFE ball seal
D02 oil-free, PTFE ball seal (only with specific connecting parts)
D04 silicon-free, PVDF ball seal (only with specific connecting parts)

Seals
E01 EPDM seals
E02 FPM seals

Threaded inserts
F01 without threaded inserts
F02 with threaded inserts

Connecting parts
G50 PVDF Fusion socket metric
G51 PVDF Socket fusion spigot metric
G52 PVDF Butt fusion spigot IR Plus® metric
G53 PVDF Threaded socket NPT
G64 Fixed flange PVDF serrated metric

Multi-functional module
I01 No multi-functional module
I02 Empty module
I03 Module with 2 limit switches Ag, Ni
I04 Module with 2 limit switches Au
I05 Module with 2 inductive switches Namur
I06 Module with 2 inductive switches PNP
I07 Module with 2 inductive switches NPN

Handle
K01 Standard handle red
K02 Standard handle black
K11 Multi-functional handle red

Mounting plate
L01 without mounting plate
L02 with mounting plate

A01	B15	C	D	E	F	G	G	I	K	L
						left	right			

Ball valves electric

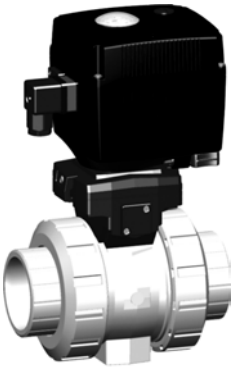

DN10/15 - 50

SYGEF® standard
Ball valve type 107 100-230V
With manual emergency override
With fusion sockets metric

Model:

- Built on with electric actuator EA11
- Voltage 100-230 V, 50-60 Hz
- Control range 90°<)
- Control time 5 s/90°<)
- For easy installation and removal
- Integrated stainless steel mounting inserts

Option:

- Individual configuration of the valve (see form)

d [mm]	DN [mm]	PN	kv-value (Δp=1 bar) [l/min]	FPM Code	kg
16	10	10	70	**199 107 802**	2.100
20	15	10	185	**199 107 803**	2.100
25	20	10	350	**199 107 804**	2.200
32	25	10	700	**199 107 805**	2.300
40	32	10	1000	**199 107 806**	2.600
50	40	10	1600	**199 107 807**	3.000
63	50	10	3100	**199 107 808**	3.800

d [mm]	D [mm]	H [mm]	H1 [mm]	H2 [mm]	H3 [mm]	H5 [mm]	L [mm]	L1 [mm]	L2 [mm]	L4 [mm]	L5 [mm]	L6 [mm]	L7 [mm]	L8 [mm]	z [mm]
16	50	200	27	64	64	137	92	161	56	25	79	83	122	67	64
20	50	200	27	64	64	137	95	161	56	25	79	83	122	67	64
25	58	209	30	73	64	137	110	161	65	25	79	83	122	67	72
32	68	209	36	73	64	137	123	161	71	25	79	83	122	67	79
40	84	220	44	84	64	137	146	161	85	45	79	83	122	67	94
50	97	220	51	84	64	137	157	161	89	45	79	83	122	67	95
63	124	243	64	106	64	137	183	161	101	45	79	83	122	67	107

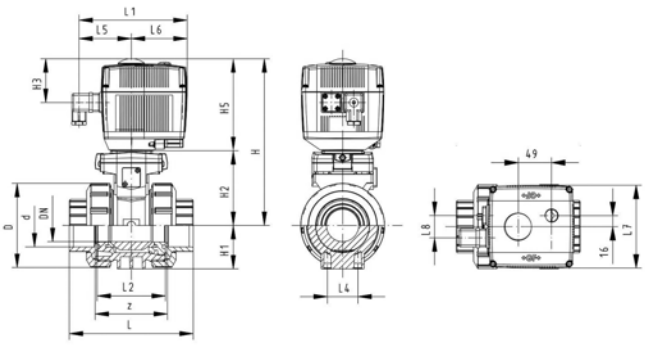

DN10/15 - 50

SYGEF® standard
Ball valve type 107 24V
With manual emergency override
With fusion sockets metric

Model:

- Built on with electric actuator EA11
- Voltage 24 V AC/DC
- Control range 90°<)
- Control time 5 s/90°<)
- For easy installation and removal
- Integrated stainless steel mounting inserts

Option:

- Individual configuration of the valve (see form)

d [mm]	DN [mm]	PN	kv-value (Δp=1 bar) [l/min]	FPM Code	kg
16	10	10	70	**199 107 822**	2.100
20	15	10	185	**199 107 823**	2.100
25	20	10	350	**199 107 824**	2.200
32	25	10	700	**199 107 825**	2.300
40	32	10	1000	**199 107 826**	2.600
50	40	10	1600	**199 107 827**	3.000
63	50	10	3100	**199 107 828**	3.800

d [mm]	D [mm]	H [mm]	H1 [mm]	H2 [mm]	H3 [mm]	H5 [mm]	L [mm]	L1 [mm]	L2 [mm]	L4 [mm]	L5 [mm]	L6 [mm]	L7 [mm]	L8 [mm]	z [mm]
16	50	200	27	64	64	137	92	161	56	25	79	83	122	67	64
20	50	200	27	64	64	137	95	161	56	25	79	83	122	67	64
25	58	209	30	73	64	137	110	161	65	25	79	83	122	67	72
32	68	209	36	73	64	137	123	161	71	25	79	83	122	67	79
40	84	220	44	84	64	137	146	161	85	45	79	83	122	67	94
50	97	220	51	84	64	137	157	161	89	45	79	83	122	67	95
63	124	243	64	106	64	137	183	161	101	45	79	83	122	67	107

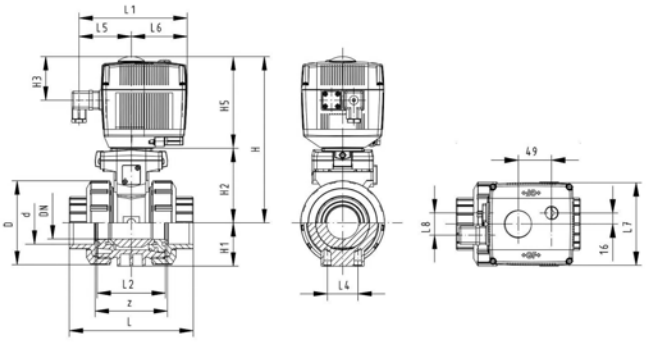

DN10/15 - 50

SYGEF® standard
Ball valve type 107 100-230V
With manual emergency override
With fusion spigots metric

Model:

- Built on with electric actuator EA11
- Voltage 100-230 V, 50-60 Hz
- Control range 90°<)
- Control time 5 s/90°<)
- For easy installation and removal
- Integrated stainless steel mounting inserts

Option:

- Individual configuration of the valve (see form)

d [mm]	DN [mm]	PN	kv-value (Δp=1 bar) [l/min]	FPM Code	kg
16	10	10	70	**199 107 812**	2.100
20	15	10	185	**199 107 813**	2.100
25	20	10	350	**199 107 814**	2.200
32	25	10	700	**199 107 815**	2.300
40	32	10	1000	**199 107 816**	2.600
50	40	10	1600	**199 107 817**	3.000
63	50	10	3100	**199 107 818**	3.800

d [mm]	D [mm]	H [mm]	H1 [mm]	H2 [mm]	H3 [mm]	H5 [mm]	L [mm]	L1 [mm]	L2 [mm]	L3 [mm]	L4 [mm]	L5 [mm]	L6 [mm]	L7 [mm]	L8 [mm]
16	50	200	27	64	64	137	114	161	56	0	25	79	83	122	67
20	50	200	27	64	64	137	124	161	56	130	25	79	83	122	67
25	58	209	30	73	64	137	144	161	65	150	25	79	83	122	67
32	68	209	36	73	64	137	154	161	71	160	25	79	83	122	67
40	84	220	44	84	64	137	174	161	85	180	45	79	83	122	67
50	97	220	51	84	64	137	194	161	89	200	45	79	83	122	67
63	124	243	64	106	64	137	224	161	101	230	45	79	83	122	67

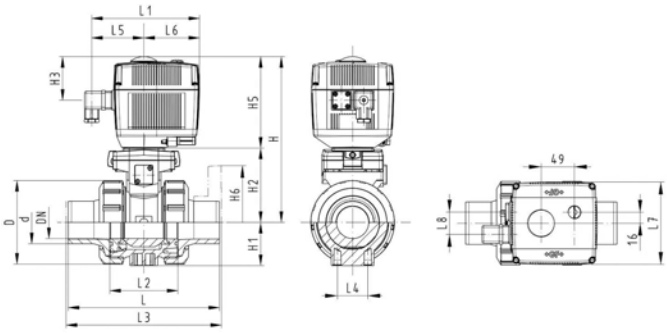

DN10/15 - 50

SYGEF® standard
Ball valve type 107 24V
With manual emergency override
With fusion spigots metric

Model:

- Built on with electric actuator EA11
- Voltage 24 V AC/DC
- Control range 90°<)
- Control time 5 s/90°<)
- For easy installation and removal
- Integrated stainless steel mounting inserts

Option:

- Individual configuration of the valve (see form)

d [mm]	DN [mm]	PN	kv-value (Δp=1 bar) [l/min]	FPM Code	kg
16	10	10	70	**199 107 832**	2.100
20	15	10	185	**199 107 833**	2.100
25	20	10	350	**199 107 834**	2.200
32	25	10	700	**199 107 835**	2.300
40	32	10	1000	**199 107 836**	2.600
50	40	10	1600	**199 107 837**	3.000
63	50	10	3100	**199 107 838**	3.800

d [mm]	D [mm]	H [mm]	H1 [mm]	H2 [mm]	H3 [mm]	H5 [mm]	L [mm]	L1 [mm]	L2 [mm]	L3 [mm]	L4 [mm]	L5 [mm]	L6 [mm]	L7 [mm]	L8 [mm]
16	50	200	27	64	64	137	114	161	56	0	25	79	83	122	67
20	50	200	27	64	64	137	124	161	56	130	25	79	83	122	67
25	58	209	30	73	64	137	144	161	65	150	25	79	83	122	67
32	68	209	36	73	64	137	154	161	71	160	25	79	83	122	67
40	84	220	44	84	64	137	174	161	85	180	45	79	83	122	67
50	97	220	51	84	64	137	194	161	89	200	45	79	83	122	67
63	124	243	64	106	64	137	224	161	101	230	45	79	83	122	67

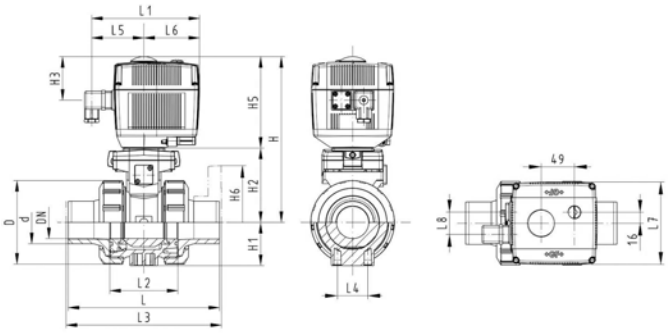

DN10/15 - 50

SYGEF® standard
Ball valve type 107 100-230V
With manual emergency override
With butt fusion spigots metric

Model:

- Built on with electric actuator EA11
- Voltage 100-230 V, 50-60 Hz
- Control range 90°<)
- Control time 5 s/90°<)
- For easy installation and removal
- Integrated stainless steel mounting inserts

Option:

- Individual configuration of the valve (see form)

d [mm]	DN [mm]	PN	kv-value (Δp=1 bar) [l/min]	FPM Code
20	15	10	185	**199 107 423**
25	20	10	350	**199 107 424**
32	25	10	700	**199 107 425**
40	32	10	1000	**199 107 426**
50	40	10	1600	**199 107 427**
63	50	10	3100	**199 107 428**

d [mm]	D [mm]	H [mm]	H1 [mm]	H2 [mm]	H3 [mm]	H5 [mm]	L [mm]	L1 [mm]	L2 [mm]	L4 [mm]	L5 [mm]	L6 [mm]	L7 [mm]	L8 [mm]
20	50	200	27	64	64	137	130	161	56	25	79	83	122	67
25	58	209	30	73	64	137	143	161	65	25	79	83	122	67
32	68	209	36	73	64	137	150	161	71	25	79	83	122	67
40	84	220	44	84	64	137	171	161	85	45	79	83	122	67
50	97	220	51	84	64	137	191	161	89	45	79	83	122	67
63	124	243	64	106	64	137	220	161	101	45	79	83	122	67

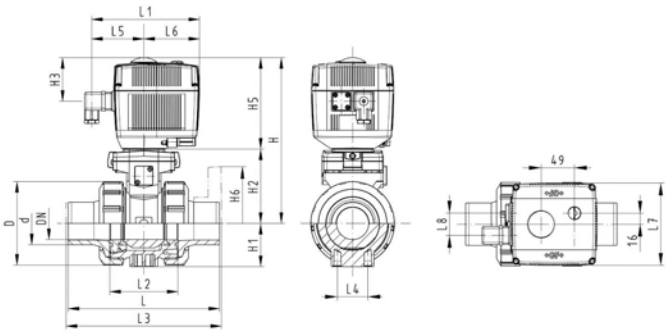

DN10/15 - 50

SYGEF® standard
Ball valve type 107 24V
With manual emergency override
With butt fusion spigots metric

Model:

- Built on with electric actuator EA11
- Voltage 24 V AC/DC
- Control range 90°<)
- Control time 5 s/90°<)
- For easy installation and removal
- Integrated stainless steel mounting inserts

Option:

- Individual configuration of the valve (see form)

d [mm]	DN [mm]	PN	kv-value (Δp=1 bar) [l/min]	FPM Code
20	15	10	185	**199 107 433**
25	20	10	350	**199 107 434**
32	25	10	700	**199 107 435**
40	32	10	1000	**199 107 436**
50	40	10	1600	**199 107 437**
63	50	10	3100	**199 107 438**

d [mm]	D [mm]	H [mm]	H1 [mm]	H2 [mm]	H3 [mm]	H5 [mm]	L [mm]	L1 [mm]	L2 [mm]	L4 [mm]	L5 [mm]	L6 [mm]	L7 [mm]	L8 [mm]
20	50	200	27	64	64	137	130	161	56	25	79	83	122	67
25	58	209	30	73	64	137	143	161	65	25	79	83	122	67
32	68	209	36	73	64	137	150	161	71	25	79	83	122	67
40	84	220	44	84	64	137	171	161	85	45	79	83	122	67
50	97	220	51	84	64	137	191	161	89	45	79	83	122	67
63	124	243	64	106	64	137	220	161	101	45	79	83	122	67

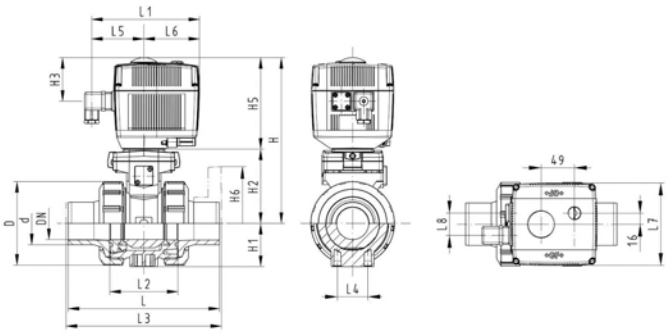

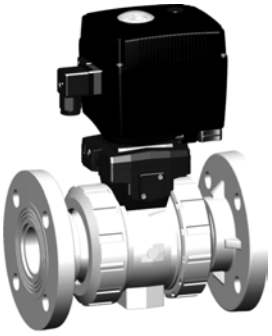

DN10/15 - 50

SYGEF® standard
Ball valve type 107 100-230V
With manual emergency override
With fixed flanges PVDF serrated metric

Model:

- Built on with electric actuator EA11
- Voltage 100-230 V, 50-60 Hz
- Control range 90°<)
- Control time 5 s/90°<)
- For easy installation and removal
- Integrated stainless steel mounting inserts
- Overall length EN 558-1
- Connecting dimensions: ISO 7005 / EN 1092 / DIN 2501 PN10 / BS4504

Option:

- Individual configuration of the valve (see form)

d [mm]	DN [mm]	Inch	PN	kv-value (Δp=1 bar) [l/min]	FPM Code	kg
20	15	½	10	185	**199 107 843**	2.300
25	20	¾	10	350	**199 107 844**	2.500
32	25	1	10	700	**199 107 845**	2.700
40	32	1 ¼	10	1000	**199 107 846**	3.200
50	40	1 ½	10	1600	**199 107 847**	3.700
63	50	2	10	3100	**199 107 848**	4.800

d [mm]	D [mm]	H [mm]	H1 [mm]	H2 [mm]	H3 [mm]	H5 [mm]	H6 [mm]	L [mm]	L1 [mm]	L2 [mm]	L3 [mm]	L4 [mm]	L5 [mm]	L6 [mm]	L7 [mm]
20	50	201	27	64	65	138	48	124	160	56	130	25	77	83	122
25	58	210	30	73	65	138	53	144	160	65	150	25	77	83	122
32	68	210	36	73	65	138	58	154	160	71	160	25	77	83	122
40	84	221	44	84	65	138	70	174	160	85	180	45	77	83	122
50	97	221	51	84	65	138	75	194	160	89	200	45	77	83	122
63	124	244	64	106	65	138	83	224	160	101	230	45	77	83	122

d [mm]	L8 [mm]
20	33
25	33
32	33
40	33
50	33
63	33

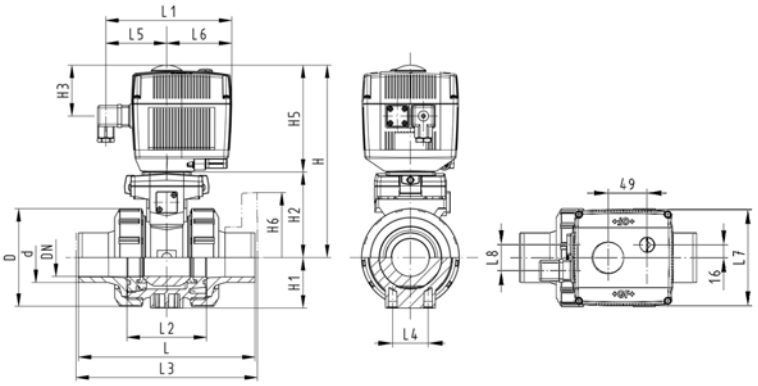

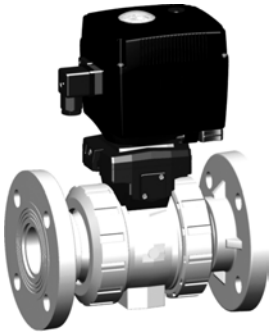

DN10/15 - 50

SYGEF® standard
Ball valve type 107 24V
With manual emergency override
With fixed flanges PVDF serrated metric

Model:

- Built on with electric actuator EA11
- Voltage 24 V AC/DC
- Control range 90°<)
- Control time 5 s/90°<)
- For easy installation and removal
- Integrated stainless steel mounting inserts
- Overall length EN 558-1
- Connecting dimensions: ISO 7005 / EN 1092 / DIN 2501 PN10 / BS4504

Option:

- Individual configuration of the valve (see form)

d [mm]	DN [mm]	Inch	PN	kv-value (Δp=1 bar) [l/min]	FPM Code	kg
20	15	½	10	185	**199 107 853**	2.300
25	20	¾	10	350	**199 107 854**	2.500
32	25	1	10	700	**199 107 855**	2.700
40	32	1 ¼	10	1000	**199 107 856**	3.200
50	40	1 ½	10	1600	**199 107 857**	3.700
63	50	2	10	3100	**199 107 858**	4.800

d [mm]	D [mm]	H [mm]	H1 [mm]	H2 [mm]	H3 [mm]	H5 [mm]	H6 [mm]	L [mm]	L1 [mm]	L2 [mm]	L3 [mm]	L4 [mm]	L5 [mm]	L6 [mm]	L7 [mm]
20	50	201	27	64	65	138	48	124	160	56	130	25	77	83	122
25	58	210	30	73	65	138	53	144	160	65	150	25	77	83	122
32	68	210	36	73	65	138	58	154	160	71	160	25	77	83	122
40	84	221	44	84	65	138	70	174	160	85	180	45	77	83	122
50	97	221	51	84	65	138	75	194	160	89	200	45	77	83	122
63	124	244	64	106	65	138	83	224	160	101	230	45	77	83	122

d [mm]	L8 [mm]
20	33
25	33
32	33
40	33
50	33
63	33

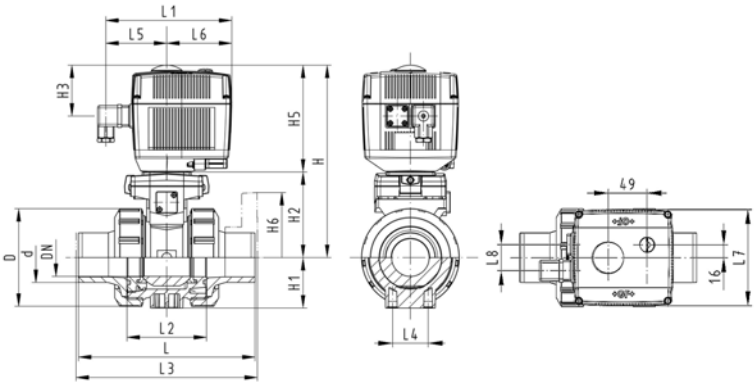

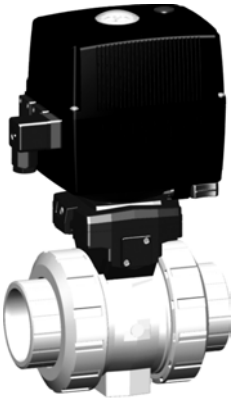

DN10/15 - 50

SYGEF® standard
Ball valve type 132 100-230V
With manual emergency override
With fusion sockets metric

Model:

- Assignment of actuators EA21 (DN10/15-50), EA31 (DN65-100 if available)
- Voltage 100-230 V, 50-60 Hz
- Control range 90°<)
- Control time 5 s/90°<)
- For easy installation and removal
- Integrated stainless steel mounting inserts

Option:

- Individual configuration of the valve (see form)

d [mm]	DN [mm]	PN	kv-value (Δp=1 bar) [l/min]	FPM Code	kg
16	10	10	70	**199 132 012**	2.100
20	15	10	185	**199 132 013**	2.100
25	20	10	350	**199 132 014**	2.200
32	25	10	700	**199 132 015**	2.300
40	32	10	1000	**199 132 016**	2.600
50	40	10	1600	**199 132 017**	3.000
63	50	10	3100	**199 132 018**	3.800

d [mm]	D [mm]	H [mm]	H1 [mm]	H2 [mm]	H3 [mm]	H5 [mm]	L [mm]	L1 [mm]	L2 [mm]	L4 [mm]	L5 [mm]	L6 [mm]	L7 [mm]	L8 [mm]	z [mm]
16	50	231	27	64	94	167	92	180	56	25	97	83	122	66	64
20	50	231	27	64	94	167	95	180	56	25	97	83	122	66	64
25	58	240	30	73	94	167	110	180	65	25	97	83	122	66	72
32	68	240	36	73	94	167	123	180	71	25	97	83	122	66	79
40	84	251	44	84	94	167	146	180	85	45	97	83	122	66	94
50	97	251	51	84	94	167	157	180	89	45	97	83	122	66	95
63	124	273	64	106	94	167	183	180	101	45	97	83	122	66	107

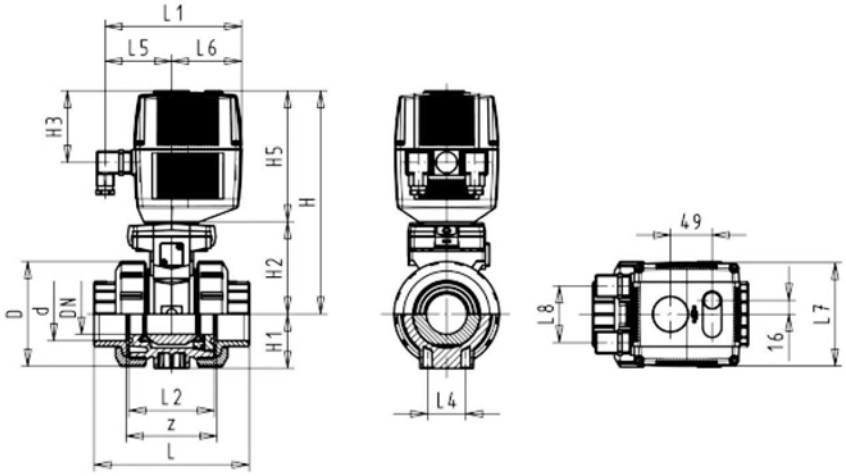

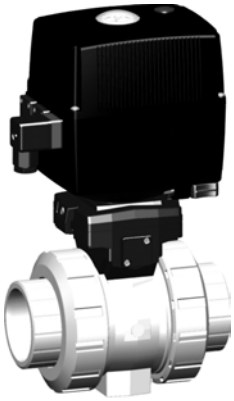

DN10/15 - 50

SYGEF® standard
Ball valve type 132 24V
With manual emergency override
With fusion sockets metric

Model:

- Assignment of actuators EA21 (DN10/15-50), EA31 (DN65-100 if available)
- Voltage 24 V AC/DC
- Control range 90°<)
- Control time 5 s/90°<)
- For easy installation and removal
- Integrated stainless steel mounting inserts

Option:

- Individual configuration of the valve (see form)

d [mm]	DN [mm]	PN	kv-value (Δp=1 bar) [l/min]	FPM Code	kg
16	10	10	70	**199 132 052**	2.100
20	15	10	185	**199 132 053**	2.100
25	20	10	350	**199 132 054**	2.200
32	25	10	700	**199 132 055**	2.300
40	32	10	1000	**199 132 056**	2.600
50	40	10	1600	**199 132 057**	3.000
63	50	10	3100	**199 132 058**	3.800

d [mm]	D [mm]	H [mm]	H1 [mm]	H2 [mm]	H3 [mm]	H5 [mm]	L [mm]	L1 [mm]	L2 [mm]	L4 [mm]	L5 [mm]	L6 [mm]	L7 [mm]	L8 [mm]	z [mm]
16	50	231	27	64	94	167	92	180	56	25	97	83	122	66	64
20	50	231	27	64	94	167	95	180	56	25	97	83	122	66	64
25	58	240	30	73	94	167	110	180	65	25	97	83	122	66	72
32	68	240	36	73	94	167	123	180	71	25	97	83	122	66	79
40	84	251	44	84	94	167	146	180	85	45	97	83	122	66	94
50	97	251	51	84	94	167	157	180	89	45	97	83	122	66	95
63	124	273	64	106	94	167	183	180	101	45	97	83	122	66	107

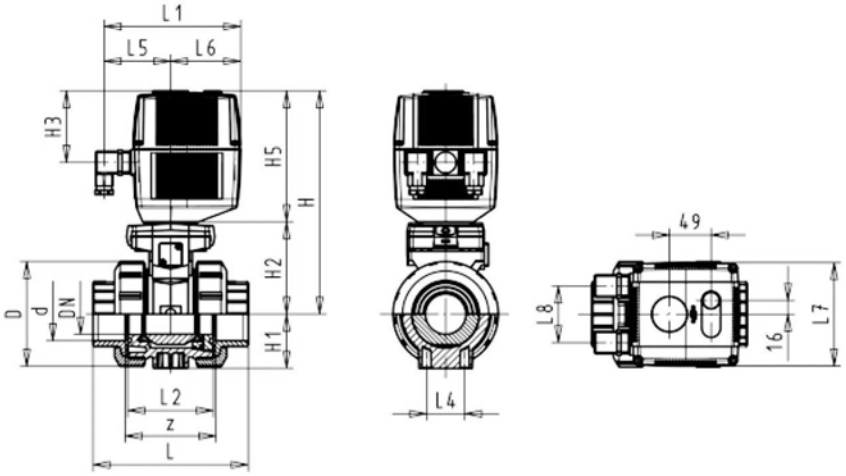

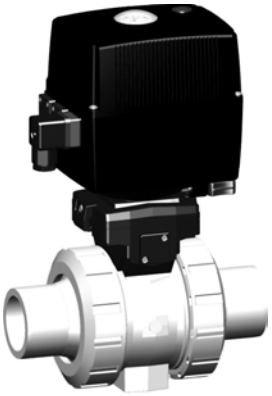

DN10/15 - 50

SYGEF® standard
Ball valve type 132 100-230V
With manual emergency override
With fusion spigots metric

Model:

- Assignment of actuators EA21 (DN10/15-50), EA31 (DN65-100 if available)
- Voltage 100-230 V, 50-60 Hz
- Control range 90°<)
- Control time 5 s/90°<)
- For easy installation and removal
- Integrated stainless steel mounting inserts

Option:

- Individual configuration of the valve (see form)

d [mm]	DN [mm]	PN	kv-value (Δp=1 bar) [l/min]	FPM Code	kg
16	10	10	70	**199 132 032**	2.100
20	15	10	185	**199 132 033**	2.100
25	20	10	350	**199 132 034**	2.200
32	25	10	700	**199 132 035**	2.300
40	32	10	1000	**199 132 036**	2.600
50	40	10	1600	**199 132 037**	3.000
63	50	10	3100	**199 132 038**	3.800

d [mm]	D [mm]	H [mm]	H1 [mm]	H2 [mm]	H3 [mm]	H5 [mm]	L [mm]	L1 [mm]	L2 [mm]	L3 [mm]	L4 [mm]	L5 [mm]	L6 [mm]	L7 [mm]	L8 [mm]
16	50	231	27	64	94	167	114	180	56	130	25	97	83	122	66
20	50	231	27	64	94	167	124	180	56	130	25	97	83	122	66
25	58	240	30	73	94	167	144	180	65	150	25	97	83	122	66
32	68	240	36	73	94	167	154	180	71	160	25	97	83	122	66
40	84	251	44	84	94	167	174	180	85	180	45	97	83	122	66
50	97	251	51	84	94	167	194	180	89	200	45	97	83	122	66
63	124	273	64	106	94	167	224	180	101	230	45	97	83	122	66

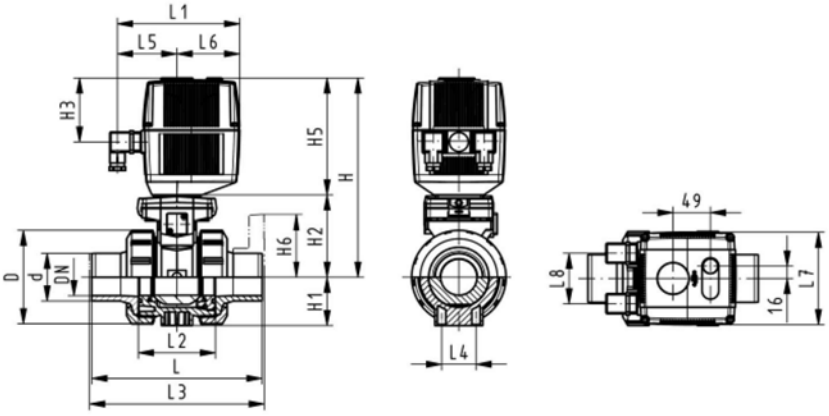

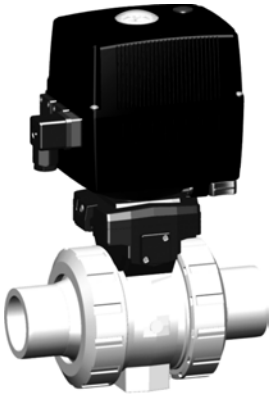

DN10/15 - 50

SYGEF® standard
Ball valve type 132 24V
With manual emergency override
With fusion spigots metric

Model:

- Assignment of actuators EA21 (DN10/15-50), EA31 (DN65-100 if available)
- Voltage 24 V AC/DC
- Control range 90°<)
- Control time 5 s/90°<)
- For easy installation and removal
- Integrated stainless steel mounting inserts

Option:

- Individual configuration of the valve (see form)

d [mm]	DN [mm]	PN	kv-value (Δp=1 bar) [l/min]	FPM Code	kg
16	10	10	70	**199 132 072**	2.100
20	15	10	185	**199 132 073**	2.100
25	20	10	350	**199 132 074**	2.200
32	25	10	700	**199 132 075**	2.300
40	32	10	1000	**199 132 076**	2.600
50	40	10	1600	**199 132 077**	3.000
63	50	10	3100	**199 132 078**	3.800

d [mm]	D [mm]	H [mm]	H1 [mm]	H2 [mm]	H3 [mm]	H5 [mm]	L [mm]	L1 [mm]	L2 [mm]	L3 [mm]	L4 [mm]	L5 [mm]	L6 [mm]	L7 [mm]	L8 [mm]
16	50	231	27	64	94	167	114	180	56	130	25	97	83	122	66
20	50	231	27	64	94	167	124	180	56	130	25	97	83	122	66
25	58	240	30	73	94	167	144	180	65	150	25	97	83	122	66
32	68	240	36	73	94	167	154	180	71	160	25	97	83	122	66
40	84	251	44	84	94	167	174	180	85	180	45	97	83	122	66
50	97	251	51	84	94	167	194	180	89	200	45	97	83	122	66
63	124	273	64	106	94	167	224	180	101	230	45	97	83	122	66

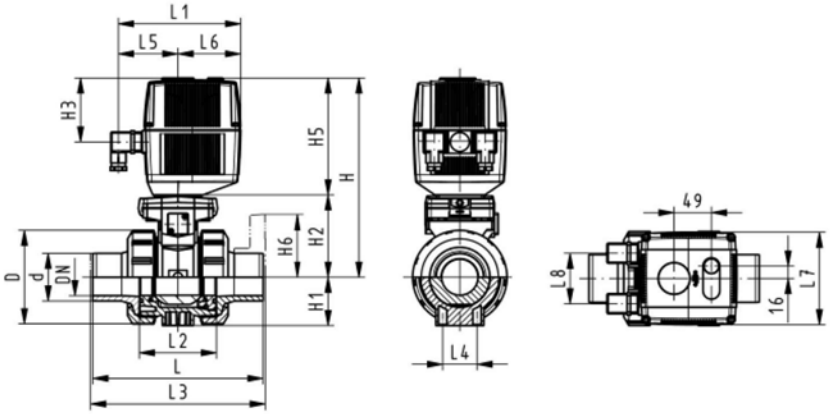

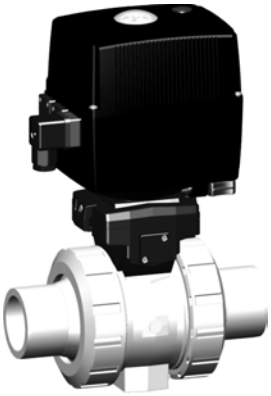

DN10/15 - 50

SYGEF® standard
Ball valve type 132 100-230V
With manual emergency override
With butt fusion spigots metric

Model:

- Assignment of actuators EA21 (DN10/15-50), EA31 (DN65-100 if available)
- Voltage 100-230 V, 50-60 Hz
- Control range 90°<)
- Control time 5 s/90°<)
- For easy installation and removal
- Integrated stainless steel mounting inserts

Option:

- Individual configuration of the valve (see form)

d [mm]	DN [mm]	PN	kv-value (Δp=1 bar) [l/min]	FPM Code
20	15	10	185	**199 132 113**
25	20	10	350	**199 132 114**
32	25	10	700	**199 132 115**
40	32	10	1000	**199 132 116**
50	40	10	1600	**199 132 117**
63	50	10	3100	**199 132 118**

d [mm]	D [mm]	H [mm]	H1 [mm]	H2 [mm]	H3 [mm]	H5 [mm]	L [mm]	L1 [mm]	L2 [mm]	L4 [mm]	L5 [mm]	L6 [mm]	L7 [mm]	L8 [mm]
20	50	231	27	64	94	167	130	180	56	25	97	83	122	66
25	58	240	30	73	94	167	143	180	65	25	97	83	122	66
32	68	240	36	73	94	167	150	180	71	25	97	83	122	66
40	84	251	44	84	94	167	171	180	85	45	97	83	122	66
50	97	251	51	84	94	167	191	180	89	45	97	83	122	66
63	124	273	64	106	94	167	220	180	101	45	97	83	122	66

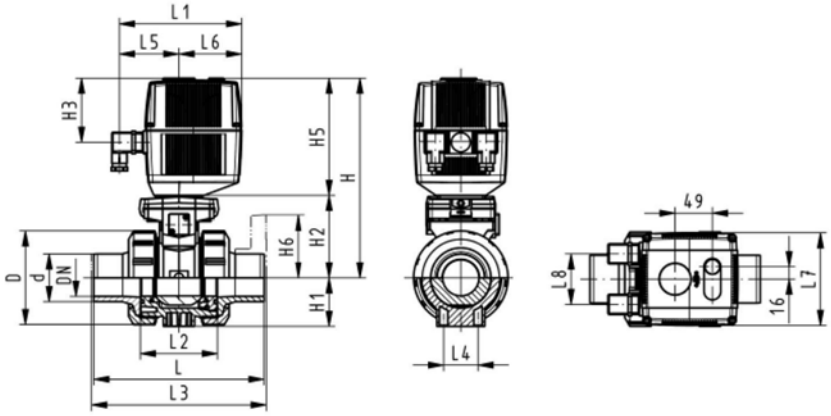

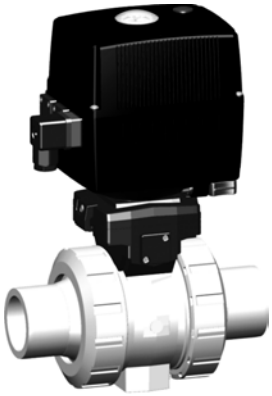

DN10/15 - 50

SYGEF® standard
Ball valve type 132 24V
With manual emergency override
With butt fusion spigots metric

Model:

- Assignment of actuators EA21 (DN10/15-50), EA31 (DN65-100 if available)
- Voltage 24 V AC/DC
- Control range 90°<)
- Control time 5 s/90°<)
- For easy installation and removal
- Integrated stainless steel mounting inserts

Option:

- Individual configuration of the valve (see form)

d [mm]	DN [mm]	PN	kv-value (Δp=1 bar) [l/min]	FPM Code
20	15	10	185	**199 132 153**
25	20	10	350	**199 132 154**
32	25	10	700	**199 132 155**
40	32	10	1000	**199 132 156**
50	40	10	1600	**199 132 157**
63	50	10	3100	**199 132 158**

d [mm]	D [mm]	H [mm]	H1 [mm]	H2 [mm]	H3 [mm]	H5 [mm]	L [mm]	L1 [mm]	L2 [mm]	L4 [mm]	L5 [mm]	L6 [mm]	L7 [mm]	L8 [mm]
20	50	231	27	64	94	167	130	180	56	25	97	83	122	66
25	58	240	30	73	94	167	143	180	65	25	97	83	122	66
32	68	240	36	73	94	167	150	180	71	25	97	83	122	66
40	84	251	44	84	94	167	171	180	85	45	97	83	122	66
50	97	251	51	84	94	167	191	180	89	45	97	83	122	66
63	124	273	64	106	94	167	220	180	101	45	97	83	122	66

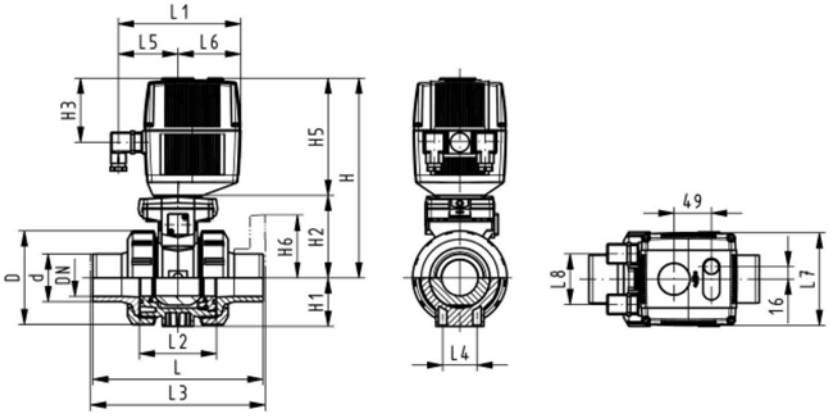

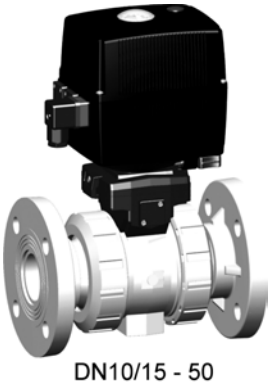

DN10/15 - 50

SYGEF® standard
Ball valve type 132 100-230V
With manual emergency override
With fixed flanges PVDF serrated metric

Model:

- Assignment of actuators EA21 (DN10/15-50), EA31 (DN65-100 if available)
- Voltage 100-230 V, 50-60 Hz
- Control range 90°<)
- Control time 5 s/90°<)
- For easy installation and removal
- Integrated stainless steel mounting inserts
- Overall length EN 558-1
- Connecting dimensions: ISO 7005 / EN 1092 / DIN 2501 PN10 / BS4504

Option:

- Individual configuration of the valve (see form)

d [mm]	DN [mm]	Inch	PN	kv-value (Δp=1 bar) [l/min]	FPM Code	kg
20	15	½	10	185	**199 132 083**	2.300
25	20	¾	10	350	**199 132 084**	2.500
32	25	1	10	700	**199 132 085**	2.700
40	32	1 ¼	10	1000	**199 132 086**	3.200
50	40	1 ½	10	1600	**199 132 087**	3.700
63	50	2	10	3100	**199 132 088**	4.800

d [mm]	D [mm]	H [mm]	H1 [mm]	H2 [mm]	H3 [mm]	H5 [mm]	H6 [mm]	L [mm]	L1 [mm]	L2 [mm]	L3 [mm]	L4 [mm]	L5 [mm]	L6 [mm]	L7 [mm]
20	50	231	27	64	94	167	48	124	180	56	130	25	98	83	122
25	58	240	30	73	94	167	53	144	180	65	150	25	97	83	122
32	68	240	36	73	94	167	58	154	180	71	160	25	97	83	122
40	84	251	44	84	94	167	70	174	180	85	180	45	97	83	122
50	97	251	51	84	94	167	75	194	180	89	200	45	98	83	122
63	124	273	64	106	94	167	83	224	180	101	230	45	97	83	122

d [mm]	L8 [mm]
20	66
25	66
32	66
40	66
50	66
63	66

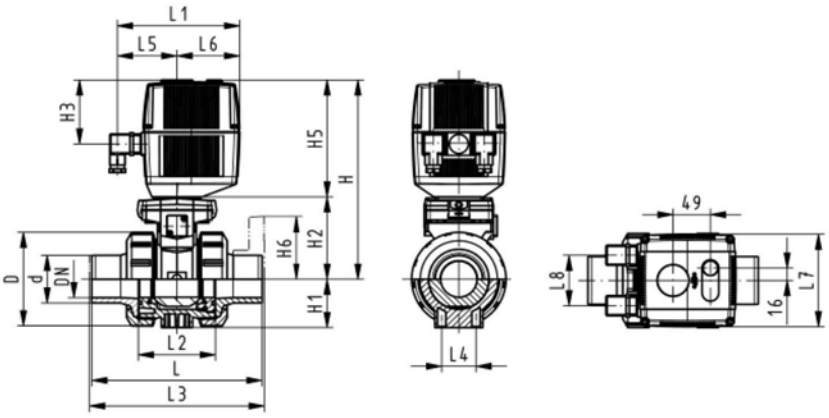

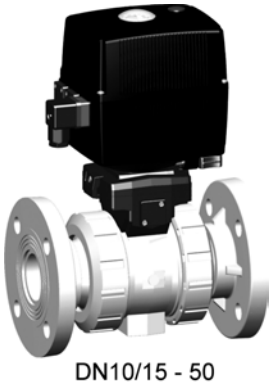

DN10/15 - 50

SYGEF® standard
Ball valve type 132 24V
With manual emergency override
With fixed flanges PVDF serrated metric

Model:

- Assignment of actuators EA21 (DN10/15-50), EA31 (DN65-100 if available)
- Voltage 24 V AC/DC
- Control range 90°<)
- Control time 5 s/90°<)
- For easy installation and removal
- Integrated stainless steel mounting inserts
- Overall length EN 558-1
- Connecting dimensions: ISO 7005 / EN 1092 / DIN 2501 PN10 / BS4504

Option:

- Individual configuration of the valve (see form)

d [mm]	DN [mm]	Inch	PN	kv-value (Δp=1 bar) [l/min]	FPM Code	kg
20	15	½	10	185	**199 132 093**	2.300
25	20	¾	10	350	**199 132 094**	2.500
32	25	1	10	700	**199 132 095**	2.700
40	32	1 ¼	10	1000	**199 132 096**	3.200
50	40	1 ½	10	1600	**199 132 097**	3.700
63	50	2	10	3100	**199 132 098**	4.800

d [mm]	D [mm]	H [mm]	H1 [mm]	H2 [mm]	H3 [mm]	H5 [mm]	H6 [mm]	L [mm]	L1 [mm]	L2 [mm]	L3 [mm]	L4 [mm]	L5 [mm]	L6 [mm]	L7 [mm]
20	50	231	27	64	94	167	48	124	180	56	130	25	98	83	122
25	58	240	30	73	94	167	53	144	180	65	150	25	97	83	122
32	68	240	36	73	94	167	58	154	180	71	160	25	97	83	122
40	84	251	44	84	94	167	70	174	180	85	180	45	97	83	122
50	97	251	51	84	94	167	75	194	180	89	200	45	98	83	122
63	124	273	64	106	94	167	83	224	180	101	230	45	97	83	122

d [mm]	L8 [mm]
20	66
25	66
32	66
40	66
50	66
63	66

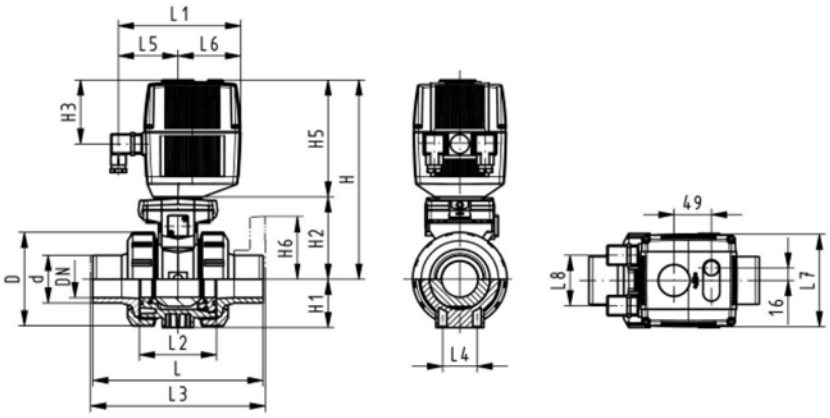

Copiable
Configurator +GF+ Ball Valve Type 546 PVDF

You will find a large selection of different versions in our range of products. New system elements also provide you with new opportunities for use. In order for us to supply exactly the ball valve you need for your application, we put together a selection menu for you (the maximum working pressure of the whole valve is determined by the maximum permissible nominal pressure of the connecting part).
We supply what you put together.

Ball valve
A01 Ball valve 546

Material
B15 PVDF

Dimension
C05 d 16 DN 10 3/8"
C06 d 20 DN 15 1/2"
C07 d 25 DN 20 3/4"
C08 d 32 DN 25 1"
C09 d 40 DN 32 1 1/4"
C10 d 50 DN 40 1 1/2"
C11 d 63 DN 50 2"

Version
D01 standard, PTFE ball seal
D02 oil-free, PTFE ball seal (only with specific connecting parts)
D04 silicon-free, PVDF ball seal (only with specific connecting parts)

Seals
E01 EPDM seals
E02 FPM seals

Threaded inserts
F01 without threaded inserts
F02 with threaded inserts

Connecting parts
G50 PVDF Fusion socket metric
G51 PVDF Socket fusion spigot metric
G52 PVDF Butt fusion spigot IR Plus® metric
G53 PVDF Threaded socket NPT
G64 Fixed flange PVDF serrated metric

Multi-functional module
I01 No multi-functional module
I02 Empty module
I03 Module with 2 limit switches Ag, Ni
I04 Module with 2 limit switches Au
I05 Module with 2 inductive switches Namur
I06 Module with 2 inductive switches PNP
I07 Module with 2 inductive switches NPN

Handle
K01 Standard handle red
K02 Standard handle black
K11 Multi-functional handle red

Mounting plate
L01 without mounting plate
L02 with mounting plate

A01	B15	C	D	E	F	G	G	I	K	L
						left	right			

Copiable
GF ball valve type 546 with electric Actuator

It's easy to actuate the type 546:
With the configurator, you have a choice of new electric actuators, the EA11 for standard applications and the EA21 with modular design and accessories, for practically and type of operation.

We supply what you put together.

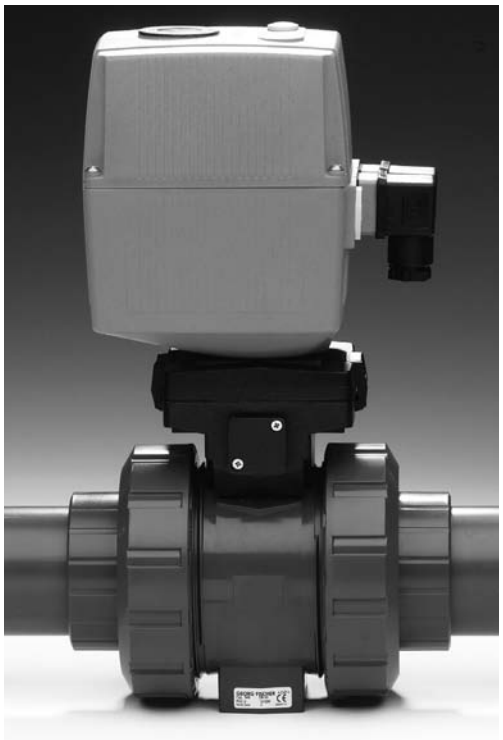

Electric Actuator EA11
T01 EA11 24 V
T02 EA11 100–230 V

Accessories EA11
U01 No accessories
U02 2 limit switches Ag, Ni
U03 Heating element
U04 Fail-safe return
U05 2 limit switches Ag, Ni normally open

Electric Actuator EA21/31
T03 EA21/31 24 V
T04 EA21/31 100–230 V

Accessories EA21
W01 No accessories
W02 Heating element
W03 Cycle time module
W04 Cycle time monitoring
W05 Cycles monitoring
W06 Motor current monitoring
W07 2 limit switches Ag, Ni
W08 2 limit switches Gold
W09 2 limit switches NPN
W10 2 limit switches PNP
W11 Positioner
W12 Electric position indicator
W14 Fail-safe return unit
W15 Switch intermediate position
W27 2 limit switches Ag, Ni normally open with connector
W31 Positioner PE25 with galv. separation

T	U	T	W	W	W	W	W	W

Ball valves pneumatic

DN10/15 - 50

SYGEF® standard
Ball valve type 232
Function FC (Fail safe to close)
With manual override
With fusion Sockets metric

Model:

- Built on with pneumatic actuator PA11/21
- For easy installation and removal
- Integrated stainless steel mounting inserts
- Control time 90°<) 1-2 s

Option:

- Individual configuration of the valve (see form)

d [mm]	DN [mm]	PN	kv-value (Δp=1 bar) [l/min]	FPM Code	kg
16	10	10	70	**199 232 012**	1.500
20	15	10	185	**199 232 013**	1.500
25	20	10	350	**199 232 014**	1.600
32	25	10	700	**199 232 015**	1.700
40	32	10	1000	**199 232 016**	2.800
50	40	10	1600	**199 232 017**	3.100
63	50	10	3100	**199 232 018**	4.000

d [mm]	D [mm]	H [mm]	H1 [mm]	H2 [mm]	H3 [mm]	H4 [mm]	H5 [mm]	L [mm]	L1 [mm]	L2 [mm]	L4 [mm]	L5 [mm]	L6 [mm]	L7 [mm]	z [mm]
16	50	230	27	62	168	40	97	92	194	56	25	261	76	48	64
20	50	230	27	62	168	40	97	95	194	56	25	261	76	48	64
25	58	239	30	71	168	40	97	110	194	65	25	261	76	48	72
32	68	239	36	71	168	40	97	123	194	71	25	261	76	48	79
40	84	271	44	84	187	51	115	146	224	85	45	305	95	59	94
50	97	271	51	84	187	51	115	157	224	89	45	305	95	59	95
63	124	293	64	106	187	51	115	183	224	101	45	305	95	59	107

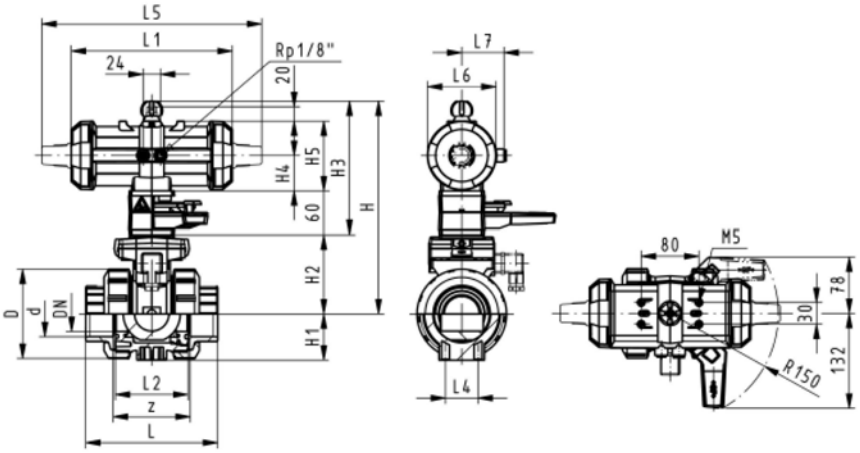

DN10/15 - 50

SYGEF® standard
Ball valve type 232
Function FO (Fail safe to open)
With manual override
With fusion sockets metric

Model:

- Built on with pneumatic actuator PA11/21
- For easy installation and removal
- Integrated stainless steel mounting inserts
- Control time 90°<) 1-2 s

Option:

- Individual configuration of the valve (see form)

d [mm]	DN [mm]	PN	kv-value (Δp=1 bar) [l/min]	FPM Code	kg
16	10	10	70	**199 232 052**	1.500
20	15	10	185	**199 232 053**	1.500
25	20	10	350	**199 232 054**	1.600
32	25	10	700	**199 232 055**	1.700
40	32	10	1000	**199 232 056**	2.800
50	40	10	1600	**199 232 057**	3.100
63	50	10	3100	**199 232 058**	4.000

d [mm]	D [mm]	H [mm]	H1 [mm]	H2 [mm]	H3 [mm]	H4 [mm]	H5 [mm]	L [mm]	L1 [mm]	L2 [mm]	L4 [mm]	L5 [mm]	L6 [mm]	L7 [mm]	z [mm]
16	50	230	27	62	168	40	97	92	194	56	25	261	76	48	64
20	50	230	27	62	168	40	97	95	194	56	25	261	76	48	64
25	58	239	30	71	168	40	97	110	194	65	25	261	76	48	72
32	68	239	36	71	168	40	97	123	194	71	25	261	76	48	79
40	84	271	44	84	187	51	115	146	224	85	45	305	95	59	94
50	97	271	51	84	187	51	115	157	224	89	45	305	95	59	95
63	124	293	64	106	187	51	115	183	224	101	45	305	95	59	107

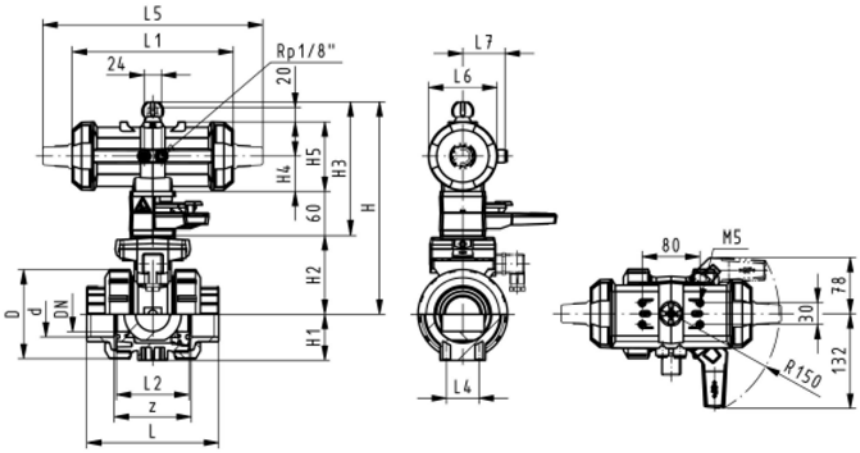

DN10/15 - 50

SYGEF® standard
Ball valve type 232
Function DA (Double acting)
With manual override
With fusion sockets metric

Model:

- Built on with pneumatic actuator PA11/21
- For easy installation and removal
- Integrated stainless steel mounting inserts
- Control time 90°<) 1-2 s

Option:

- Individual configuration of the valve (see form)

d [mm]	DN [mm]	PN	kv-value (Δp=1 bar) [l/min]	FPM Code	kg
16	10	10	70	**199 232 092**	1.500
20	15	10	185	**199 232 093**	1.500
25	20	10	350	**199 232 094**	1.600
32	25	10	700	**199 232 095**	1.700
40	32	10	1000	**199 232 096**	2.800
50	40	10	1600	**199 232 097**	3.100
63	50	10	3100	**199 232 098**	4.000

d [mm]	D [mm]	H [mm]	H1 [mm]	H2 [mm]	H3 [mm]	H4 [mm]	H5 [mm]	L [mm]	L1 [mm]	L2 [mm]	L4 [mm]	L5 [mm]	L6 [mm]	L7 [mm]	z [mm]
16	50	230	27	62	168	40	97	92	194	56	25	261	76	48	64
20	50	230	27	62	168	40	97	95	194	56	25	261	76	48	64
25	58	239	30	71	168	40	97	110	194	65	25	261	76	48	72
32	68	239	36	71	168	40	97	123	194	71	25	261	76	48	79
40	84	271	44	84	187	51	115	146	224	85	45	305	95	59	94
50	97	271	51	84	187	51	115	157	224	89	45	305	95	59	95
63	124	293	64	106	187	51	115	183	224	101	45	305	95	59	107

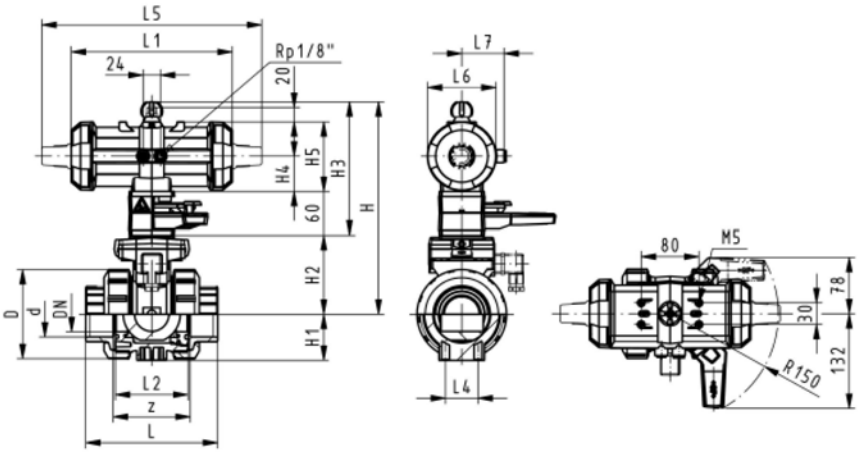

DN10/15 - 50

SYGEF® standard
Ball valve type 232
Function FC (Fail safe to close)
With manual override
With fusion spigots metric

Model:

- Built on with pneumatic actuator PA11/21
- For easy installation and removal
- Integrated stainless steel mounting inserts
- Control time 90°<) 1-2 s

Option:

- Individual configuration of the valve (see form)

d [mm]	DN [mm]	PN	kv-value (Δp=1 bar) [l/min]	FPM Code	kg
16	10	10	70	**199 232 032**	1.500
20	15	10	185	**199 232 033**	1.500
25	20	10	350	**199 232 034**	1.600
32	25	10	700	**199 232 035**	1.700
40	32	10	1000	**199 232 036**	2.800
50	40	10	1600	**199 232 037**	3.100
63	50	10	3100	**199 232 038**	4.000

d [mm]	D [mm]	H [mm]	H1 [mm]	H2 [mm]	H3 [mm]	H4 [mm]	H5 [mm]	L [mm]	L1 [mm]	L2 [mm]	L3 [mm]	L4 [mm]	L5 [mm]	L6 [mm]	L7 [mm]
16	50	230	27	62	168	40	97	92	194	56	130	25	261	76	48
20	50	230	27	62	168	40	97	95	194	56	130	25	261	76	48
25	58	239	30	71	168	40	97	110	194	65	150	25	261	76	48
32	68	239	36	71	168	40	97	123	194	71	160	25	261	76	48
40	84	271	44	84	187	51	115	146	224	85	180	45	305	95	59
50	97	271	51	84	187	51	115	157	224	89	200	45	305	95	59
63	124	293	64	106	187	51	115	183	224	101	230	45	305	95	59

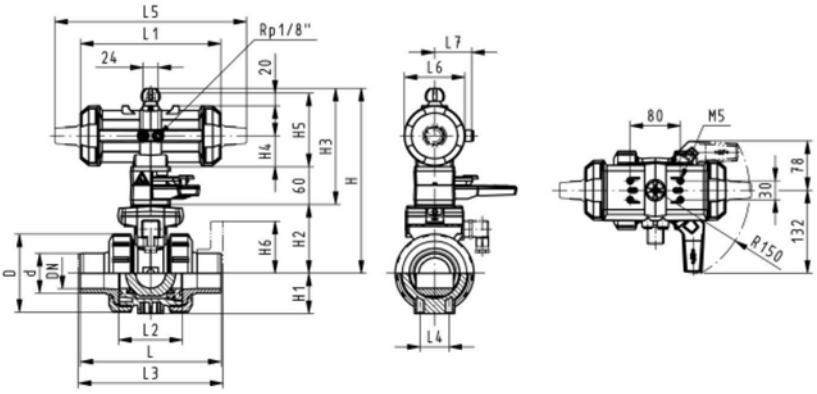

DN10/15 - 50

SYGEF® standard
Ball valve type 232
Function FO (Fail safe to open)
With manual override
With fusion spigots metric

Model:

- Built on with pneumatic actuator PA11/21
- For easy installation and removal
- Integrated stainless steel mounting inserts
- Control time 90°<) 1-2 s

Option:

- Individual configuration of the valve (see form)

d [mm]	DN [mm]	PN	kv-value (Δp=1 bar) [l/min]	FPM Code	kg
16	10	10	70	**199 232 072**	1.500
20	15	10	185	**199 232 073**	1.500
25	20	10	350	**199 232 074**	1.600
32	25	10	700	**199 232 075**	1.700
40	32	10	1000	**199 232 076**	2.800
50	40	10	1600	**199 232 077**	3.100
63	50	10	3100	**199 232 078**	4.000

d [mm]	D [mm]	H [mm]	H1 [mm]	H2 [mm]	H3 [mm]	H4 [mm]	H5 [mm]	L [mm]	L1 [mm]	L2 [mm]	L3 [mm]	L4 [mm]	L5 [mm]	L6 [mm]	L7 [mm]
16	50	230	27	62	168	40	97	92	194	56	130	25	261	76	48
20	50	230	27	62	168	40	97	95	194	56	130	25	261	76	48
25	58	239	30	71	168	40	97	110	194	65	150	25	261	76	48
32	68	239	36	71	168	40	97	123	194	71	160	25	261	76	48
40	84	271	44	84	187	51	115	146	224	85	180	45	305	95	59
50	97	271	51	84	187	51	115	157	224	89	200	45	305	95	59
63	124	293	64	106	187	51	115	183	224	101	230	45	305	95	59

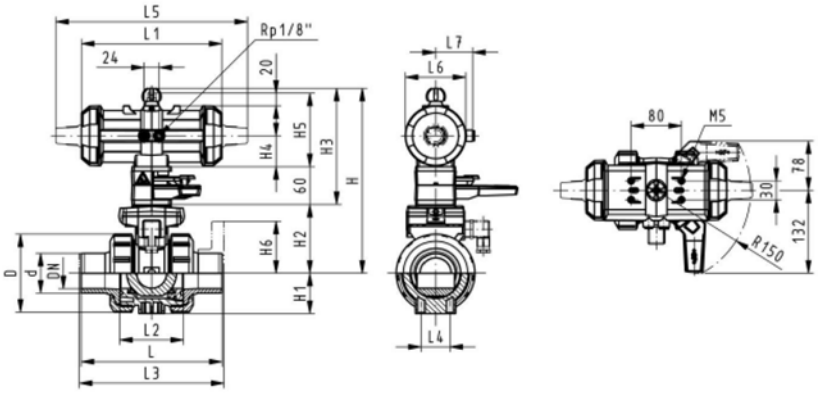

DN10/15 - 50

SYGEF® standard
Ball valve type 232
Function DA (Double acting)
With manual override
With fusion spigots metric

Model:

- Built on with pneumatic actuator PA11/21
- For easy installation and removal
- Integrated stainless steel mounting inserts
- Control time 90°<) 1-2 s

Option:

- Individual configuration of the valve (see form)

d [mm]	DN [mm]	PN	kv-value (Δp=1 bar) [l/min]	FPM Code	kg
16	10	10	70	**199 232 112**	1.500
20	15	10	185	**199 232 113**	1.500
25	20	10	350	**199 232 114**	1.600
32	25	10	700	**199 232 115**	1.700
40	32	10	1000	**199 232 116**	2.800
50	40	10	1600	**199 232 117**	3.100
63	50	10	3100	**199 232 118**	4.000

d [mm]	D [mm]	H [mm]	H1 [mm]	H2 [mm]	H3 [mm]	H4 [mm]	H5 [mm]	L [mm]	L1 [mm]	L2 [mm]	L3 [mm]	L4 [mm]	L5 [mm]	L6 [mm]	L7 [mm]
16	50	230	27	62	168	40	97	92	194	56	130	25	261	76	48
20	50	230	27	62	168	40	97	95	194	56	130	25	261	76	48
25	58	239	30	71	168	40	97	110	194	65	150	25	261	76	48
32	68	239	36	71	168	40	97	123	194	71	160	25	261	76	48
40	84	271	44	84	187	51	115	146	224	85	180	45	305	95	59
50	97	271	51	84	187	51	115	157	224	89	200	45	305	95	59
63	124	293	64	106	187	51	115	183	224	101	230	45	305	95	59

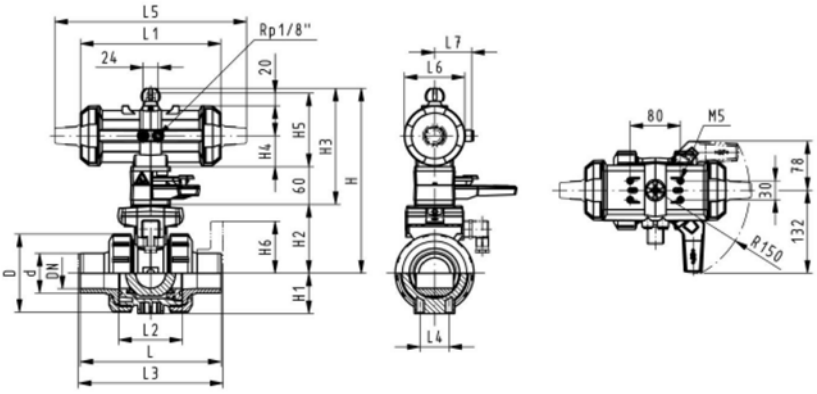

DN10/15 - 50

SYGEF® standard
Ball valve type 232
Function FC (Fail safe to close)
With manual override
With butt fusion spigots metric

Model:

- Built on with pneumatic actuator PA11/21
- For easy installation and removal
- Integrated stainless steel mounting inserts
- Control time 90°<) 1-2 s

Option:

- Individual configuration of the valve (see form)

d [mm]	DN [mm]	PN	kv-value (Δp=1 bar) [l/min]	FPM Code
20	15	10	185	**199 232 713**
25	20	10	350	**199 232 714**
32	25	10	700	**199 232 715**
40	32	10	1000	**199 232 716**
50	40	10	1600	**199 232 717**
63	50	10	3100	**199 232 718**

d [mm]	D [mm]	H [mm]	H1 [mm]	H2 [mm]	H3 [mm]	H4 [mm]	H5 [mm]	L [mm]	L1 [mm]	L2 [mm]	L4 [mm]	L5 [mm]	L6 [mm]	L7 [mm]
20	50	230	27	62	168	40	97	130	194	56	25	261	76	48
25	58	239	30	71	168	40	97	130	194	65	25	261	76	48
32	68	239	36	71	168	40	97	130	194	71	25	261	76	48
40	84	271	44	84	187	51	115	130	224	85	45	305	95	59
50	97	271	51	84	187	51	115	130	224	89	45	305	95	59
63	124	293	64	106	187	51	115	130	224	101	45	305	95	59

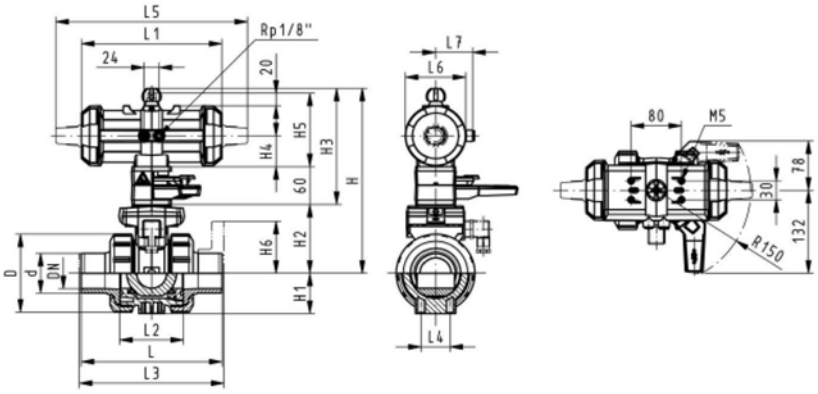

DN10/15 - 50

SYGEF® standard
Ball valve type 232
Function FO (Fail safe to open)
With manual override
With butt fusion spigots metric

Model:

- Built on with pneumatic actuator PA11/21
- For easy installation and removal
- Integrated stainless steel mounting inserts
- Control time 90°<) 1-2 s

Option:

- Individual configuration of the valve (see form)

d [mm]	DN [mm]	PN	kv-value (Δp=1 bar) [l/min]	FPM Code
20	15	10	185	**199 232 753**
25	20	10	350	**199 232 754**
32	25	10	700	**199 232 755**
40	32	10	1000	**199 232 756**
50	40	10	1600	**199 232 757**
63	50	10	3100	**199 232 758**

d [mm]	D [mm]	H [mm]	H1 [mm]	H2 [mm]	H3 [mm]	H4 [mm]	H5 [mm]	L [mm]	L1 [mm]	L2 [mm]	L4 [mm]	L5 [mm]	L6 [mm]	L7 [mm]
20	50	230	27	62	168	40	97	130	194	56	25	261	76	48
25	58	239	30	71	168	40	97	130	194	65	25	261	76	48
32	68	239	36	71	168	40	97	130	194	71	25	261	76	48
40	84	271	44	84	187	51	115	130	224	85	45	305	95	59
50	97	271	51	84	187	51	115	130	224	89	45	305	95	59
63	124	293	64	106	187	51	115	130	224	101	45	305	95	59

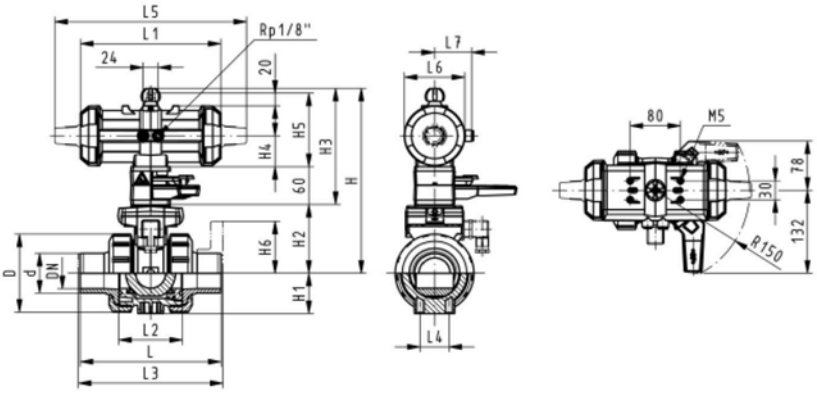

DN10/15 - 50

SYGEF® standard
Ball valve type 232
Function DA (Double acting)
With manual override
With butt fusion spigots metric

Model:

- Built on with pneumatic actuator PA11/21
- For easy installation and removal
- Integrated stainless steel mounting inserts
- Control time 90°<) 1-2 s

Option:

- Individual configuration of the valve (see form)

d [mm]	DN [mm]	PN	kv-value (Δp=1 bar) [l/min]	FPM Code
20	15	10	185	**199 232 793**
25	20	10	350	**199 232 794**
32	25	10	700	**199 232 795**
40	32	10	1000	**199 232 796**
50	40	10	1600	**199 232 797**
63	50	10	3100	**199 232 798**

d [mm]	D [mm]	H [mm]	H1 [mm]	H2 [mm]	H3 [mm]	H4 [mm]	H5 [mm]	L [mm]	L1 [mm]	L2 [mm]	L4 [mm]	L5 [mm]	L6 [mm]	L7 [mm]
20	50	230	27	62	168	40	97	130	194	56	25	261	76	48
25	58	239	30	71	168	40	97	130	194	65	25	261	76	48
32	68	239	36	71	168	40	97	130	194	71	25	261	76	48
40	84	271	44	84	187	51	115	130	224	85	45	305	95	59
50	97	271	51	84	187	51	115	130	224	89	45	305	95	59
63	124	293	64	106	187	51	115	130	224	101	45	305	95	59

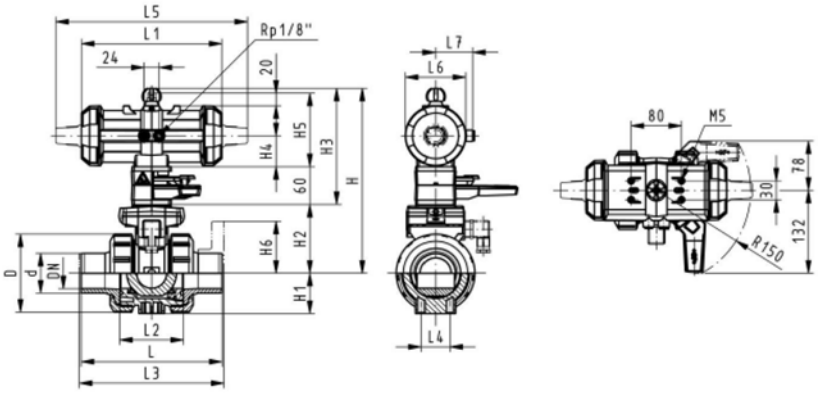

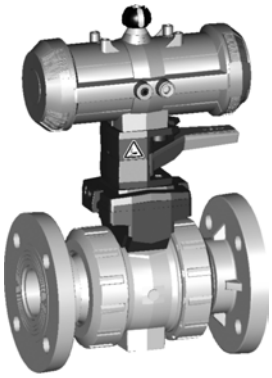

DN10/15 - 50

SYGEF® standard
Ball valve type 232
Function FC (Fail safe to close)
With manual override
With fixed flanges PVDF serrated metric

Model:

- Built on with pneumatic actuator PA11/21
- For easy installation and removal
- Integrated stainless steel mounting inserts
- Control time 90°<) 1-2 s
- Connecting dimensions: ISO 7005 / EN 1092 / DIN 2501 PN10 / BS4504

Option:

- Individual configuration of the valve (see form)

d [mm]	DN [mm]	Inch	PN	kv-value (Δp=1 bar) [l/min]	FPM Code	kg
20	15	½	10	185	**199 232 003**	1.700
25	20	¾	10	350	**199 232 004**	1.900
32	25	1	10	700	**199 232 005**	2.100
40	32	1 ¼	10	1000	**199 232 006**	3.400
50	40	1 ½	10	1600	**199 232 007**	3.900
63	50	2	10	3100	**199 232 008**	5.000

d [mm]	D [mm]	H [mm]	H1 [mm]	H2 [mm]	H3 [mm]	H4 [mm]	H5 [mm]	H6 [mm]	L [mm]	L1 [mm]	L2 [mm]	L3 [mm]	L4 [mm]	L5 [mm]	L6 [mm]
20	50	230	27	62	168	40	97	48	124	194	56	130	25	261	76
25	58	239	30	71	168	40	97	53	144	194	65	150	25	261	76
32	68	239	36	71	168	40	97	58	154	194	71	160	25	261	76
40	84	271	44	84	187	51	115	70	174	224	85	180	45	305	95
50	97	271	51	84	187	51	115	75	194	224	89	200	45	305	95
63	124	293	64	106	187	51	115	83	224	224	101	230	45	305	95

d [mm]	L7 [mm]
20	48
25	48
32	48
40	59
50	59
63	59

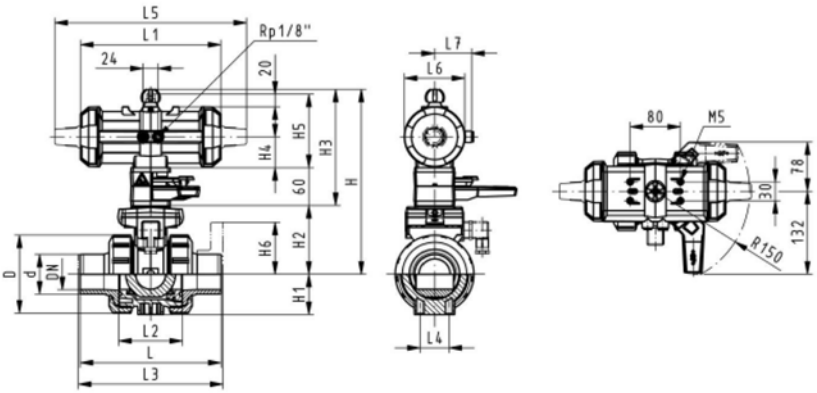

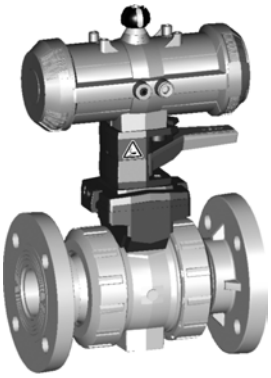

DN10/15 - 50

SYGEF® standard
Ball valve type 232
Function FO (Fail safe to open)
With manual override
With fixed flanges PVDF serrated metric

Model:

- Built on with pneumatic actuator PA11/21
- For easy installation and removal
- Integrated stainless steel mounting inserts
- Control time 90°<) 1-2 s
- Overall length EN 558-1
- Connecting dimensions: ISO 7005 / EN 1092 / DIN 2501 PN10 / BS4504

Option:

- Individual configuration of the valve (see form)

d [mm]	DN [mm]	Inch	PN	kv-value (Δp=1 bar) [l/min]	FPM Code	kg
20	15	½	10	185	**199 232 023**	1.700
25	20	¾	10	350	**199 232 024**	1.900
32	25	1	10	700	**199 232 025**	2.100
40	32	1 ¼	10	1000	**199 232 026**	3.400
50	40	1 ½	10	1600	**199 232 027**	3.900
63	50	2	10	3100	**199 232 028**	5.000

d [mm]	D [mm]	H [mm]	H1 [mm]	H2 [mm]	H3 [mm]	H4 [mm]	H5 [mm]	H6 [mm]	L [mm]	L1 [mm]	L2 [mm]	L3 [mm]	L4 [mm]	L5 [mm]	L6 [mm]
20	50	230	27	62	168	40	97	48	124	194	56	130	25	261	76
25	58	239	30	71	168	40	97	53	144	194	65	150	25	261	76
32	68	239	36	71	168	40	97	58	154	194	71	160	25	261	76
40	84	271	44	84	187	51	115	70	174	224	85	180	45	305	95
50	97	271	51	84	187	51	115	75	194	224	89	200	45	305	95
63	124	293	64	106	187	51	115	83	224	224	101	230	45	305	95

d [mm]	L7 [mm]
20	48
25	48
32	48
40	59
50	59
63	59

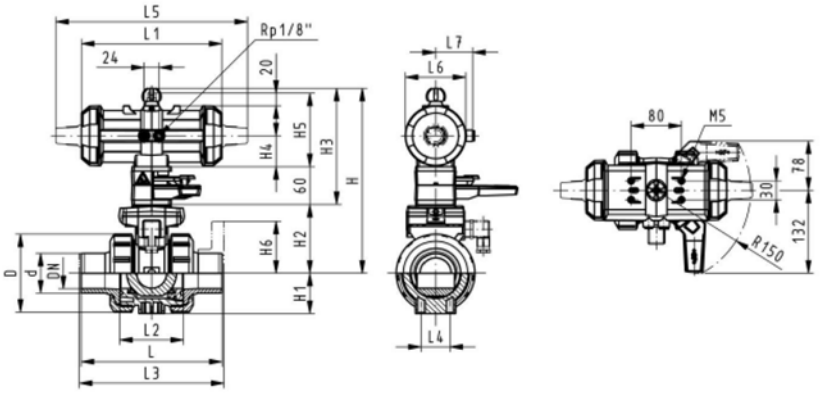

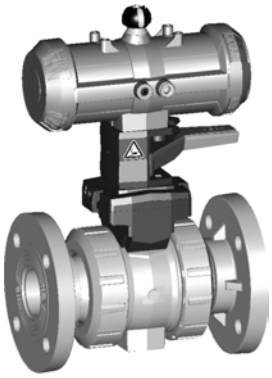

DN10/15 - 50

SYGEF® standard
Ball valve type 232
Function DA (Double acting)
With manual override
With fixed flanges PVDF serrated metric

Model:

- Built on with pneumatic actuator PA11/21
- For easy installation and removal
- Integrated stainless steel mounting inserts
- Control time 90°<) 1-2 s
- Overall length EN 558-1
- Connecting dimensions: ISO 7005 / EN 1092 / DIN 2501 PN10 / BS4504

Option:

- Individual configuration of the valve (see form)

d [mm]	DN [mm]	Inch	PN	kv-value (Δp=1 bar) [l/min]	FPM Code	kg
20	15	½	10	185	**199 232 043**	1.700
25	20	¾	10	350	**199 232 044**	1.900
32	25	1	10	700	**199 232 045**	2.100
40	32	1 ¼	10	1000	**199 232 046**	3.400
50	40	1 ½	10	1600	**199 232 047**	3.900
63	50	2	10	3100	**199 232 048**	5.000

d [mm]	D [mm]	H [mm]	H1 [mm]	H2 [mm]	H3 [mm]	H4 [mm]	H5 [mm]	H6 [mm]	L [mm]	L1 [mm]	L2 [mm]	L3 [mm]	L4 [mm]	L5 [mm]	L6 [mm]
20	50	230	27	62	168	40	97	48	124	194	56	130	25	261	76
25	58	239	30	71	168	40	97	53	144	194	65	150	25	261	76
32	68	239	36	71	168	40	97	58	154	194	71	160	25	261	76
40	84	271	44	84	187	51	115	70	174	224	85	180	45	305	95
50	97	271	51	84	187	51	115	75	194	224	89	200	45	305	95
63	124	293	64	106	187	51	115	83	224	224	101	230	45	305	95

d [mm]	L7 [mm]
20	48
25	48
32	48
40	59
50	59
63	59

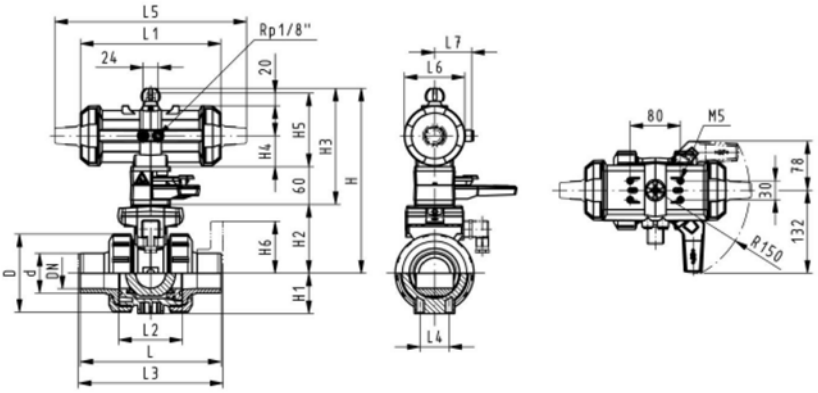

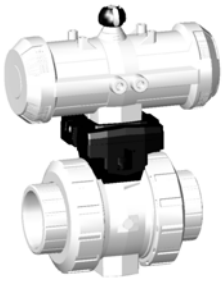

DN10/15 - 50

SYGEF® standard
Ball valve type 232
Function FC (Fail safe to close)
Without manual override
With fusion sockets metric

Model:

- Built on with pneumatic actuator PA11/21
- For easy installation and removal
- Integrated stainless steel mounting inserts
- Control time 90°<) 1-2 s

Option:

- Individual configuration of the valve (see form)

d [mm]	DN [mm]	PN	kv-value (Δp=1 bar) [l/min]	FPM Code	kg
16	10	10	70	**199 232 132**	1.200
20	15	10	185	**199 232 133**	1.200
25	20	10	350	**199 232 134**	1.300
32	25	10	700	**199 232 135**	1.400
40	32	10	1000	**199 232 136**	2.500
50	40	10	1600	**199 232 137**	2.800
63	50	10	3100	**199 232 138**	3.700

d [mm]	D [mm]	H [mm]	H1 [mm]	H2 [mm]	H4 [mm]	H5 [mm]	L [mm]	L1 [mm]	L2 [mm]	L4 [mm]	L5 [mm]	L6 [mm]	L7 [mm]	z [mm]
16	50	167	27	62	40	97	92	194	56	25	261	76	48	64
20	50	167	27	62	40	97	95	194	56	25	261	76	48	64
25	58	176	30	71	40	97	110	194	65	25	261	76	48	72
32	68	176	36	71	40	97	123	194	71	25	261	76	48	79
40	84	210	44	84	51	115	146	224	85	45	305	95	59	94
50	97	210	51	84	51	115	157	224	89	45	305	95	59	95
63	124	232	64	106	51	115	183	224	101	45	305	95	59	107

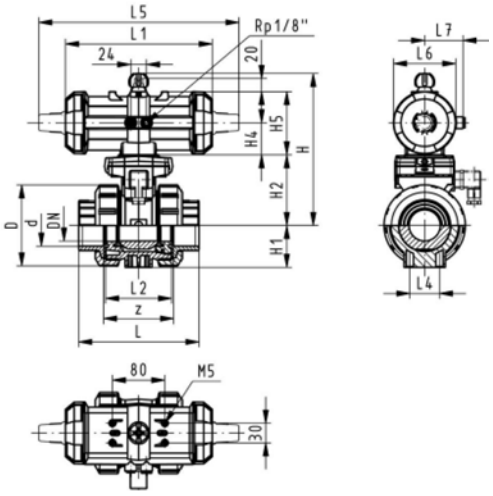

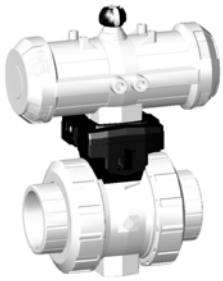

DN10/15 - 50

SYGEF® standard
Ball valve type 232
Function FO (Fail safe to open)
Without manual override
With fusion sockets metric

Model:

- Built on with pneumatic actuator PA11/21
- For easy installation and removal
- Integrated stainless steel mounting inserts
- Control time 90°<) 1-2 s

Option:

- Individual configuration of the valve (see form)

d [mm]	DN [mm]	PN	kv-value (Δp=1 bar) [l/min]	FPM Code	kg
16	10	10	70	**199 232 172**	1.200
20	15	10	185	**199 232 173**	1.200
25	20	10	350	**199 232 174**	1.300
32	25	10	700	**199 232 175**	1.400
40	32	10	1000	**199 232 176**	2.500
50	40	10	1600	**199 232 177**	2.800
63	50	10	3100	**199 232 178**	3.700

d [mm]	D [mm]	H [mm]	H1 [mm]	H2 [mm]	H4 [mm]	H5 [mm]	L [mm]	L1 [mm]	L2 [mm]	L4 [mm]	L5 [mm]	L6 [mm]	L7 [mm]	z [mm]
16	50	167	27	62	40	97	92	194	56	25	261	76	48	64
20	50	167	27	62	40	97	95	194	56	25	261	76	48	64
25	58	176	30	71	40	97	110	194	65	25	261	76	48	72
32	68	176	36	71	40	97	123	194	71	25	261	76	48	79
40	84	210	44	84	51	115	146	224	85	45	305	95	59	94
50	97	210	51	84	51	115	157	224	89	45	305	95	59	95
63	124	232	64	106	51	115	183	224	101	45	305	95	59	107

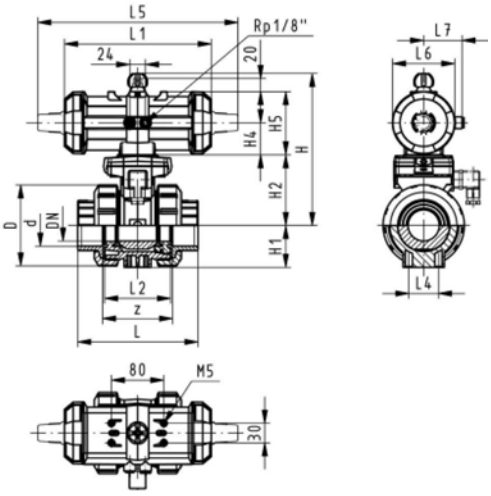

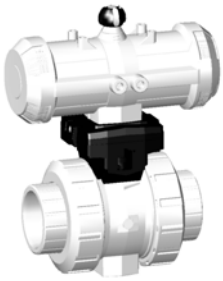

DN10/15 - 50

SYGEF® standard
Ball valve type 232
Function DA (Double acting)
Without manual override
With fusion sockets metric

Model:

- Built on with pneumatic actuator PA11/21
- For easy installation and removal
- Integrated stainless steel mounting inserts
- Control time 90°<) 1-2 s

Option:

- Individual configuration of the valve (see form)

d [mm]	DN [mm]	PN	kv-value (Δp=1 bar) [l/min]	FPM Code	kg
16	10	10	70	**199 232 212**	1.200
20	15	10	185	**199 232 213**	1.200
25	20	10	350	**199 232 214**	1.300
32	25	10	700	**199 232 215**	1.400
40	32	10	1000	**199 232 216**	2.500
50	40	10	1600	**199 232 217**	2.800
63	50	10	3100	**199 232 218**	3.700

d [mm]	D [mm]	H [mm]	H1 [mm]	H2 [mm]	H4 [mm]	H5 [mm]	L [mm]	L1 [mm]	L2 [mm]	L4 [mm]	L5 [mm]	L6 [mm]	L7 [mm]	z [mm]
16	50	167	27	62	40	97	92	194	56	25	261	76	48	64
20	50	167	27	62	40	97	95	194	56	25	261	76	48	64
25	58	176	30	71	40	97	110	194	65	25	261	76	48	72
32	68	176	36	71	40	97	123	194	71	25	261	76	48	79
40	84	210	44	84	51	115	146	224	85	45	305	95	59	94
50	97	210	51	84	51	115	157	224	89	45	305	95	59	95
63	124	232	64	106	51	115	183	224	101	45	305	95	59	107

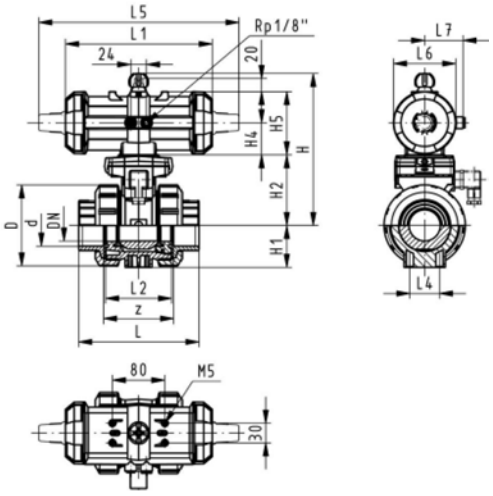

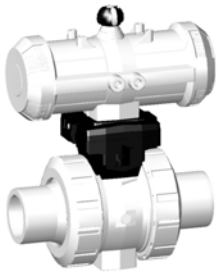

DN10/15 - 50

SYGEF® standard
Ball valve type 232
Function FC (Fail safe to close)
Without manual override
With fusion spigots metric

Model:

- Built on with pneumatic actuator PA11/21
- For easy installation and removal
- Integrated stainless steel mounting inserts
- Control time 90°<) 1-2 s

Option:

- Individual configuration of the valve (see form)

d [mm]	DN [mm]	PN	kv-value (Δp=1 bar) [l/min]	FPM Code	kg
16	10	10	70	**199 232 152**	1.200
20	15	10	185	**199 232 153**	1.200
25	20	10	350	**199 232 154**	1.300
32	25	10	700	**199 232 155**	1.400
40	32	10	1000	**199 232 156**	2.500
50	40	10	1600	**199 232 157**	2.800
63	50	10	3100	**199 232 158**	3.700

d [mm]	D [mm]	H [mm]	H1 [mm]	H2 [mm]	H4 [mm]	H5 [mm]	L [mm]	L1 [mm]	L2 [mm]	L3 [mm]	L4 [mm]	L5 [mm]	L6 [mm]	L7 [mm]
16	50	167	27	62	40	97	114	194	56	130	25	261	76	48
20	50	167	27	62	40	97	124	194	56	130	25	261	76	48
25	58	176	30	71	40	97	144	194	65	150	25	261	76	48
32	68	176	36	71	40	97	154	194	71	160	25	261	76	48
40	84	210	44	84	51	115	174	224	85	180	45	305	95	59
50	97	210	51	84	51	115	194	224	89	200	45	305	95	59
63	124	232	64	106	51	115	224	224	101	230	45	305	95	59

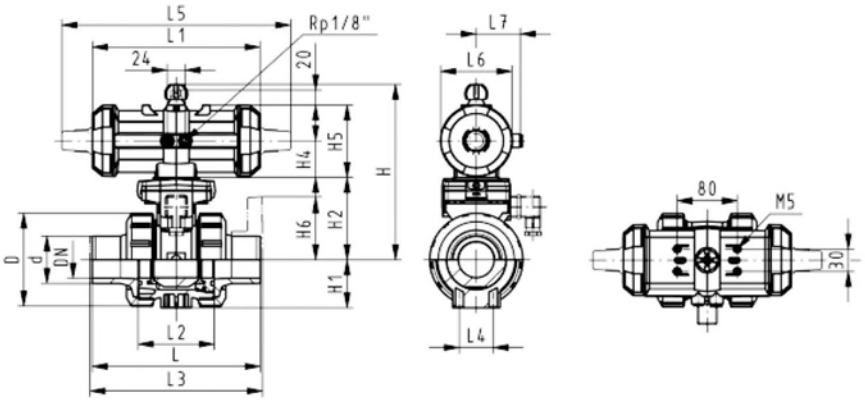

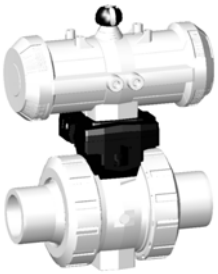

DN10/15 - 50

SYGEF® standard
Ball valve type 232
Function FO (Fail safe to open)
Without manual override
With fusion spigots metric

Model:

- Built on with pneumatic actuator PA11/21
- For easy installation and removal
- Integrated stainless steel mounting inserts
- Control time 90°<) 1-2 s

Option:

- Individual configuration of the valve (see form)

d [mm]	DN [mm]	PN	kv-value (Δp=1 bar) [l/min]	FPM Code	kg
16	10	10	70	**199 232 192**	1.200
20	15	10	185	**199 232 193**	1.200
25	20	10	350	**199 232 194**	1.300
32	25	10	700	**199 232 195**	1.400
40	32	10	1000	**199 232 196**	2.500
50	40	10	1600	**199 232 197**	2.800
63	50	10	3100	**199 232 198**	3.700

d [mm]	D [mm]	H [mm]	H1 [mm]	H2 [mm]	H4 [mm]	H5 [mm]	L [mm]	L1 [mm]	L2 [mm]	L3 [mm]	L4 [mm]	L5 [mm]	L6 [mm]	L7 [mm]
16	50	167	27	62	40	97	114	194	56	130	25	261	76	48
20	50	167	27	62	40	97	124	194	56	130	25	261	76	48
25	58	176	30	71	40	97	144	194	65	150	25	261	76	48
32	68	176	36	71	40	97	154	194	71	160	25	261	76	48
40	84	210	44	84	51	115	174	224	85	180	45	305	95	59
50	97	210	51	84	51	115	194	224	89	200	45	305	95	59
63	124	232	64	106	51	115	224	224	101	230	45	305	95	59

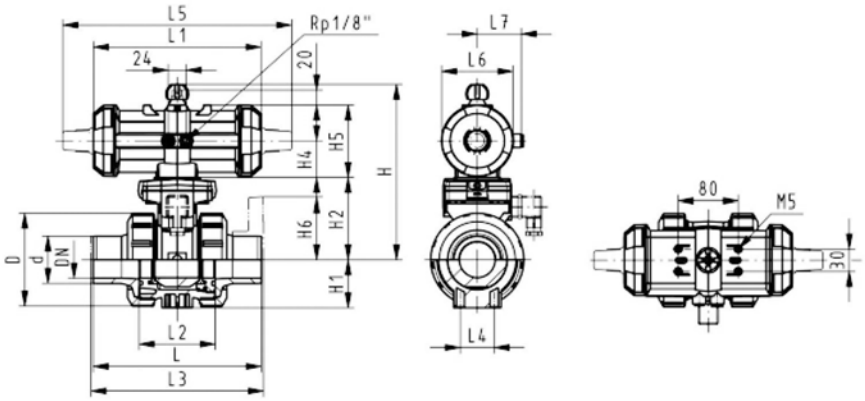

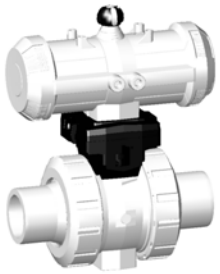

DN10/15 - 50

SYGEF® standard
Ball valve type 232
Function DA (Double acting)
Without manual override
With fusion spigots metric

Model:

- Built on with pneumatic actuator PA11/21
- For easy installation and removal
- Integrated stainless steel mounting inserts
- Control time 90°<) 1-2 s

Option:

- Individual configuration of the valve (see form)

d [mm]	DN [mm]	PN	kv-value (Δp=1 bar) [l/min]	FPM Code	kg
16	10	10	70	**199 232 232**	1.200
20	15	10	185	**199 232 233**	1.200
25	20	10	350	**199 232 234**	1.300
32	25	10	700	**199 232 235**	1.400
40	32	10	1000	**199 232 236**	2.500
50	40	10	1600	**199 232 237**	2.800
63	50	10	3100	**199 232 238**	3.700

d [mm]	D [mm]	H [mm]	H1 [mm]	H2 [mm]	H4 [mm]	H5 [mm]	L [mm]	L1 [mm]	L2 [mm]	L3 [mm]	L4 [mm]	L5 [mm]	L6 [mm]	L7 [mm]
16	50	167	27	62	40	97	114	194	56	130	25	261	76	48
20	50	167	27	62	40	97	124	194	56	130	25	261	76	48
25	58	176	30	71	40	97	144	194	65	150	25	261	76	48
32	68	176	36	71	40	97	154	194	71	160	25	261	76	48
40	84	210	44	84	51	115	174	224	85	180	45	305	95	59
50	97	210	51	84	51	115	194	224	89	200	45	305	95	59
63	124	232	64	106	51	115	224	224	101	230	45	305	95	59

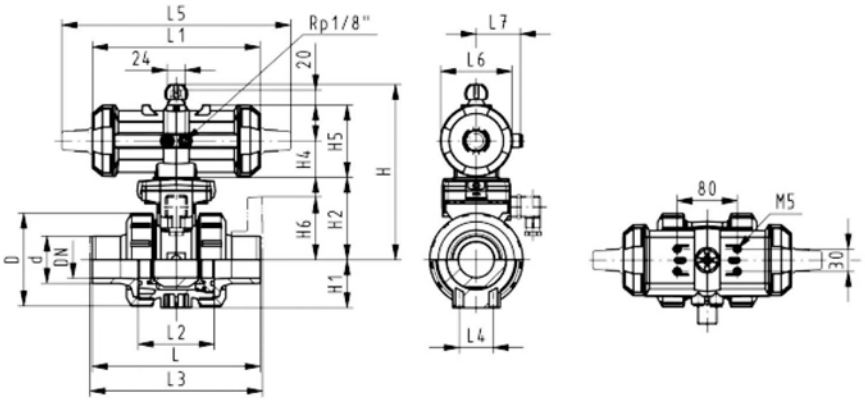

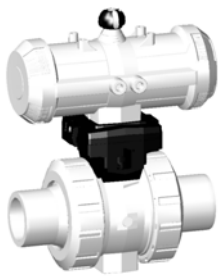

DN10/15 - 50

SYGEF® standard
Ball valve type 232
Function FC (Fail safe to close)
Without manual override
With butt fusion spigots metric

Model:

- Built on with pneumatic actuator PA11/21
- For easy installation and removal
- Integrated stainless steel mounting inserts
- Control time 90°<) 1-2 s

Option:

- Individual configuration of the valve (see form)

d [mm]	DN [mm]	PN	kv-value (Δp=1 bar) [l/min]	FPM Code
20	15	10	185	**199 232 833**
25	20	10	350	**199 232 834**
32	25	10	700	**199 232 835**
40	32	10	1000	**199 232 836**
50	40	10	1600	**199 232 837**
63	50	10	3100	**199 232 838**

d [mm]	D [mm]	H [mm]	H1 [mm]	H2 [mm]	H4 [mm]	H5 [mm]	L [mm]	L1 [mm]	L2 [mm]	L4 [mm]	L5 [mm]	L6 [mm]	L7 [mm]
20	50	167	27	62	40	97	130	194	56	25	261	76	48
25	58	176	30	71	40	97	130	194	65	25	261	76	48
32	68	176	36	71	40	97	130	194	71	25	261	76	48
40	84	210	44	84	51	115	130	224	85	45	305	95	59
50	97	210	51	84	51	115	130	224	89	45	305	95	59
63	124	232	64	106	51	115	130	224	101	45	305	95	59

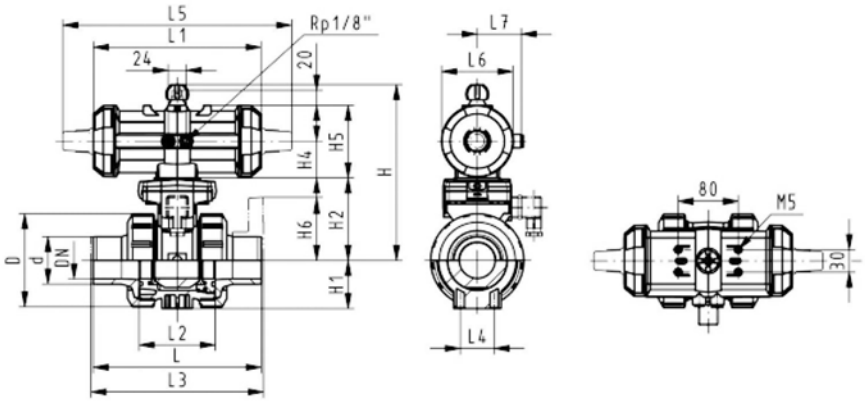

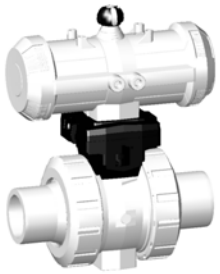

DN10/15 - 50

SYGEF® standard
Ball valve type 232
Function FO (Fail safe to open)
Without manual override
With butt fusion spigots metric

Model:

- Built on with pneumatic actuator PA11/21
- For easy installation and removal
- Integrated stainless steel mounting inserts
- Control time 90°<) 1-2 s

Option:

- Individual configuration of the valve (see form)

d [mm]	DN [mm]	PN	kv-value (Δp=1 bar) [l/min]	FPM Code
20	15	10	185	**199 232 873**
25	20	10	350	**199 232 874**
32	25	10	700	**199 232 875**
40	32	10	1000	**199 232 876**
50	40	10	1600	**199 232 877**
63	50	10	3100	**199 232 878**

d [mm]	D [mm]	H [mm]	H1 [mm]	H2 [mm]	H4 [mm]	H5 [mm]	L [mm]	L1 [mm]	L2 [mm]	L4 [mm]	L5 [mm]	L6 [mm]	L7 [mm]
20	50	167	27	62	40	97	130	194	56	25	261	76	48
25	58	176	30	71	40	97	130	194	65	25	261	76	48
32	68	176	36	71	40	97	130	194	71	25	261	76	48
40	84	210	44	84	51	115	130	224	85	45	305	95	59
50	97	210	51	84	51	115	130	224	89	45	305	95	59
63	124	232	64	106	51	115	130	224	101	45	305	95	59

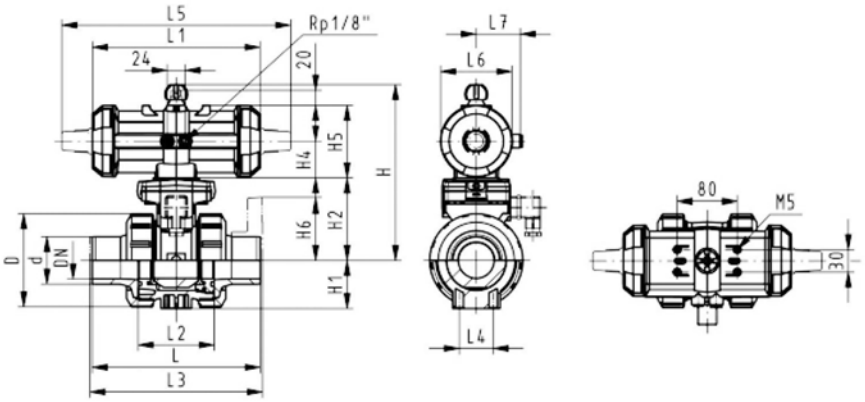

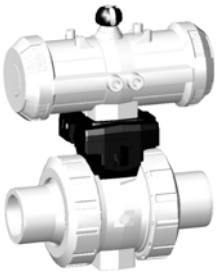

DN10/15 - 50

SYGEF® standard
Ball valve type 232
Function DA (Double acting)
Without manual override
With butt fusion spigots metric

Model:

- Built on with pneumatic actuator PA11/21
- For easy installation and removal
- Integrated stainless steel mounting inserts
- Control time 90°<) 1-2 s

Option:

- Individual configuration of the valve (see form)

d [mm]	DN [mm]	PN	kv-value (Δp=1 bar) [l/min]	FPM Code
20	15	10	185	**199 232 913**
25	20	10	350	**199 232 914**
32	25	10	700	**199 232 915**
40	32	10	1000	**199 232 916**
50	40	10	1600	**199 232 917**
63	50	10	3100	**199 232 918**

d [mm]	D [mm]	H [mm]	H1 [mm]	H2 [mm]	H4 [mm]	H5 [mm]	L [mm]	L1 [mm]	L2 [mm]	L4 [mm]	L5 [mm]	L6 [mm]	L7 [mm]
20	50	167	27	62	40	97	130	194	56	25	261	76	48
25	58	176	30	71	40	97	130	194	65	25	261	76	48
32	68	176	36	71	40	97	130	194	71	25	261	76	48
40	84	210	44	84	51	115	130	224	85	45	305	95	59
50	97	210	51	84	51	115	130	224	89	45	305	95	59
63	124	232	64	106	51	115	130	224	101	45	305	95	59

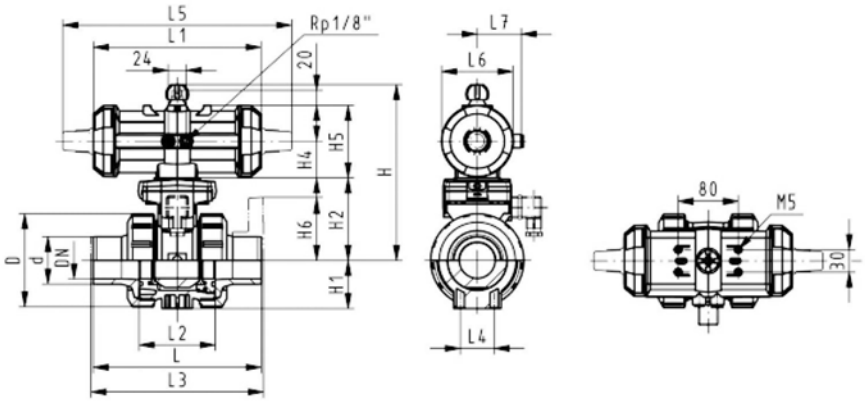

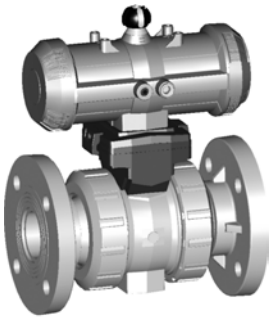

DN10/15 - 50

SYGEF® standard
Ball valve type 232
Function FC (Fail safe to close)
Without manual override
With fixed flanges PVDF serrated metric

Model:

- Built on with pneumatic actuator PA11/21
- For easy installation and removal
- Integrated stainless steel mounting inserts
- Control time 90°<) 1-2 s
- Overall length EN 558-1
- Connecting dimensions: ISO 7005 / EN 1092 / DIN 2501 PN10 / BS4504

Option:

- Individual configuration of the valve (see form)

d [mm]	DN [mm]	Inch	PN	kv-value (Δp=1 bar) [l/min]	FPM Code	kg
20	15	½	10	185	**199 232 063**	1.400
25	20	¾	10	350	**199 232 064**	1.600
32	25	1	10	700	**199 232 065**	1.800
40	32	1 ¼	10	1000	**199 232 066**	3.100
50	40	1 ½	10	1600	**199 232 067**	3.600
63	50	2	10	3100	**199 232 068**	4.700

d [mm]	D [mm]	H [mm]	H1 [mm]	H2 [mm]	H4 [mm]	H5 [mm]	H6 [mm]	L [mm]	L1 [mm]	L2 [mm]	L3 [mm]	L4 [mm]	L5 [mm]	L6 [mm]	L7 [mm]
20	50	167	27	62	40	97	48	124	194	56	130	25	261	76	48
25	58	176	30	71	40	97	53	144	194	65	150	25	261	76	48
32	68	176	36	71	40	97	58	154	194	71	160	25	261	76	48
40	84	210	44	84	51	115	70	174	224	85	180	45	305	95	59
50	97	210	51	84	51	115	75	194	224	89	200	45	305	95	59
63	124	232	64	106	51	115	83	224	224	101	230	45	305	95	59

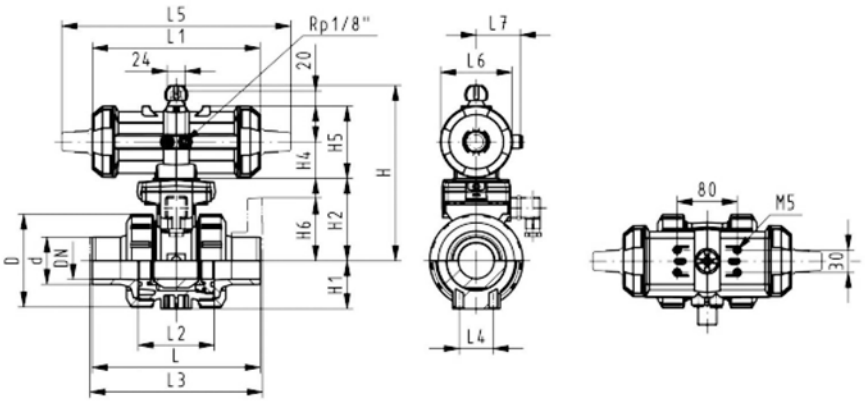

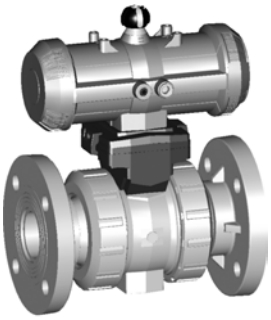

DN10/15 - 50

SYGEF® standard
Ball valve type 232
Function FO (Fail safe to open)
Without manual override
With fixed flanges PVDF serrated metric

Model:

- Built on with pneumatic actuator PA11/21
- For easy installation and removal
- Integrated stainless steel mounting inserts
- Control time 90°<) 1-2 s
- Overall length EN 558-1
- Connecting dimensions: ISO 7005 / EN 1092 / DIN 2501 PN10 / BS4504

Option:

- Individual configuration of the valve (see form)

d [mm]	DN [mm]	Inch	PN	kv-value (Δp=1 bar) [l/min]	FPM Code	kg
20	15	½	10	185	**199 232 083**	1.400
25	20	¾	10	350	**199 232 084**	1.600
32	25	1	10	700	**199 232 085**	1.800
40	32	1 ¼	10	1000	**199 232 086**	3.100
50	40	1 ½	10	1600	**199 232 087**	3.600
63	50	2	10	3100	**199 232 088**	4.700

d [mm]	D [mm]	H [mm]	H1 [mm]	H2 [mm]	H4 [mm]	H5 [mm]	H6 [mm]	L [mm]	L1 [mm]	L2 [mm]	L3 [mm]	L4 [mm]	L5 [mm]	L6 [mm]	L7 [mm]
20	50	167	27	62	40	97	48	124	194	56	130	25	261	76	48
25	58	176	30	71	40	97	53	144	194	65	150	25	261	76	48
32	68	176	36	71	40	97	58	154	194	71	160	25	261	76	48
40	84	210	44	84	51	115	70	174	224	85	180	45	305	95	59
50	97	210	51	84	51	115	75	194	224	89	200	45	305	95	59
63	124	232	64	106	51	115	83	224	224	101	230	45	305	95	59

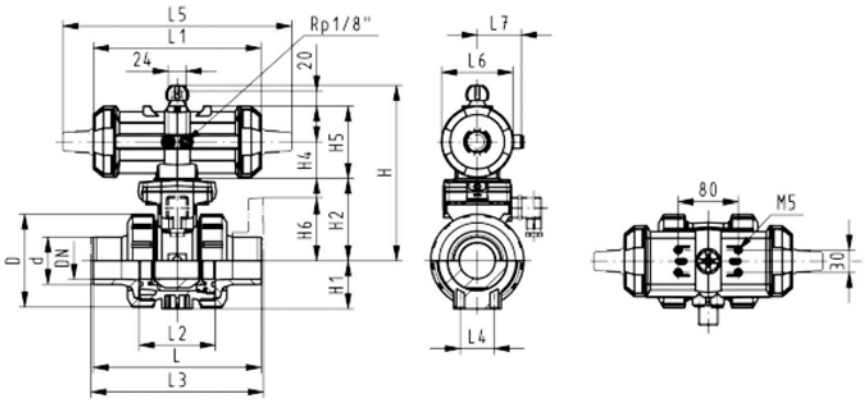

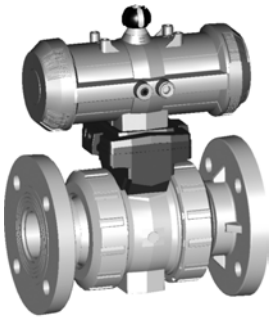

DN10/15 - 50

SYGEF® standard
Ball valve type 232
Function DA (Double acting)
Without manual override
With fixed flanges PVDF serrated metric

Model:

- Built on with pneumatic actuator PA11/21
- For easy installation and removal
- Integrated stainless steel mounting inserts
- Control time 90°<) 1-2 s
- Overall length EN 558-1
- Connecting dimensions: ISO 7005 / EN 1092 / DIN 2501 PN10 / BS4504

Option:

- Individual configuration of the valve (see form)

d [mm]	DN [mm]	Inch	PN	kv-value (Δp=1 bar) [l/min]	FPM Code	kg
20	15	½	10	185	**199 232 103**	1.400
25	20	¾	10	350	**199 232 104**	1.600
32	25	1	10	700	**199 232 105**	1.800
40	32	1 ¼	10	1000	**199 232 106**	3.100
50	40	1 ½	10	1600	**199 232 107**	3.600
63	50	2	10	3100	**199 232 108**	4.700

d [mm]	D [mm]	H [mm]	H1 [mm]	H2 [mm]	H4 [mm]	H5 [mm]	H6 [mm]	L [mm]	L1 [mm]	L2 [mm]	L3 [mm]	L4 [mm]	L5 [mm]	L6 [mm]	L7 [mm]
20	50	167	27	62	40	97	48	124	194	56	130	25	261	76	48
25	58	176	30	71	40	97	53	144	194	65	150	25	261	76	48
32	68	176	36	71	40	97	58	154	194	71	160	25	261	76	48
40	84	210	44	84	51	115	70	174	224	85	180	45	305	95	59
50	97	210	51	84	51	115	75	194	224	89	200	45	305	95	59
63	124	232	64	106	51	115	83	224	224	101	230	45	305	95	59

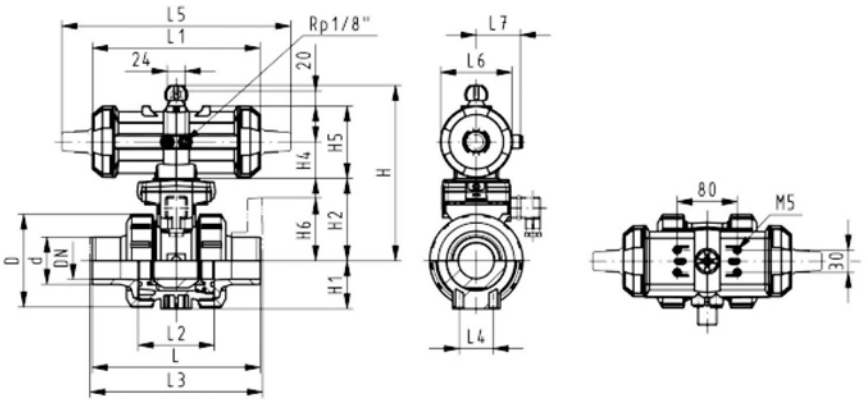

Copiable
Configurator +GF+ Ball Valve Type 546 PVDF

You will find a large selection of different versions in our range of products. New system elements also provide you with new opportunities for use. In order for us to supply exactly the ball valve you need for your application, we put together a selection menu for you (the maximum working pressure of the whole valve is determined by the maximum permissible nominal pressure of the connecting part).
We supply what you put together.

Ball valve
A01 Ball valve 546

Material
B15 PVDF

Dimension
C05 d 16 DN 10 3/8"
C06 d 20 DN 15 1/2"
C07 d 25 DN 20 3/4"
C08 d 32 DN 25 1"
C09 d 40 DN 32 1 1/4"
C10 d 50 DN 40 1 1/2"
C11 d 63 DN 50 2"

Version
D01 standard, PTFE ball seal
D02 oil-free, PTFE ball seal (only with specific connecting parts)
D04 silicon-free, PVDF ball seal (only with specific connecting parts)

Seals
E01 EPDM seals
E02 FPM seals

Threaded inserts
F01 without threaded inserts
F02 with threaded inserts

Connecting parts
G50 PVDF Fusion socket metric
G51 PVDF Socket fusion spigot metric
G52 PVDF Butt fusion spigot IR Plus® metric
G53 PVDF Threaded socket NPT
G64 Fixed flange PVDF serrated metric

Multi-functional module
I01 No multi-functional module
I02 Empty module
I03 Module with 2 limit switches Ag, Ni
I04 Module with 2 limit switches Au
I05 Module with 2 inductive switches Namur
I06 Module with 2 inductive switches PNP
I07 Module with 2 inductive switches NPN

Handle
K01 Standard handle red
K02 Standard handle black
K11 Multi-functional handle red

Mounting plate
L01 without mounting plate
L02 with mounting plate

A01	B15	C	D	E	F	G	G	I	K	L
						left	right			

Copiable
GF ball valve type 546 with pneumatic actuator

It's so easy to configurate the type 546:
With the configurator, you have a choice of new pneumatic actuators PA11 and PA21 in 2 optimized sizes including a large range of accessories.

We supply what you put together.

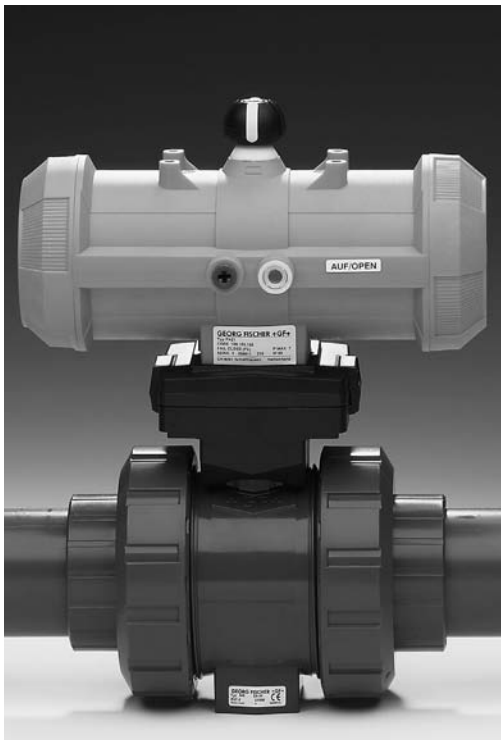

Pneumatic actuators PA11/PA21
P01 Fail safe to close PA11/PA21
P02 Fail safe to open PA11/21
P03 Double acting PA11/21
P30 Fail safe to close PA30/90
P31 Fail safe to open PA30/90
P32 Double acting PA30/90

Manual override
Q01 without manual override
Q02 with manual override

Stroke limiter
R01 without stroke limiter
R02 with stroke limiter

P	Q	R	

Valve ends ball valve type 546

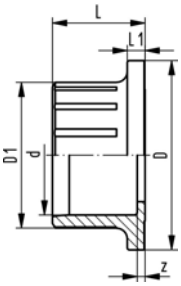

Valve end 546 PVC-U (G01)
With solvent cement socket metric

d [mm]	PN	Code	kg	D [mm]	D1 [mm]	L [mm]	L1 [mm]	z [mm]
16	16	**161 490 666**	0.009	38	23	18	4	4
20	16	**161 490 667**	0.011	38	27	20	4	4
25	16	**161 490 668**	0.016	44	33	23	5	4
32	16	**161 490 669**	0.025	53	41	26	5	4
40	16	**161 490 670**	0.043	65	51	31	5	5
50	16	**161 490 671**	0.064	77	62	34	6	3
63	16	**161 490 672**	0.119	99	77	41	7	3
75	16	**161 490 673**	0.227	125	92	49	9	4
90	16	**161 490 674**	0.376	150	110	57	10	5
110	16	**161 490 675**	0.639	180	134	69	11	5

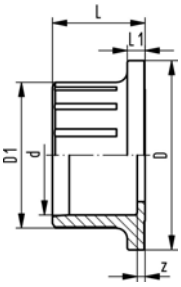

Valve end 546 PVC-U
With solvent cement socket metric

Model:

- Valve end 546 PVC-U to retrofit the ball valve 546 according the same z-dimension as for type 370 with nuts

d [mm]	PN	Code	kg	D [mm]	D1 [mm]	L [mm]	L1 [mm]	z [mm]
90	16	**161 491 084**	0.399	150	110	64	10	12
110	16	**161 491 085**	0.695	180	134	80	11	16

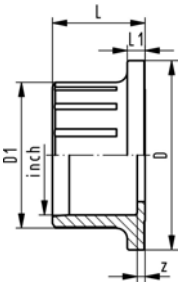

Valve end 546 PVC-U (G03)
With solvent cement socket Inch ASTM

Inch	d [mm]	PN	Code	kg	D [mm]	D1 [mm]	L [mm]	L1 [mm]	z [mm]
⅜	16	16	**161 490 712**	0.012	38	24	25	4	6
½	20	16	**161 490 713**	0.014	38	30	25	4	2
¾	25	16	**161 490 714**	0.020	44	35	28	5	3
1	32	16	**161 490 715**	0.031	53	43	31	5	3
1 ¼	40	16	**161 490 716**	0.046	65	53	34	5	3
1 ½	50	16	**161 490 717**	0.067	77	60	38	6	3
2	63	16	**161 490 718**	0.118	99	73	41	7	3
2 ½	75	16	**161 490 719**	0.241	125	92	49	9	4
3	90	16	**161 490 720**	0.394	150	110	57	10	9
4	110	16	**161 490 721**	0.582	180	134	69	11	11

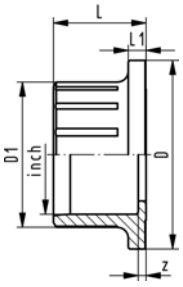

Valve end 546 PVC-U (G04)
With solvent cement socket Inch BS

Inch	d [mm]	PN	Code	kg	D [mm]	D1 [mm]	L [mm]	L1 [mm]	z [mm]
⅜	16	16	**161 490 734**	0.009	38	23	18	4	2
½	20	16	**161 490 735**	0.009	38	27	20	4	2
¾	25	16	**161 490 736**	0.013	44	33	23	5	2
1	32	16	**161 490 737**	0.022	53	41	26	5	2
1 ¼	40	16	**161 490 738**	0.036	65	51	31	5	2
1 ½	50	16	**161 490 739**	0.071	77	62	34	6	4
2	63	16	**161 490 740**	0.135	99	77	41	7	5
	75	16	**161 490 673**	0.227	125	92	49	9	4
3	90	16	**161 490 742**	0.390	150	110	57	10	6
4	110	16	**161 490 743**	0.577	180	134	69	11	5

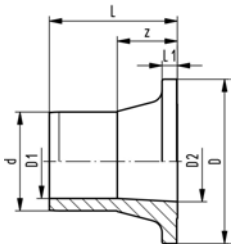

Valve end 546 PVC-U (G05)
With solvent cement spigot metric

d [mm]	PN	Code	kg	D [mm]	D1 [mm]	D2 [mm]	L [mm]	L1 [mm]	z [mm]
16	16	**161 490 701**	0.011	38	10	16	29	4	15
20	16	**161 490 702**	0.014	38	14	16	34	4	18
25	16	**161 490 703**	0.021	44	19	20	39	5	20
32	16	**161 490 704**	0.033	53	24	26	42	5	20
40	16	**161 490 705**	0.050	65	31	33	45	5	19
50	16	**161 490 706**	0.085	77	39	41	53	6	22
63	16	**161 490 707**	0.161	99	49	51	62	7	24
75	16	**161 490 708**	0.302	125	58	65	74	9	30
90	16	**161 490 709**	0.467	150	70	90	80	10	28
110	16	**161 490 710**	0.747	180	86	100	88	11	27

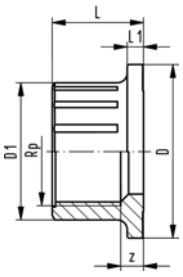

Valve end 546 PVC-U (G06)
With threaded socket Rp

Model:

- Connection to plastic thread only
- Do not use thread sealing pastes that are harmful to PVC-U

Rp [inch]	PN	Code	kg	D [mm]	D1 [mm]	L [mm]	L1 [mm]	z [mm]
⅜	10	**161 490 690**	0.011	38	24	20	4	7
½	10	**161 490 691**	0.013	38	28	22	4	6
¾	10	**161 490 692**	0.019	44	34	25	5	7
1	10	**161 490 693**	0.031	53	42	28	5	7
1 ¼	10	**161 490 694**	0.047	65	52	30	5	7
1 ½	10	**161 490 695**	0.081	77	63	32	6	9
2	10	**161 490 696**	0.150	99	78	38	7	10
2 ½	10	**161 490 697**	0.255	125	58	49	9	18
3	10	**161 490 698**	0.436	150	110	57	10	23
4	10	**161 490 699**	0.645	180	134	69	11	29

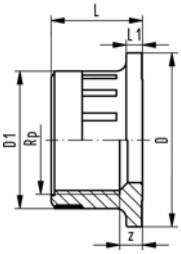

Valve end 546 PVC-U (G07)
With threaded socket Rp reinforced

Model:

- Connection to plastic or metal
- Reinforcing ring stainless (A2)
- Do not use thread sealing pastes that are harmful to PVC-U

Rp [inch]	PN	Code	kg	D [mm]	D1 [mm]	L [mm]	L1 [mm]	z [mm]
⅜	16	**161 490 825**	0.013	38	24	20	4	7
½	16	**161 490 826**	0.016	38	28	22	4	6
¾	16	**161 490 827**	0.023	44	34	25	5	7
1	16	**161 490 828**	0.040	53	42	28	5	7
1 ¼	16	**161 490 829**	0.058	65	52	30	5	7
1 ½	16	**161 490 830**	0.097	77	63	32	6	9
2	16	**161 490 831**	0.166	99	78	38	7	10

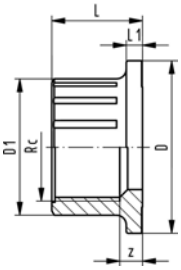

Valve end 546 PVC-U (G08)
With threaded socket Rc

Model:

- Connection to plastic thread only
- Do not use thread sealing pastes that are harmful to PVC-U

Rc [inch]	PN	Code	kg	D [mm]	D1 [mm]	L [mm]	L1 [mm]	z [mm]
½	10	**161 490 755**	0.013	38	28	22	4	5
¾	10	**161 490 756**	0.019	44	34	25	5	7
1	10	**161 490 757**	0.033	53	42	28	5	7
1 ¼	10	**161 490 758**	0.047	65	52	30	5	6
1 ½	10	**161 490 759**	0.081	77	63	32	6	8
2	10	**161 490 760**	0.150	99	78	38	7	9
2 ½	10	**161 490 761**	0.261	125	58	49	9	18
3	10	**161 490 762**	0.444	150	110	57	10	23
4	10	**161 490 763**	0.682	180	134	69	11	29

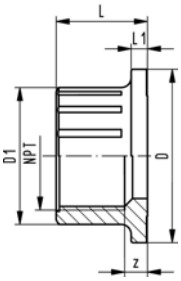

Valve end 546 PVC-U (G09)
With threaded socket NPT

Model:

- Connection to plastic thread only
- Do not use thread sealing pastes that are harmful to PVC-U

NPT [inch]	PN	Code	kg	D [mm]	D1 [mm]	L [mm]	L1 [mm]	z [mm]
⅜	10	**161 490 723**	0.014	38	26	21	4	7
½	10	**161 490 724**	0.019	38	33	21	4	4
¾	10	**161 490 725**	0.026	44	39	23	5	5
1	10	**161 490 726**	0.043	53	47	28	5	6
1 ¼	10	**161 490 727**	0.064	65	57	31	5	7
1 ½	10	**161 490 728**	0.093	77	65	34	6	11
2	10	**161 490 729**	0.157	99	77	41	7	17
2 ½	10	**161 490 730**	0.287	125	58	49	9	15
3	10	**161 490 731**	0.451	150	110	57	10	21
4	10	**161 490 732**	0.692	180	134	69	11	31

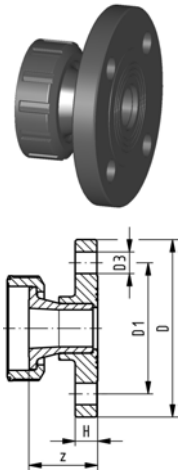

Valve end 546 PVC-U (G60)
Assembly with fixed flange serrated PVC-U metric

Model:

- Joint made with special adhesive Tangit for PVC-U
- Connecting dimensions: ISO 7005 / EN 1092 / DIN 2501 PN10 / BS4504

d [mm]	DN [mm]	PN	Code	kg	D [mm]	D1 [mm]	D3 [mm]	H [mm]	z [mm]
20	15	16	**161 486 360**	0.131	95	65	14	12	37
25	20	16	**161 486 361**	0.175	105	75	14	13	42
32	25	16	**161 486 362**	0.256	115	85	14	15	45
40	32	16	**161 486 363**	0.417	140	100	18	17	48
50	40	16	**161 486 364**	0.544	150	110	18	18	56
63	50	16	**161 486 365**	0.861	165	125	18	20	65

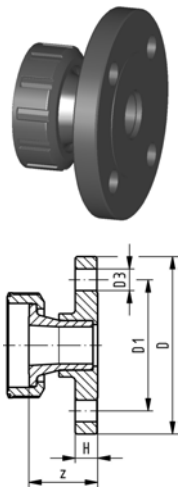

Valve end 546 PVC-U (G61)
Assembly with fixed flange flat PVC-U metric

Model:

- Joint made with special adhesive Tangit for PVC-U
- Connecting dimensions: ISO 7005 / EN 1092 / DIN 2501 PN10 / BS4504

d [mm]	DN [mm]	PN	Code	kg	D [mm]	D1 [mm]	D3 [mm]	H [mm]	z [mm]
20	15	16	**161 486 295**	0.136	95	65	14	12	37
25	20	16	**161 486 296**	0.175	105	75	14	13	42
32	25	16	**161 486 297**	0.254	115	85	14	15	45
40	32	16	**161 486 298**	0.417	140	100	18	17	48
50	40	16	**161 486 299**	0.541	150	110	18	18	56
63	50	16	**161 486 300**	0.861	165	125	18	20	65

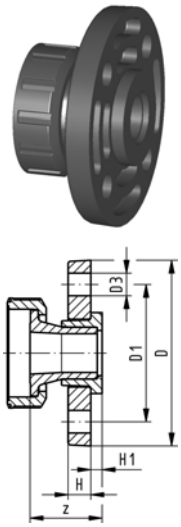

Valve end 546 PVC-U (G70)
Assembly with backing flange PVC-U metric

Model:

- Joint made with special adhesive Tangit for PVC-U
- Connecting dimensions: ISO 7005 / EN 1092 / DIN 2501 PN10 / BS4504

d [mm]	DN [mm]	PN	Code	kg	D [mm]	D1 [mm]	D3 [mm]	H [mm]	H1 [mm]	z [mm]
20	15	16	**161 486 265**	0.110	95	65	14	11	6	37
25	20	16	**161 486 266**	0.155	105	75	14	12	7	42
32	25	16	**161 486 267**	0.230	115	85	14	14	7	45
40	32	16	**161 486 268**	0.360	140	100	18	15	8	48
50	40	16	**161 486 269**	0.500	150	110	18	16	8	56
63	50	16	**161 486 270**	0.770	165	125	18	18	9	65
New 75	65	10	**161 486 271**	1.429	185	145	18	19	10	77
New 90	80	10	**161 486 272**	2.109	200	160	18	20	11	85
New 110	100	10	**161 486 273**	3.067	220	180	18	22	12	93

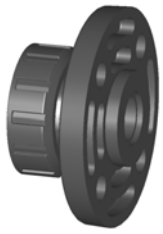

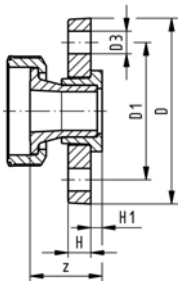

Valve end 546 PVC-U (G71)
Assembly with backing flange PVC-U
Inch ANSI

Model:

- Joint made with special adhesive Tangit for PVC-U
- Connecting dimensions: ANSI/ASME B 16.5, ASTM D 4024, BS 1560 (bolt circle 150 lbs)

Inch	d [mm]	PN	Code	kg	D [mm]	D1 [mm]	D3 [mm]	H [mm]	H1 [mm]	z [mm]
½	20	16	**161 486 275**	0.110	95	60	14	11	6	37
¾	25	16	**161 486 276**	0.150	105	70	14	12	7	42
1	32	16	**161 486 277**	0.225	115	79	14	14	7	45
1 ¼	40	16	**161 486 278**	0.375	140	89	18	15	8	48
1 ½	50	16	**161 486 279**	0.495	150	98	18	16	8	56
2	63	16	**161 486 280**	0.760	165	121	18	18	9	65
New 2 ½	75	10	**161 486 281**	1.429	185	140	19	19	10	77
New 3	90	10	**161 486 282**	2.109	200	152	19	20	11	85
New 4	110	10	**161 486 283**	3.067	220	190	19	22	12	93

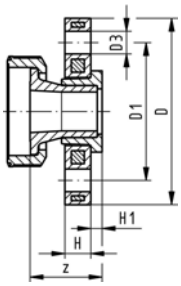

Valve end 546 PVC-U (G72)
Assembly with backing flange PP-St metric

Model:

- Joint made with special adhesive Tangit for PVC-U
- Connecting dimensions: ISO 7005 / EN 1092 / DIN 2501 PN10 / BS4504

d [mm]	DN [mm]	PN	Code	kg	D [mm]	D1 [mm]	D3 [mm]	H [mm]	H1 [mm]	z [mm]
20	15	16	**161 486 285**	0.265	95	65	14	12	6	37
25	20	16	**161 486 286**	0.325	105	75	14	12	7	42
32	25	16	**161 486 287**	0.530	115	85	14	16	7	45
40	32	16	**161 486 288**	0.815	140	100	18	16	8	48
50	40	16	**161 486 289**	1.070	150	110	18	18	8	56
63	50	16	**161 486 290**	1.395	165	125	18	18	9	65
New 75	65	16	**161 486 291**	2.319	185	145	18	18	10	77
New 90	80	16	**161 486 292**	2.905	200	160	18	20	11	85
New 110	100	16	**161 486 293**	4.079	220	180	18	20	12	93

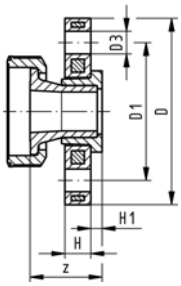

Valve end 546 PVC-U (G73)
Assembly with backing flange PP-St inch

Model:

- Joint made with special adhesive Tangit for PVC-U
- Connecting dimensions: ANSI/ASME B 16.5, ASTM D 4024, BS 1560 (bolt circle 150 lbs)

Inch	DN [mm]	PN	Code	kg	D [mm]	D1 [mm]	D3 [mm]	H [mm]	H1 [mm]	z [mm]
½	15	16	**161 486 425**	0.250	95	60	16	12	6	37
¾	20	16	**161 486 426**	0.310	105	70	16	12	7	42
1	25	16	**161 486 427**	0.520	115	79	16	16	7	45
1 ¼	32	16	**161 486 428**	0.835	140	89	16	16	8	48
1 ½	40	16	**161 486 429**	1.110	150	98	16	18	8	56
2	50	16	**161 486 430**	1.385	165	121	19	18	9	65
New 2 ½	65	16	**161 486 431**	2.319	185	140	19	18	10	77
New 3	80	16	**161 486 432**	2.905	200	152	19	20	11	85
New 4	100	16	**161 486 433**	4.079	229	190	19	20	12	93

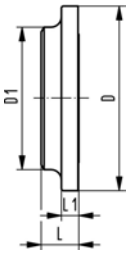

Valve end blank 546 PVC-U (G80)

Model:

- Jointing face flat

d [mm]	DN [mm]	Inch	PN	Code	kg	D [mm]	D1 [mm]	L [mm]	L1 [mm]
20	15	½	16	**161 490 837**	0.009	38	23	8	4
25	20	¾	16	**161 490 838**	0.013	44	33	10	5
32	25	1	16	**161 490 839**	0.021	53	41	11	5
40	32	1 ¼	16	**161 490 840**	0.034	65	51	11	5
50	40	1 ½	16	**161 490 841**	0.057	77	62	14	6
63	50	2	16	**161 490 842**	0.113	99	77	17	7

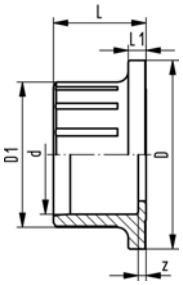

Valve end 546 PVC-C (G11)
With solvent cement socket metric

d [mm]	PN	Code	kg	D [mm]	D1 [mm]	L [mm]	L1 [mm]	z [mm]
16	16	**163 481 275**	0.009	38	23	18	4	4
20	16	**163 481 276**	0.011	38	27	20	4	4
25	16	**163 481 277**	0.016	44	33	23	5	4
32	16	**163 481 278**	0.025	53	41	26	5	4
40	16	**163 481 279**	0.043	65	51	31	5	5
50	16	**163 481 280**	0.064	77	62	34	6	3
63	16	**163 481 281**	0.119	99	77	41	7	3
75	16	**163 481 282**	0.249	125	92	49	9	4
90	16	**163 481 283**	0.416	150	110	57	10	5
110	16	**163 481 284**	0.705	180	134	69	11	5

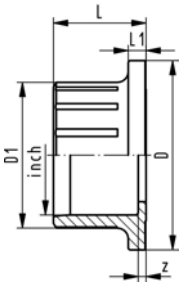

Valve end 546 PVC-C (G13)
With solvent cement socket Inch ASTM

Inch	d [mm]	PN	Code	kg	D [mm]	D1 [mm]	L [mm]	L1 [mm]	z [mm]
⅜	16	16	**163 481 311**	0.012	38	24	25	4	6
½	20	16	**163 481 312**	0.014	38	30	25	4	2
¾	25	16	**163 481 313**	0.020	44	35	28	5	3
1	32	16	**163 481 314**	0.031	53	43	31	5	3
1 ¼	40	16	**163 481 315**	0.046	65	53	34	5	3
1 ½	50	16	**163 481 316**	0.067	77	60	38	6	3
2	63	16	**163 481 317**	0.118	99	73	41	7	3
2 ½	75	16	**163 481 318**	0.266	125	92	49	9	4
3	90	16	**163 481 319**	0.394	150	110	57	10	8
4	110	16	**163 481 320**	0.651	180	134	69	11	11

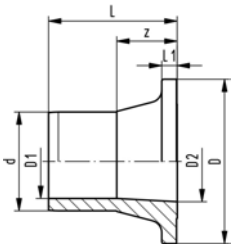

Valve end 546 PVC-C (G14)
With solvent cement spigot metric

d [mm]	PN	Code	kg	D [mm]	D1 [mm]	D2 [mm]	L [mm]	L1 [mm]	z [mm]
16	16	**163 481 300**	0.012	38	10	16	29	4	15
20	16	**163 481 301**	0.015	38	14	16	34	4	18
25	16	**163 481 302**	0.023	44	19	20	39	5	20
32	16	**163 481 303**	0.040	53	24	26	42	5	20
40	16	**163 481 304**	0.054	65	31	33	45	5	19
50	16	**163 481 305**	0.093	77	39	41	53	6	22
63	16	**163 481 306**	0.177	99	49	51	62	7	24
75	16	**163 481 307**	0.333	125	58	65	74	9	30
90	16	**163 481 308**	0.515	150	70	90	80	10	28
110	16	**163 481 309**	0.822	180	86	100	88	11	27

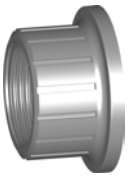

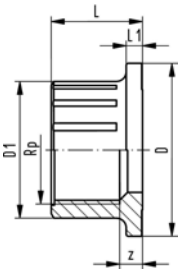

Valve end 546 PVC-C (G15)
With threaded socket Rp

Model:

- Connection to plastic thread only
- Do not use thread sealing pastes that are harmful to PVC-C

Rp [inch]	PN	Code	kg	D [mm]	D1 [mm]	L [mm]	L1 [mm]	z [mm]
⅜	10	**163 481 286**	0.011	38	24	20	4	7
½	10	**163 481 287**	0.013	38	28	22	4	6
¾	10	**163 481 288**	0.019	44	34	25	5	7
1	10	**163 481 289**	0.031	53	42	28	5	7
1 ¼	10	**163 481 290**	0.047	65	52	30	5	7
1 ½	10	**163 481 291**	0.081	77	63	32	6	9
2	10	**163 481 292**	0.150	99	78	38	7	10
2 ½	10	**163 481 293**	0.282	125	58	49	9	19
3	10	**163 481 294**	0.481	150	110	57	10	23
4	10	**163 481 295**	0.735	180	134	69	11	29

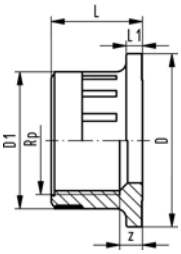

Valve end 546 PVC-C (G16)
With threaded socket Rp reinforced

Model:

- Connection to plastic or metal
- Reinforcing ring stainless (A2)
- Do not use thread sealing pastes that are harmful to PVC-C

Rp [inch]	PN	Code	kg	D [mm]	D1 [mm]	L [mm]	L1 [mm]	z [mm]
⅜	16	**163 481 400**	0.014	38	24	20	4	7
½	16	**163 481 401**	0.018	38	28	22	4	6
¾	16	**163 481 402**	0.025	44	34	25	5	7
1	16	**163 481 403**	0.044	53	42	28	5	7
1 ¼	16	**163 481 404**	0.064	65	52	30	5	7
1 ½	16	**163 481 405**	0.106	77	63	32	6	9
2	16	**163 481 406**	0.182	99	78	38	7	10

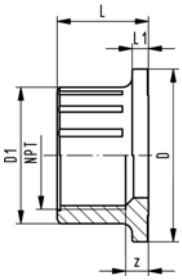

Valve end 546 PVC-C (G17)
With threaded socket NPT

Model:

- Connection to plastic thread only
- Do not use thread sealing pastes that are harmful to PVC-C

NPT [inch]	PN	Code	kg	D [mm]	D1 [mm]	L [mm]	L1 [mm]	z [mm]
⅜	10	**163 481 322**	0.014	38	26	21	4	7
½	10	**163 481 323**	0.019	38	33	21	4	4
¾	10	**163 481 324**	0.026	44	39	23	5	5
1	10	**163 481 325**	0.043	53	47	28	5	6
1 ¼	10	**163 481 326**	0.064	65	57	31	5	7
1 ½	10	**163 481 327**	0.093	77	65	34	6	11
2	10	**163 481 328**	0.157	99	77	41	7	17
2 ½	10	**163 481 329**	0.317	125	58	49	9	15
3	10	**163 481 330**	0.497	150	110	57	10	21
4	10	**163 481 331**	0.763	180	134	69	11	31

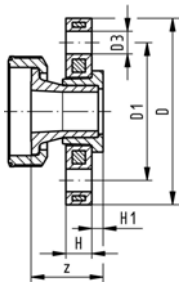

Valve end 546 PVC-C (G72)
Assembly with backing flange PP-St metric

Model:

- Joint made with special adhesive Tangit for PVC-C
- Connecting dimensions: ISO 7005 / EN 1092 / DIN 2501 PN10 / BS4504

d [mm]	DN [mm]	PN	Code	kg	D [mm]	D1 [mm]	D3 [mm]	H [mm]	H1 [mm]	z [mm]
20	15	16	**163 481 412**	0.265	95	65	14	12	6	37
25	20	16	**163 481 413**	0.330	105	75	14	12	7	42
32	25	16	**163 481 414**	0.540	115	85	14	16	7	45
40	32	16	**163 481 415**	0.820	140	100	18	16	8	48
50	40	16	**163 481 416**	1.075	150	110	18	18	8	56
63	50	16	**163 481 417**	1.435	165	125	18	18	9	65
New 75	65	16	**163 481 418**	2.459	185	145	18	18	10	77
New 90	80	16	**163 481 419**	3.309	200	160	18	20	11	85
New 110	100	16	**163 481 420**	4.557	220	180	18	20	12	93

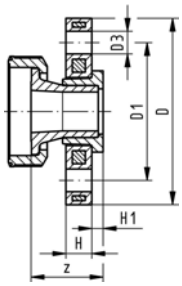

Valve end 546 PVC-C (G73)
Assembly with backing flange PP-St Inch ANSI

Model:

- Joint made with special adhesive Tangit for PVC-C
- Connecting dimensions: ANSI/ASME B 16.5, ASTM D 4024, BS 1560 (bolt circle 150 lbs)

Inch	DN [mm]	PN	Code	kg	D [mm]	D1 [mm]	D3 [mm]	H [mm]	H1 [mm]	z [mm]
½	15	16	**163 481 425**	0.255	95	60	16	12	6	37
¾	20	16	**163 481 426**	0.316	105	70	16	12	7	42
1	25	16	**163 481 427**	0.530	115	79	16	16	7	45
1 ¼	32	16	**163 481 428**	0.835	140	89	16	16	8	47
1 ½	40	16	**163 481 429**	1.135	150	98	16	18	8	56
2	50	16	**163 481 430**	1.435	165	121	19	18	9	65
New 2 ½	65	16	**163 481 431**	2.459	185	140	19	18	10	77
New 3	80	16	**163 481 432**	3.309	200	152	19	20	11	85
New 4	100	16	**163 481 433**	4.557	229	190	19	20	12	93

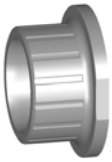

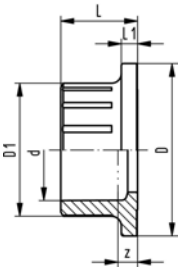

Valve end 546 PP-H (G30)
With fusion socket metric

d [mm]	PN	Code	kg	D [mm]	D1 [mm]	L [mm]	L1 [mm]	z [mm]
16	10	**167 482 900**	0.006	38	23	19	4	5
20	10	**167 482 901**	0.007	38	27	20	4	5
25	10	**167 482 902**	0.011	44	33	22	5	6
32	10	**167 482 903**	0.017	53	41	24	5	6
40	10	**167 482 904**	0.027	65	51	26	5	7
50	10	**167 482 905**	0.040	77	62	29	6	8
63	10	**167 482 906**	0.070	99	77	34	7	6
75	10	**167 482 907**	0.168	125	92	49	9	20
90	10	**167 482 908**	0.272	150	110	57	10	24
110	10	**167 482 909**	0.467	180	134	69	11	30

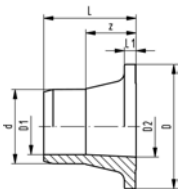

Valve end 546 PP-H (G32)
With socket fusion spigot metric

d [mm]	PN	Code	kg	D [mm]	D1 [mm]	D2 [mm]	L [mm]	L1 [mm]	L2 [mm]	z [mm]
16	10	**167 482 922**	0.007	38	10	16	27	4	13	14
20	10	**167 482 923**	0.009	38	14	16	32	4	14	18
25	10	**167 482 924**	0.013	44	19	20	37	5	16	21
32	10	**167 482 925**	0.021	53	24	26	40	5	18	22
40	10	**167 482 926**	0.032	65	31	33	43	5	20	23
50	10	**167 482 927**	0.055	77	39	41	51	6	23	28
63	10	**167 482 928**	0.103	99	49	51	60	7	27	33
75	10	**167 482 929**	0.195	125	58	65	72	9	48	24
90	10	**167 482 930**	0.307	150	70	90	78	10	48	29
110	10	**167 482 931**	0.495	180	86	100	86	11	54	32

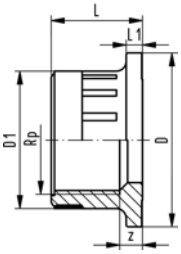

Valve end 546 PP-H (G33)
With threaded socket Rp reinforced

Model:

- Connection to plastic or metal
- Reinforcing ring stainless (A2)
- Do not use thread sealing pastes that are harmful to PP

Rp [inch]	PN	Code	kg	D [mm]	D1 [mm]	L [mm]	L1 [mm]	z [mm]
⅜	16	**167 482 911**	0.008	38	24	20	4	7
½	16	**167 482 912**	0.009	38	28	21	4	6
¾	16	**167 482 913**	0.012	44	34	23	5	7
1	16	**167 482 914**	0.024	53	42	28	5	7
1 ¼	16	**167 482 915**	0.037	65	52	31	5	7
1 ½	16	**167 482 916**	0.052	77	63	34	6	9
2	16	**167 482 917**	0.091	99	78	41	7	10

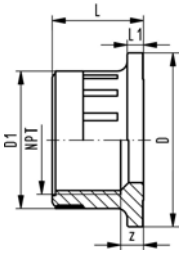

Valve end 546 PP-H (G34)
With threaded socket NPT reinforced

Model:

- Connection to plastic or metal
- Reinforcing ring stainless (A2)
- Do not use thread sealing pastes that are harmful to PP

NPT [inch]	PN	Code	kg	D [mm]	D1 [mm]	L [mm]	L1 [mm]	z [mm]
⅜	16	**167 482 966**	0.008	38	26	20	4	7
½	16	**167 482 967**	0.009	38	33	21	4	4
¾	16	**167 482 968**	0.012	44	39	23	5	5
1	16	**167 482 969**	0.024	53	47	28	5	6
1 ¼	16	**167 482 970**	0.037	65	57	31	5	7
1 ½	16	**167 482 971**	0.052	77	65	34	6	11
2	16	**167 482 972**	0.091	99	77	41	7	17

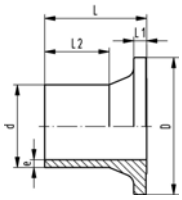

Valve end 546 PP-H (G35)
With butt fusion spigot IR-Plus® SDR11 metric

d [mm]	FM	PN	Code	kg	D [mm]	e [mm]	L [mm]	L1 [mm]	L2 [mm]
20	IR	10	**167 482 945**	0.007	38	1,9	37	4	25
25	IR	10	**167 482 946**	0.011	44	2,3	39	5	25
32	IR	10	**167 482 947**	0.017	53	3	40	5	25
40	IR	10	**167 482 948**	0.028	65	3,7	43	5	25
50	IR	10	**167 482 949**	0.045	77	4,6	51	6	25
63	IR	10	**167 482 950**	0.096	99	5,8	60	7	28
75	IR	10	**167 482 951**	0.193	125	8.2	65	9	41
90	IR	10	**167 482 952**	0.270	150	9.9	62	10	33
110	IR	10	**167 482 953**	0.421	180	12	69	11	37

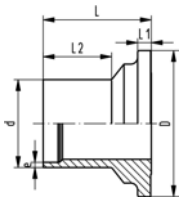

Valve end 546 PP-H (G36)
With butt fusion spigot SDR17,6 metric

d [mm]	PN	Code	kg	D [mm]	e [mm]	L [mm]	L1 [mm]	L2 [mm]
40	6	**167 482 937**	0.032	65	2,3	43	5	25
50	6	**167 482 938**	0.053	77	2,9	51	6	25
63	6	**167 482 939**	0.099	99	3,6	60	7	28
75	6	**167 482 940**	0.189	125	4.65	65	9	41
90	6	**167 482 941**	0.265	150	5.5	62	10	33
110	6	**167 482 942**	0.414	180	6.75	69	11	37

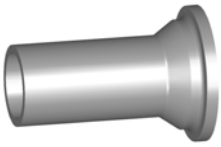

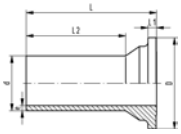

Valve end 546 PP-H (G37)
With butt fusion spigot long SDR11 metric

d [mm]	PN	Code	kg	D [mm]	e [mm]	L [mm]	L1 [mm]	L2 [mm]
20	10	**167 482 956**	0.012	38	2,3	69	4	53
25	10	**167 482 957**	0.019	44	2,3	76	5	58
32	10	**167 482 958**	0.029	53	3	76	5	58
40	10	**167 482 959**	0.048	65	3,7	82	5	61
50	10	**167 482 960**	0.082	77	4,6	91	6	63
63	10	**167 482 961**	0.157	99	5,8	110	7	77

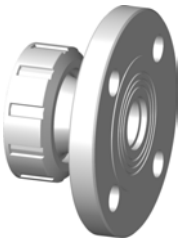

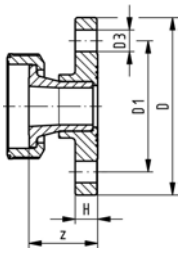

Valve end 546 PP-H (G63)
With fixed flange serrated PP-H metric

Model:

- Connecting dimension: ISO 7005 PN10, EN 1092 PN10, DIN 2501 PN10

d [mm]	DN [mm]	PN	Code	kg	D [mm]	D1 [mm]	D3 [mm]	H [mm]	z [mm]
20	15	10	**167 484 160**	0.090	94	65	14	12	37
25	20	10	**167 484 161**	0.115	103	75	14	13	42
32	25	10	**167 484 162**	0.170	115	85	14	14	45
40	32	10	**167 484 163**	0.275	138	100	18	15	48
50	40	10	**167 484 164**	0.355	148	110	18	16	56
63	50	10	**167 484 165**	0.565	163	125	18	18	65

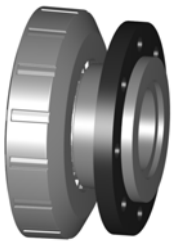

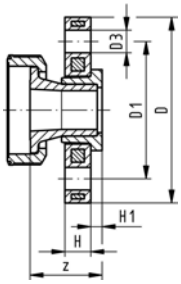

Valve end 546 PP-H (G72)
Assembly with backing flange PP-St metric

Model:

- Overall length according to EN 558-1
- Connecting dimensions: ISO 7005, EN 1092, BS 4504, DIN 2501; bolt circle PN 10

d [mm]	DN [mm]	PN	Code	kg	D [mm]	D1 [mm]	D3 [mm]	H [mm]	H1 [mm]	z [mm]
75	65	10	**167 484 418**	1.834	185	145	18	18	16	77
New 90	80	10	**167 484 419**	2.592	200	160	18	20	17	85
New 110	100	10	**167 484 420**	3.272	220	180	18	20	18	93

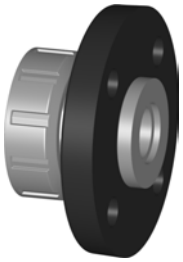

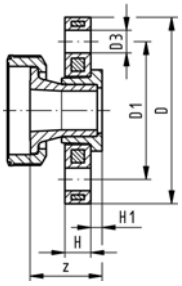

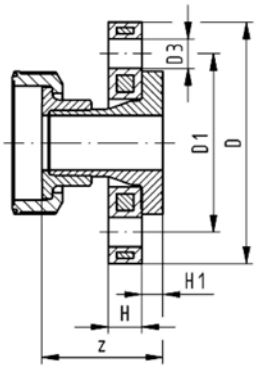

Valve end 546 PP-H (G73)
With backing flange PP-St inch ANSI

Model:

- DN15-50 overall length **NOT** according to EN 558-1
- DN 65-100 overall length according to EN 558-1
- Connecting dimension: ISO 7005 PN10, EN 1092 PN10, DIN 2501 PN10

Inch	DN [mm]	PN	Code	kg	D [mm]	D1 [mm]	D3 [mm]	H [mm]	H1 [mm]	z [mm]
½	15	10	**167 484 065**	0.224	95	60	16	12	7	54
¾	20	10	**167 484 066**	0.305	105	70	16	12	9	55
1	25	10	**167 484 067**	0.505	115	79	16	16	10	58
1 ¼	32	10	**167 484 068**	0.810	140	89	16	16	11	60
1 ½	40	10	**167 484 069**	1.050	150	98	19	18	12	66
2	50	10	**167 484 070**	1.290	165	121	19	18	14	68
New 2 ½	65	10	**167 484 071**	2.161	185	140	19	18	16	77
New 3	80	10	**167 484 072**	2.818	200	152	19	20	17	85
New 4	100	10	**167 484 073**	3.741	229	190	19	20	18	93

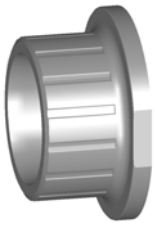

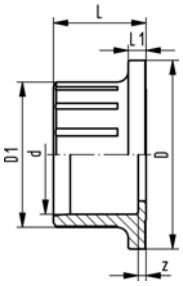

Valve end 546 ABS (G20)
With solvent cement socket metric

d [mm]	PN	Code	kg	D [mm]	D1 [mm]	L [mm]	L1 [mm]	z [mm]
16	10	**169 480 775**	0.006	38	23	18	4	4
20	10	**169 480 776**	0.008	38	27	20	4	4
25	10	**169 480 777**	0.012	44	33	22	5	4
32	10	**169 480 778**	0.019	53	41	26	5	4
40	10	**169 480 779**	0.031	65	51	31	5	5
50	10	**169 480 780**	0.047	77	62	34	6	3
63	10	**169 480 781**	0.086	99	77	41	7	3
75	10	**169 480 782**	0.175	125	92	49	9	4
90	10	**169 480 783**	0.292	150	110	57	10	5
110	10	**169 480 784**	0.495	180	134	69	11	5

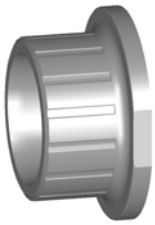

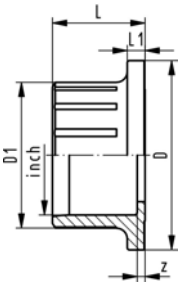

Valve end 546 ABS (G21)
With solvent cement socket Inch BS

Inch	d [mm]	PN	Code	kg	D [mm]	D1 [mm]	L [mm]	L1 [mm]	z [mm]
⅜	16	10	**169 480 800**	0.007	38	23	18	4	2
½	20	10	**169 480 801**	0.007	38	27	20	4	2
¾	25	10	**169 480 802**	0.009	44	33	23	5	2
1	32	10	**169 480 803**	0.016	53	41	26	5	2
1 ¼	40	10	**169 480 804**	0.026	65	51	31	5	2
1 ½	50	10	**169 480 805**	0.052	77	62	34	6	4
2	63	10	**169 480 806**	0.098	99	77	41	7	5
	75	10	**169 480 782**	0.175	125	92	49	9	4
3	90	10	**169 480 808**	0.300	150	110	57	10	6
4	110	10	**169 480 809**	0.446	180	134	69	11	5

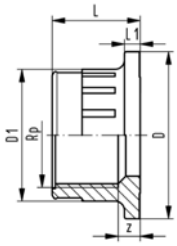

Valve end 546 ABS (G22)
With threaded socket Rp

Model:

- Connection to plastic thread only
- Do not use thread sealing pastes that are harmful to ABS

Rp [inch]	PN	Code	kg	D [mm]	D1 [mm]	L [mm]	L1 [mm]	z [mm]
⅜	10	**169 480 786**	0.008	38	24	20	4	7
½	10	**169 480 787**	0.009	38	28	22	4	6
¾	10	**169 480 788**	0.014	44	34	25	5	7
1	10	**169 480 789**	0.023	53	42	28	5	7
1 ¼	10	**169 480 790**	0.034	65	52	30	5	7
1 ½	10	**169 480 791**	0.059	77	63	32	6	9
2	10	**169 480 792**	0.109	99	78	38	7	10

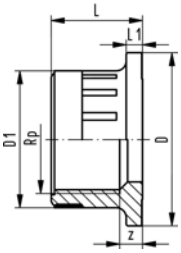

Valve end 546 ABS (G23)
With threaded socket Rp reinforced

Model:

- Connection to plastic or metal
- Reinforcing ring stainless (A2)
- Do not use thread sealing pastes that are harmful to ABS

Rp [inch]	PN	Code	kg	D [mm]	D1 [mm]	L [mm]	L1 [mm]	z [mm]
⅜	16	**169 480 925**	0.008	38	24	20	4	7
½	16	**169 480 926**	0.010	38	28	22	4	6
¾	16	**169 480 927**	0.014	44	34	25	5	7
1	16	**169 480 928**	0.023	53	42	28	5	7
1 ¼	16	**169 480 929**	0.035	65	52	30	5	7
1 ½	16	**169 480 930**	0.060	77	63	32	6	9
2	16	**169 480 931**	0.110	99	78	38	7	10

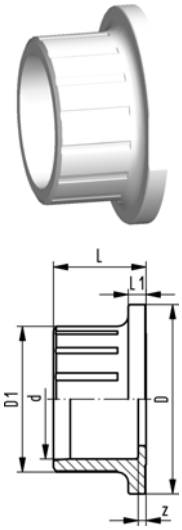

Valve end 546 PVDF (G50)
With fusion socket metric

d [mm]	PN	Code	kg	D [mm]	D1 [mm]	L [mm]	L1 [mm]	z [mm]
16	16	**175 483 025**	0.013	38	23	19	4	5
20	16	**175 483 026**	0.014	38	27	20	4	5
25	16	**175 483 027**	0.014	44	33	22	5	6
32	16	**175 483 028**	0.023	53	41	24	5	6
40	16	**175 483 029**	0.065	65	51	26	5	7
50	16	**175 483 030**	0.094	77	62	29	6	8
63	16	**175 483 031**	0.180	99	77	34	7	8

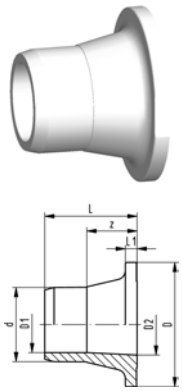

Valve end 546 PVDF (G51)
With socket fusion spigot metric

d [mm]	PN	Code	kg	D [mm]	D1 [mm]	D2 [mm]	L [mm]	L1 [mm]	L2 [mm]	z [mm]
16	16	**175 483 036**	0.014	38	10	16	27	4	13	14
20	16	**175 483 037**	0.018	38	14	16	32	4	14	18
25	16	**175 483 038**	0.028	44	19	20	37	5	16	21
32	16	**175 483 039**	0.047	53	24	26	40	5	18	22
40	16	**175 483 040**	0.065	65	31	33	43	5	20	23
50	16	**175 483 041**	0.112	77	39	41	51	6	23	28
63	16	**175 483 042**	0.210	99	49	51	60	7	27	33

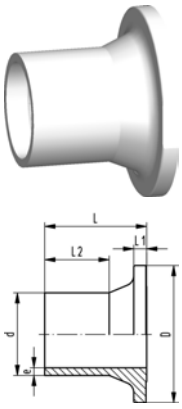

Valve end 546 PVDF (G52)
With butt fusion spigot IR-Plus® metric

d [mm]	FM	PN	Code	kg	D [mm]	e [mm]	L [mm]	L1 [mm]	L2 [mm]
20	IR	16	**175 483 048**	0.015	38	1,9	37	4	25
25	IR	16	**175 483 049**	0.022	44	1,9	39	5	25
32	IR	16	**175 483 050**	0.035	53	2,4	40	5	25
40	IR	16	**175 483 051**	0.056	65	2,4	43	5	25
50	IR	16	**175 483 052**	0.101	77	3	51	6	25
63	IR	16	**175 483 053**	0.188	99	3	60	7	28

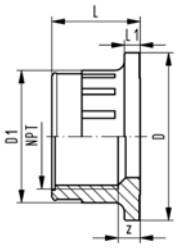

Valve end 546 PVDF (G53)
With threaded socket NPT

Model:

- Connection to plastic thread only
- Do not use thread sealing pastes that are harmful to PVDF

NPT [inch]	PN	Code	kg	D [mm]	D1 [mm]	D2 [mm]	L [mm]	L1 [mm]	z [mm]
⅜	10	**175 483 058**	0.010	38	26	14	20	4	6
½	10	**175 483 059**	0.014	38	33	16	21	4	4
¾	10	**175 483 060**	0.022	44	39	20	23	5	5
1	10	**175 483 061**	0.040	53	47	26	28	5	6
1 ¼	10	**175 483 062**	0.070	65	55	33	31	5	8
1 ½	10	**175 483 063**	0.100	77	65	41	34	6	11
2	10	**175 483 064**	0.180	99	77	51	41	7	17

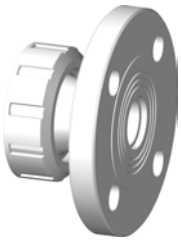

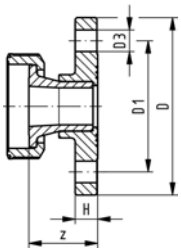

Valve end 546 PVDF (G64)
With fixed flange serrated PVDF metric

Model:

- Connecting dimension: ISO 7005 PN10, EN 1092 PN10, DIN 2501 PN10

d [mm]	DN [mm]	PN	Code	kg	D [mm]	D1 [mm]	D3 [mm]	H [mm]	z [mm]
20	15	16	**175 483 285**	0.170	93	65	14	12	37
25	20	16	**175 483 286**	0.230	103	75	14	13	42
32	25	16	**175 483 287**	0.330	115	85	14	14	45
40	32	16	**175 483 288**	0.540	137	100	18	15	48
50	40	16	**175 483 289**	0.710	147	110	18	16	56
63	50	16	**175 483 290**	1.120	162	125	18	18	65

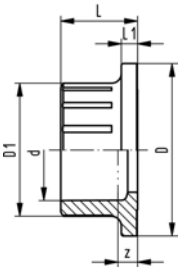

Valve end 546 PE 100 (G40)
With fusion socket metric

d [mm]	PN	Code	kg	D [mm]	D1 [mm]	L [mm]	L1 [mm]	z [mm]
16	16	**193 480 175**	0.007	38	23	19	4	5
20	16	**193 480 176**	0.008	38	27	20	4	5
25	16	**193 480 177**	0.012	44	33	22	5	6
32	16	**193 480 178**	0.019	53	41	24	5	6
40	16	**193 480 179**	0.033	65	51	26	5	7
50	16	**193 480 180**	0.050	77	62	29	6	8
63	16	**193 480 181**	0.095	99	77	34	7	8

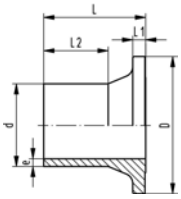

Valve end 546 PE 100 (G41)
With butt fusion spigot SDR11 metric

d [mm]	FM	PN	Code	kg	D [mm]	e [mm]	L [mm]	L1 [mm]	L2 [mm]
20	IR	16	**193 480 102**	0.007	38	1,9	37	4	25
25	IR	16	**193 480 103**	0.011	44	2,3	39	5	25
32	IR	16	**193 480 104**	0.017	53	3	40	5	25
40	IR	16	**193 480 105**	0.028	65	3,7	43	5	25
50	IR	16	**193 480 106**	0.045	77	4,6	51	6	25
63	IR	16	**193 480 107**	0.096	99	5,8	60	7	28

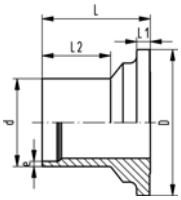

Valve end 546 PE 100 (G42)
With butt fusion spigot SDR17,6 metric

d [mm]	FM	PN	Code	kg	D [mm]	e [mm]	L [mm]	L1 [mm]	L2 [mm]
40	IR	10	**193 480 086**	0.028	65	2,3	43	5	25
50	IR	10	**193 480 087**	0.045	77	2,9	51	6	25
63	IR	10	**193 480 088**	0.096	99	3,6	60	7	28

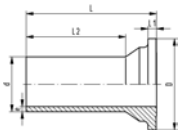

Valve end 546 PE 100 (G43)
With butt fusion spigot long SDR11 metric

d [mm]	PN	Code	kg	D [mm]	e [mm]	L [mm]	L1 [mm]	L2 [mm]
20	16	**193 480 152**	0.012	38	2,25	69	4	53
25	16	**193 480 153**	0.019	44	2,3	76	5	58
32	16	**193 480 154**	0.029	53	3	76	5	58
40	16	**193 480 155**	0.048	65	3,7	82	5	61
50	16	**193 480 156**	0.082	77	4,6	91	6	63
63	16	**193 480 157**	0.157	99	5,8	110	7	77
75	16	**193 480 158**	0.277	125	6,8	125	9	89
90	16	**193 480 159**	0.439	150	8,2	140	10	103
110	16	**193 480 160**	0.731	180	10	160	11	117

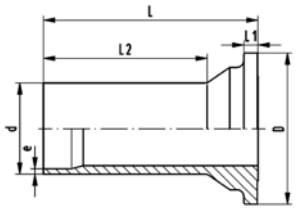

Valve end 546 PE 100 (G44)
With butt fusion spigot long SDR17,6 metric

d [mm]	PN	Code	kg	D [mm]	e [mm]	L [mm]	L1 [mm]	L2 [mm]
75	16	**193 480 168**	0.263	125	4.3	125	9	89
90	16	**193 480 169**	0.415	150	5.1	140	10	103
110	16	**193 480 170**	0.683	180	6.3	160	11	117

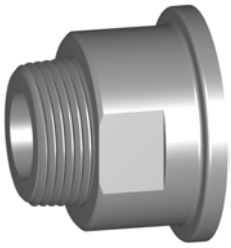

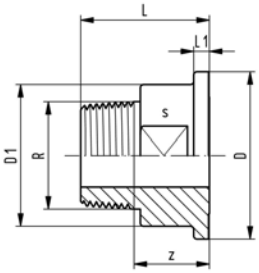

Valve end 546 brass
With threaded spigot R

Model:

- Connection to metal threads

Inch	Code	kg	D [mm]	D1 [mm]	D2 [mm]	z [mm]	L [mm]	L1 [mm]	s [mm]
½	**161 486 640**	0.160	38	32	13	23	36	4	30
¾	**161 486 641**	0.220	44	38	16	22	36	5	36
1	**161 486 642**	0.350	53	45	20	24	41	5	41

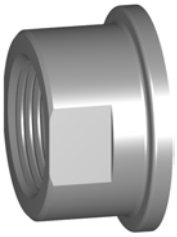

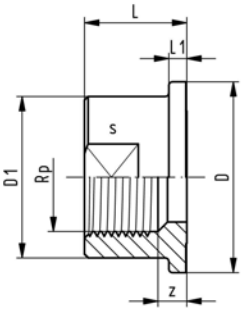

Valve end 546 brass
With threaded socket Rp

Model:

- Connection to metal threads

Inch	Code	kg	D [mm]	D1 [mm]	D2 [mm]	z [mm]	L [mm]	L1 [mm]	s [mm]
½	**161 486 651**	0.100	38	32	15	5	20	4	30
¾	**161 486 652**	0.160	44	38	20	8	25	5	36
1	**161 486 653**	0.250	53	45	25	10	29	5	41

Union nuts

Union nut 546 PVC-U

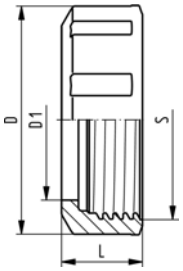

d [mm]	DN [mm]	Code	kg	D [mm]	D1 [mm]	L [mm]	S [mm]
16-20	10-15	**161 490 538**	0.019	50	34	19	42
25	20	**161 490 539**	0.026	58	39	20	48
32	25	**161 490 540**	0.041	68	47	24	58
40	32	**161 490 541**	0.077	84	57	27	71
50	40	**161 490 542**	0.111	97	65	30	84
63	50	**161 490 543**	0.191	124	79	36	106
75	65	**161 490 544**	0.562	166	94	48	135
90	80	**161 490 545**	0.882	200	113	54	135
110	100	**161 490 546**	1.355	238	137	60	198

Union nut 546 PVC-C

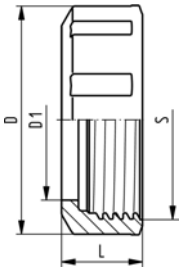

d [mm]	DN [mm]	Code	kg	D [mm]	D1 [mm]	L [mm]	S [mm]
16-20	10-15	**163 481 226**	0.013	50	34	19	42
25	20	**163 481 227**	0.019	58	39	20	48
32	25	**163 481 228**	0.028	68	47	24	58
40	32	**163 481 229**	0.054	84	57	27	71
50	40	**163 481 230**	0.072	97	65	30	84
63	50	**163 481 231**	0.225	124	79	36	106
75	65	**163 481 232**	0.619	166	94	48	135
90	80	**163 481 233**	0.973	200	113	54	135
110	100	**163 481 234**	1.493	238	137	60	198

Union nut 546 ABS

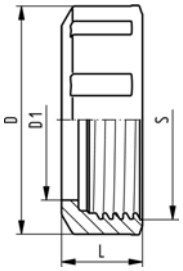

d [mm]	DN [mm]	Code	kg	D [mm]	D1 [mm]	L [mm]	S [mm]
16-20	10-15	**169 480 713**	0.014	50	34	19	42
25	20	**169 480 714**	0.019	58	39	20	48
32	25	**169 480 715**	0.030	68	47	24	58
40	32	**169 480 716**	0.056	84	57	27	71
50	40	**169 480 717**	0.081	97	65	30	84
63	50	**169 480 718**	0.139	124	79	36	106
75	65	**169 480 719**	0.435	166	94	48	135
90	80	**169 480 720**	0.683	200	113	54	135
110	100	**169 480 721**	1.048	238	137	60	198

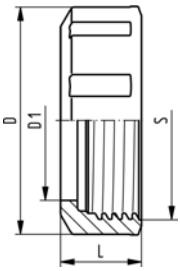

Union nut 546 PP-H

d [mm]	DN [mm]	Code	kg	D [mm]	D1 [mm]	L [mm]	S [mm]
16-20	10-15	**167 482 712**	0.012	50	34	19	42
25	20	**167 482 713**	0.018	58	39	20	48
32	25	**167 482 714**	0.027	68	47	24	58
40	32	**167 482 715**	0.052	84	57	27	71
50	40	**167 482 716**	0.069	97	65	30	84
63	50	**167 482 717**	0.135	124	79	36	106
75	65	**167 482 718**	0.463	166	94	48	135
90	80	**167 482 719**	0.728	200	113	54	135
110	100	**167 482 720**	1.117	238	137	60	198

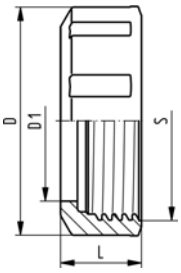

Union nut 546 PVDF

d [mm]	DN [mm]	Code	kg	D [mm]	D1 [mm]	L [mm]	S [mm]
16-20	10-15	**175 482 937**	0.024	50	34	19	42
25	20	**175 482 938**	0.033	58	39	20	48
32	25	**175 482 939**	0.053	68	47	24	58
40	32	**175 482 940**	0.099	84	57	27	71
50	40	**175 482 941**	0.142	94	65	30	84
63	50	**175 482 942**	0.245	120	79	36	106

Multifunctional modules, handle and handle extensions

DN10/15 - 50

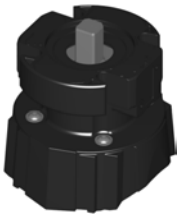

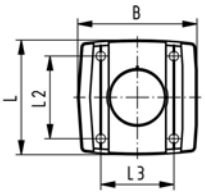

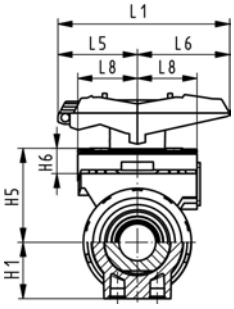

Multifunctional module (I02) PP-GF
Module empty

Model:

- Accessory to Ball Valve Type 546
- Multifunctional module acts as an intermediate element for actuators
- Including screws to mount the module and stainless steel coupling piece (V2A) for dimension DN65-100

d-d [mm]	DN-DN [mm]	Code	kg
16 - 20	10 - 15	**167 482 680**	0.055
25 - 32	20 - 25	**167 482 681**	0.070
40 - 50	32 - 40	**167 482 682**	0.080
- 63	- 50	**167 482 683**	0.120
75 - 90	65 - 50	**167 482 684**	0.397
- 110	- 100	**167 482 685**	0.425

d-d [mm]	B [mm]	H1 [mm]	H5 [mm]	H6 [mm]	L [mm]	L1 [mm]	L2 [mm]	L3 [mm]	L5 [mm]	L6 [mm]	L8 [mm]
16 - 20	67	27	50	17	72	87	54	40	42	45	34
25 - 32	75	30	53	16	72	108	52	46	50	58	38
40 - 50	81	44	72	16	80	140	60	50	66	75	41
- 63	91	64	94	19	93	165	68	65	78	87	46
75 - 90											
- 110											

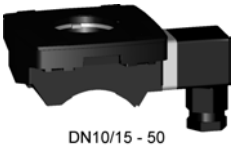

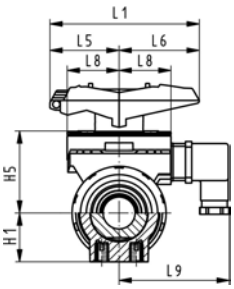

Multifunctional module (I03) PP-GF
With mechanical limit switches Ag Ni

Model:

- Accessory to Ball Valve Type 546
- Multifunctional module acts as an intermediate element for actuators
- Including Plug 3P+E / Protection: IP65
- Including screws to mount the module and stainless steel coupling piece (V2A) for dimension DN65-100

d-d [mm]	DN-DN [mm]	Code	kg	H1 [mm]	H5 [mm]	L1 [mm]	L5 [mm]	L6 [mm]	L8 [mm]	L9 [mm]
16 - 20	10 - 15	**167 482 626**	0.110	27	50	87	42	45	34	73
25 - 32	20 - 25	**167 482 627**	0.120	30	53	108	50	58	38	77
40 - 50	32 - 40	**167 482 628**	0.135	44	72	140	66	75	41	80
- 63	- 50	**167 482 629**	0.175	64	94	165	78	87	46	85
75 - 90	65 - 80	**167 482 630**	0.460							
- 110	- 100	**167 482 631**	0.480							

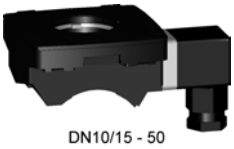

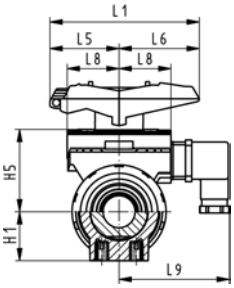

Multifunctional module (I04) PP-GF
With mechanical limit switches Au

Model:

- Accessory to Ball Valve Type 546
- Multifunctional module acts as an intermediate element for actuators
- Including Plug 3P+E / Protection: IP65
- Including screws to mount the module and stainless steel coupling piece (V2A) for dimension DN65-100

d-d [mm]	DN-DN [mm]	Code	kg	H1 [mm]	H5 [mm]	L1 [mm]	L5 [mm]	L6 [mm]	L8 [mm]	L9 [mm]
16 - 20	10 - 15	**167 482 635**	0.110	27	50	87	42	45	34	73
25 - 32	20 - 25	**167 482 636**	0.120	30	53	108	50	58	38	77
40 - 50	32 - 40	**167 482 637**	0.135	44	72	140	66	75	41	80
- 63	- 50	**167 482 638**	0.175	64	94	165	78	87	46	85
75 - 90	65 - 80	**167 482 639**	0.460							
- 110	- 100	**167 482 640**	0.480							

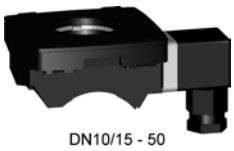

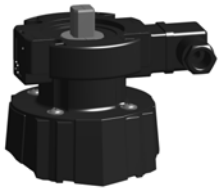

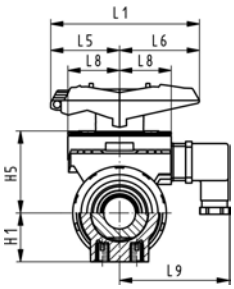

Multifunctional module (I05) PP-GF
With inductive limit switches Namur

Model:

- Accessory to Ball Valve Type 546
- Multifunctional module acts as an intermediate element for actuators
- Including Plug 3P+E / Protection: IP65
- Including screws to mount the module and stainless steel coupling piece (V2A) for dimension DN65-100

d-d [mm]	DN-DN [mm]	Code	kg	H1 [mm]	H5 [mm]	L1 [mm]	L5 [mm]	L6 [mm]	L8 [mm]	L9 [mm]
16 - 20	10 - 15	**167 482 671**	0.110	27	50	87	42	45	34	73
25 - 32	20 - 25	**167 482 672**	0.120	30	53	108	50	58	38	77
40 - 50	32 - 40	**167 482 673**	0.135	44	72	140	66	75	41	80
- 63	- 50	**167 482 674**	0.175	64	94	165	78	87	46	85
75 - 90	65 - 80	**167 482 675**	0.460							
- 110	- 100	**167 482 676**	0.480							

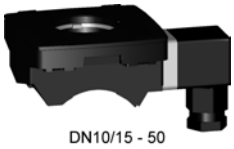

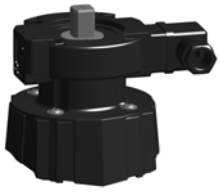

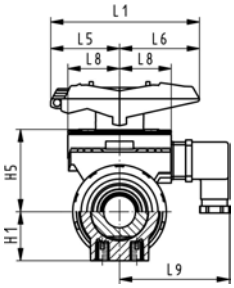

Multifunctional module (I06) PP-GF
With inductive limit switches PNP

Model:

- Accessory to Ball Valve Type 546
- Multifunctional module acts as an intermediate element for actuators
- Including Plug 3P+E / Protection: IP65
- Including screws to mount the module and stainless steel coupling piece (V2A) for dimension DN65-100

d-d [mm]	DN-DN [mm]	Code	kg	H1 [mm]	H5 [mm]	L1 [mm]	L5 [mm]	L6 [mm]	L8 [mm]	L9 [mm]
16 - 20	10 - 15	**167 482 662**	0.110	27	50	87	42	45	34	73
25 - 32	20 - 25	**167 482 663**	0.120	30	53	108	50	58	38	77
40 - 50	32 - 40	**167 482 664**	0.135	44	72	140	66	75	41	80
- 63	- 50	**167 482 665**	0.175	64	94	165	78	87	46	85
75 - 90	65 - 80	**167 482 666**	0.460							
- 110	- 100	**167 482 667**	0.480							

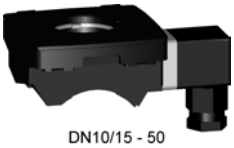

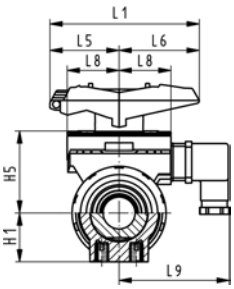

Multifunctional module (I07) PP-GF
With inductive limit switches NPN

Model:

- Accessory to Ball Valve Type 546
- Multifunctional module acts as an intermediate element for actuators
- Including Plug 3P+E / Protection: IP65
- Including screws to mount the module and stainless steel coupling piece (V2A) for dimension DN65-100

d-d [mm]	DN-DN [mm]	Code	kg	H1 [mm]	H5 [mm]	L1 [mm]	L5 [mm]	L6 [mm]	L8 [mm]	L9 [mm]
16 - 20	10 - 15	**167 482 653**	0.110	27	50	87	42	45	34	73
25 - 32	20 - 25	**167 482 654**	0.120	30	53	108	50	58	38	77
40 - 50	32 - 40	**167 482 655**	0.135	44	72	140	66	75	41	80
- 63	- 50	**167 482 656**	0.175	64	94	165	78	87	46	85
75 - 90	65 - 80	**167 482 657**	0.460							
- 110	- 100	**167 482 658**	0.480							

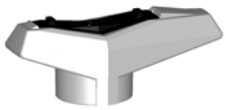

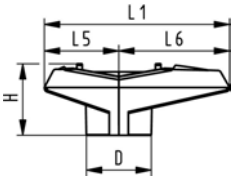

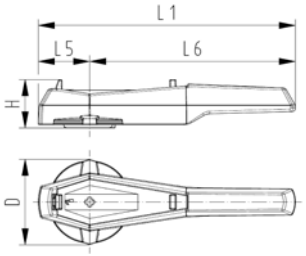

Standard handle 546 red (K01)

d [mm]	DN [mm]	Code	kg	L1 [mm]	L5 [mm]	L6 [mm]	H [mm]	D [mm]
16-20	10-15	**167 484 088**	0.012	77	32	45	31	26
25	20	**167 484 089**	0.022	97	39	58	37	34
32	25	**167 484 090**	0.022	97	39	58	37	34
40	32	**167 484 091**	0.042	128	54	74	46	40
50	40	**167 484 092**	0.042	128	54	74	46	40
63	50	**167 484 093**	0.059	152	66	87	54	44
75	65	**167 484 094**	0.250	270	64	206	58	106
90	80	**167 484 095**	0.250	270	64	206	58	106
100	100	**167 484 096**	0.298	320	64	256	60	106

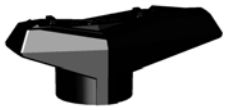

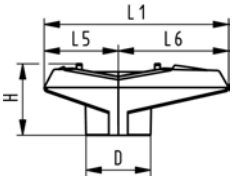

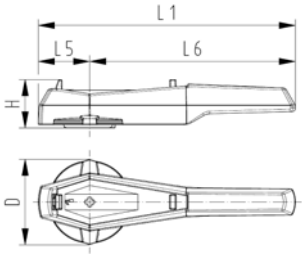

Standard handle 546 black (K02)

d [mm]	DN [mm]	Code	kg	L1 [mm]	L5 [mm]	L6 [mm]	H [mm]	D [mm]
16-20	10-15	**167 484 076**	0.012	77	32	45	31	26
25	20	**167 484 077**	0.022	97	39	58	37	34
32	25	**167 484 078**	0.022	97	39	58	37	34
40	32	**167 484 079**	0.042	128	54	74	46	40
50	40	**167 484 080**	0.042	128	54	74	46	40
63	50	**167 484 081**	0.059	152	66	87	54	44
75	65	**167 484 082**	0.250	270	64	206	58	106
90	80	**167 484 083**	0.250	270	64	206	58	106
110	100	**167 484 084**	0.298	320	64	256	60	106

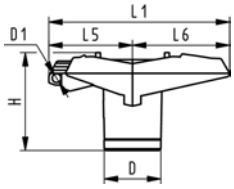

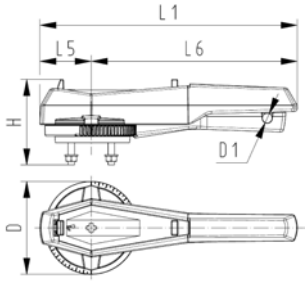

Multifunctional handle 546 red (K11)
With ratchet settings lockable

Note:

- To retrofit the ball valve 546 with the multifunctional handle a multifunction module is neccessary in the dimensions DN65-100

d-d [mm]	DN-DN [mm]	Code	kg	D [mm]	D1 [mm]	H [mm]	L1 [mm]	L5 [mm]	L6 [mm]
16 - 20	10 - 15	**167 484 100**	0.026	26	5	53	87	42	45
- 25	- 20	**167 484 101**	0.045	34	5	59	108	50	58
- 32	- 25	**167 484 102**	0.045	34	5	59	108	50	58
- 40	- 32	**167 484 103**	0.082	40	5	69	140	66	75
- 50	- 40	**167 484 104**	0.082	40	5	69	140	66	75
- 63	- 50	**167 484 105**	0.104	44	5	80	165	78	87
- 75	- 65	**161 486 689**	0.480	115	12	105	270	64	206
- 90	- 80	**161 486 690**	0.480	115	12	105	270	64	206
110 - 140	100 - 125	**161 486 691**	0.480	115	12	107	320	64	256

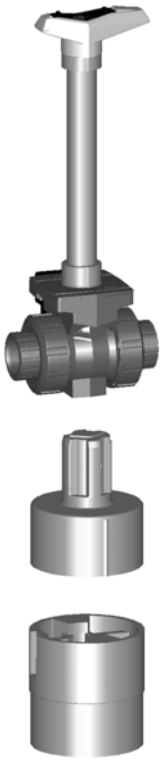

Handle extension 546 PVC-U metric

Model:

- For Ball Valve Type 546
- Composed of adapter sockets for handle connection and stem connection
- PVC-U pipe in suitable length has to be obtained on site

d-d [mm]	DN-DN [mm]	Code	kg	H [mm]	H1 [mm]	H2 [mm]	H3 [mm]	D [mm]
16 - 20	10 - 15	**161 486 435**	0.032	41	52	29	36	26
25 - 32	20 - 25	**161 486 436**	0.037	50	62	32	39	36
40 - 50	32 - 40	**161 486 437**	0.047	65	76	34	44	40
- 63	- 50	**161 486 438**	0.058	84	87	37	48	44

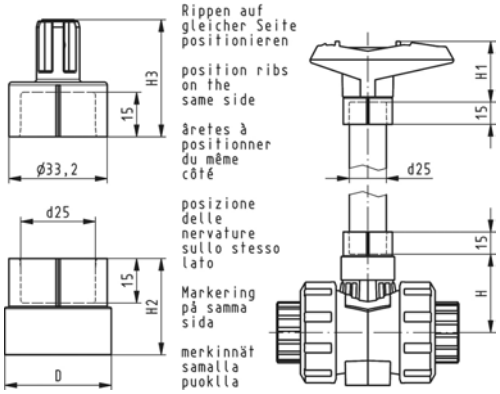

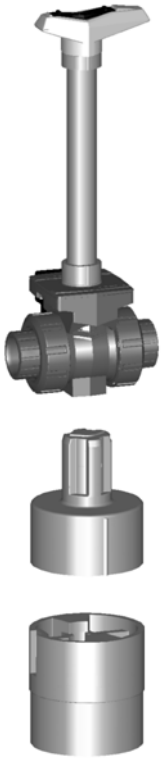

Handle extension 546 PVC-U inch BS/ASTM

- For Ball Valve Type 546

DN-DN [mm]	Inch	Code	kg	H [mm]	H1 [mm]	H2 [mm]	H3 [mm]	D [mm]
10 - 15	3/8-1/2	**161 486 443**	0.032	41	52	29	36	26
20 - 25	3/4-1	**161 486 444**	0.037	50	62	32	39	36
32 - 40	1 1/4-1 1/2	**161 486 445**	0.047	65	76	34	44	40
50 -	2	**161 486 446**	0.058	84	87	37	48	44

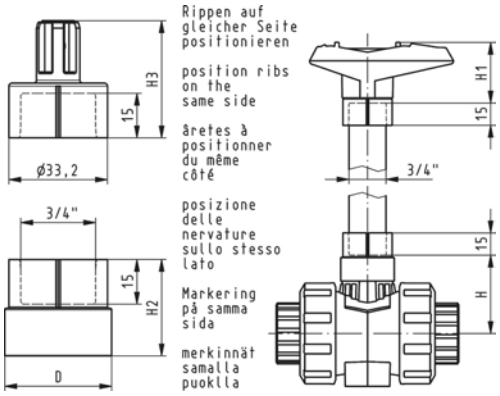

Mounting plates

Mounting plate 546 PP-GF (L02)

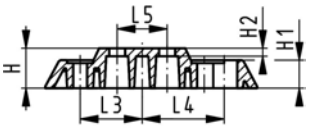

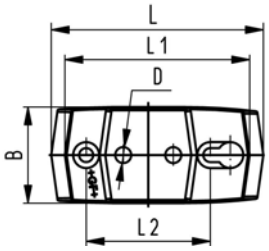

- 2 mounting screws inclusive

d-d [mm]	DN-DN [mm]	Code	kg
16 - 32	10 - 25	**167 484 110**	0.055
40 - 63	32 - 50	**167 484 111**	0.086

d-d [mm]	B [mm]	D [mm]	H [mm]	H1 [mm]	H2 [mm]	L [mm]	L1 [mm]	L2 [mm]	L3 [mm]	L4 [mm]	L5 [mm]
16 - 32	48	8	20	14	4	106	92	62	31	41	25
40 - 63	54	9	20	14	4	149	134	104	52	62	45

Pipe Clips metric

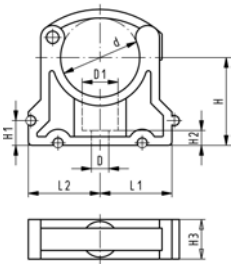

KLIP-IT Pipe Clips Type 061H, PP metric

Model:

- For mm-pipes d16-d63
- Material: PP black, UV resistant
- **Minimum order quantity: standard packagings SP**

- Height designed for Ball Valve Type 546
- * d16 to d32 without bracket

d [mm]	Code	kg	D [mm]	D1 [mm]	L1 [mm]	L2 [mm]	H [mm]	H1 [mm]	H2 [mm]	H3 [mm]	SC
*16	**167 061 035**	0.006	6	11	14	17	27	10	6	16	M5
*20	**167 061 036**	0.008	6	11	17	19	27	10	6	16	M5
*25	**167 061 037**	0.009	6	11	19	22	30	10	6	16	M5
*32	**167 061 038**	0.012	6	11	24	27	36	10	6	16	M5
40	**167 061 039**	0.027	7	14	34	34	44	10	7	22	M6
50	**167 061 040**	0.031	7	14	37	37	51	10	7	22	M6
63	**167 061 041**	0.054	9	17	45	45	64	10	10	25	M8

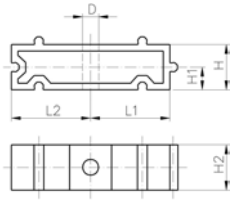

KLIP-IT Spacer Type 061, PP

Model:

- For pipe clips Type 061/061H, PP black, UV resistant
- **Minimum order quantity: standard packaging SP**

d [mm]	Inch	Code	kg	D [mm]	L1 [mm]	L2 [mm]	H [mm]	H1 [mm]	H2 [mm]	SC
16	3/8	**167 061 155**	0.006	6	14	17	20	10	16	M5
20	1/2	**167 061 156**	0.006	6	17	19	20	10	16	M5
25	3/4	**167 061 157**	0.007	6	19	22	20	10	16	M5
32	1	**167 061 158**	0.008	6	24	27	20	10	16	M5
40	1 1/4	**167 061 159**	0.016	7	34	34	20	10	22	M6
50	1 1/2	**167 061 160**	0.017	7	37	37	20	10	22	M6
63	2	**167 061 161**	0.024	9	45	45	20	10	25	M8

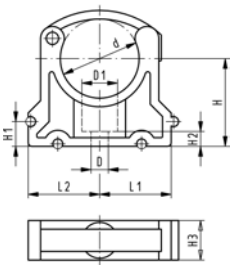

KLIP-IT Pipe Clips Type 061H, PP BS/ASTM

Model:

- Material: PP black, UV resistant
- **Minimum order quantity: standard packaging SP**

- Height designed for Ball Valve Type 546
- For Inch-pipes 3/8-2

Inch	Code	kg	D [mm]	D1 [mm]	L1 [mm]	L2 [mm]	H [mm]	H1 [mm]	H2 [mm]	H3 [mm]	SC
1/4	**167 061 054**	0.003	5	8	11	14	21	10	6	12	M5
3/8	**167 061 085**	0.006	6	10	14	17	27	10	6	16	M5
1/2	**167 061 086**	0.008	6	10	17	19	27	10	6	16	M5
3/4	**167 061 087**	0.009	6	10	19	22	30	10	6	16	M5
1	**167 061 088**	0.012	6	10	24	27	36	10	6	16	M5
11/4	**167 061 089**	0.027	7	14	34	34	44	10	7	22	M6
11/2	**167 061 090**	0.031	7	14	37	37	51	10	7	22	M6
2	**167 061 091**	0.054	9	17	45	45	64	10	10	25	M8
21/2	**167 061 112**	0.062	9	17	52	52	58	10	10	25	M8
	167 061 013	0.090	9		65	65	65	10	10	28	M8
4	**167 061 114**	0.114	9	17	79	79	81	10	10	28	M8
	167 061 016	0.217	9		98	98	110	10	10	32	M8

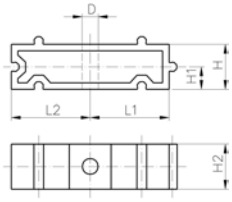

KLIP-IT Spacer Type 061, PP

Model:

- For pipe clips Type 061/061H, PP black, UV resistant
- **Minimum order quantity: standard packaging SP**

d [mm]	Inch	Code	kg	D [mm]	L1 [mm]	L2 [mm]	H [mm]	H1 [mm]	H2 [mm]	SC
16	3/8	**167 061 155**	0.006	6	14	17	20	10	16	M5
20	1/2	**167 061 156**	0.006	6	17	19	20	10	16	M5
25	3/4	**167 061 157**	0.007	6	19	22	20	10	16	M5
32	1	**167 061 158**	0.008	6	24	27	20	10	16	M5
40	1 1/4	**167 061 159**	0.016	7	34	34	20	10	22	M6
50	1 1/2	**167 061 160**	0.017	7	37	37	20	10	22	M6
63	2	**167 061 161**	0.024	9	45	45	20	10	25	M8

Assembly parts for ball valves

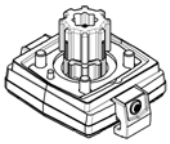

Adapter plate incl. coupling
For actuator units electric type EA 11/ EA 21
Pneumatic type PA 11 / PA 21
To type 546

d-d [mm]	DN-DN [mm]	Code	kg
16 - 20	10 - 15	**198 150 556**	0.098
25 - 32	20 - 25	**198 150 557**	0.114
40 - 50	32 - 40	**198 150 558**	0.154
- 63	- 50	**198 150 559**	0.184

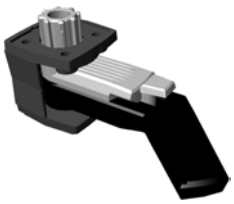

Intermediate element to type 107 - 130 / 230
with manual override

DN-DN [mm]	Code	kg
10 - 25	**198 000 500**	0.240
32 - 50	**198 000 501**	0.260

Intermediate element
(coupling/screws/distance pieces/reducing bush)
For actuator units pneumatic PA30-45
To type 546

d	DN	Type	Code
75	65	PA30 FC/FO	198 000 595
75	65	PA35 DA	198 000 595
90	80	PA35 FC/FO	198 000 596
90	80	PA40 DA	198 000 595
110	100	PA40 FC/FO	198 000 599
110	100	PA45 DA	198 000 599

Code	kg
198 000 595	0.300
198 000 596	0.300
198 000 599	0.100

Adapter set
(screws/distance pieces/reducing bush)
For actuator unit EA31
To type 546

d-d	DN-DN	Code
75-90	65-80	198 000 601
110	100	198 000 602

Code	kg
198 000 601	0.150
198 000 602	0.150

Assembly parts for actuators

Adapter set for PA11
F04 (WS11) per EN ISO 5211

Code	kg	
198 000 586	0.006	

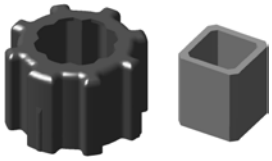

Adapter set for PA21 EA11 EA21
F05 (WS11/14) per EN ISO 5211

Code	kg	
198 000 587	0.018	

Electric actuators

Electric actuator type EA 11

Note:

- F05 (WS11/14) per EN ISO 5211 with adapter 198.000.587

Voltage	Code	kg	
100-230 V~	**198 150 180**	1.500	
24 V=/ ~	**198 150 181**	1.500	

Electric actuator type EA 21

Note:

- F05 (WS11/14) per EN ISO 5211 with adapter 198.000.587

Voltage	Code	kg	
100-230 V~	**198 150 182**	1.750	
24 V=/ ~	**198 150 183**	1.750	

Electric actuator type EA 31

New

Note:

- F07 (WS 17) per EN ISO 5211

Voltage	Code	kg	
100-230 V~	**198 150 184**	2.150	
24 V=/ ~	**198 150 185**	2.150	

Accessories for electric actuators

For electric actuators
Type EA 11/ EA 21/ EA 31/ EA 42
Heating element

Voltage	Code	kg	
24 V=	**199 190 086**	0.200	

For electric actuators
Type EA 11/ EA 21/ EA 31/ EA 42
Fail safe return incl. battery kit

Voltage	Code	kg	
24 V=	**199 190 085**	0.885	

For electric actuators
Type EA 11/ EA 21/ EA 31/ EA 42
Heating element + fail safe return incl. battery kit

Voltage	Code	kg	
24 V=	**199 190 087**	0.200	

For electric actuators
Type EA 11/ EA 21/ EA 31/ EA 42
Battery kit (spare)

Voltage	Code	kg	
24 V=	**198 151 317**	0.250	

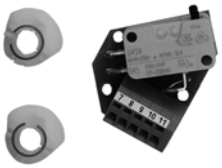

For electric actuators
Type EA 11/ EA 21/ EA 31/ EA 42
Limit switch kit with mechanical limit switches AgNi

Voltage	Code	kg	
250 V ~6 A	**199 190 092**	0.200	

For electric actuators
Type EA 21/ EA 31/ EA 42
Testing adapter kit

Code	kg	
198 151 426	0.100	

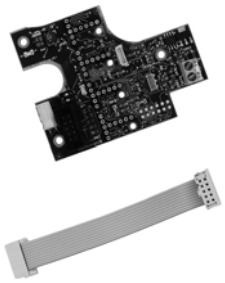

For electric actuators
Type EA 21/ EA 31/ EA 42
Monitoring print

Code	kg	
199 190 099	0.020	

For electric actuators
Type EA 21/ EA 31/ EA 42
Cycle time extension

Model:

- Monitoring print required

Code	kg	
199 190 080	0.020	

For electric actuators
Type EA 21/ EA 31/ EA 42
Cycle time monitoring

Model:

- Monitoring print required

Code	kg	
199 190 082	0.020	

For electric actuators
Type EA 21/ EA 31/ EA 42
Cycle counter

Model:

- Monitoring print required

Code	kg	
199 190 083	0.020	

For electric actuators
Type EA 21/ EA 31/ EA 42
Motor current monitoring

Model:

- Monitoring print required

Code	kg	
199 190 081	0.020	

For electric actuators
Type EA 21/ EA 31/ EA 42
Position signalization

Model:

- Must be used with either the PE25 positioner or the monitoring print

Code	kg	
199 190 084	0.020	

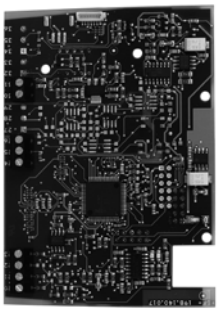

For electric actuators
Type EA 21/ EA 31/ EA 42
Positioner PE25

Model:

- Positioner must use position signalization

** galvanic isolated set value inputs
* not galvanic isolated set value inputs

Voltage	Code	kg	
*24 V=	**199 190 100**	0.200	
**24 V=	**199 190 101**	0.200	

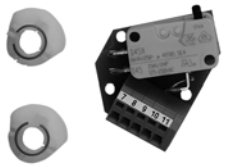

For electric actuators
Type EA 21/ EA 31/ EA 42
Limit switch kit with gold contacts Au

Voltage	Code	kg	
30 V=, 100mA	**199 190 093**	0.200	

For electric actuators
Type EA 21/ EA 31/ EA 42
Limit switch kit with inductive switches PNP

Voltage	Code	kg	
5-30 V= 0,1 A	**199 190 095**	0.200	

For electric actuators
Type EA 21/ EA 31/ EA 42
Limit switch kit with inductive switches NPN

Voltage	Code	kg	
5-30 V= 0,1 A	**199 190 096**	0.200	

For electric actuators
Type EA 21/ EA 31/ EA 42
Assembly kit for 4 limit switches

Voltage	Code	kg	
5-30 V= 0,1 A	**199 190 097**	0.200	

For electric actuators
Type EA 21/ EA 31/ EA 42
Limit switch kit with mechanical limit switches
Middle position

Voltage	Code	kg	
4-30 V= 1-100 mA	**199 190 094**	0.200	

Pneumatic rotary actuators PA

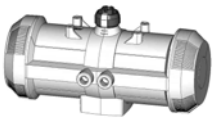

Pneumatic actuator type PA 11 / PA 21
Fail safe to close (FC)

Type	DN-DN [mm]	Code	kg
PA 11 FC	10 - 25	**198 150 127**	0.743
PA 21 FC	32 - 50	**198 150 130**	1.419

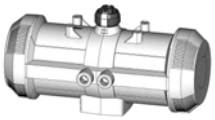

Pneumatic actuator type PA 11 / PA 21
Fail safe to open (FO)

Type	DN-DN [mm]	Code	kg
PA 11 FO	10 - 25	**198 150 128**	0.743
PA 21 FO	32 - 50	**198 150 131**	1.419

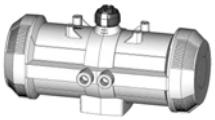

Pneumatic actuator type PA 11 / PA 21
Double action (DA)

Type	DN-DN [mm]	Code	kg
PA 11 DA	10 - 25	**198 150 129**	0.553
PA 21 DA	32 - 50	**198 150 132**	0.995

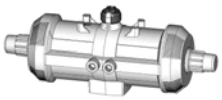

Pneumatic actuator type PA 11 / PA 21
Fail safe to close (FC) with stroke limiter

Type	DN-DN [mm]	Code	kg
PA 11 FC	10 - 25	**198 150 144**	0.837
PA 21 FC	32 - 50	**198 150 147**	1.609

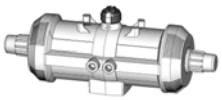

Pneumatic actuator type PA 11 / PA 21
Fail safe to open (FO) with stroke limiter

Type	DN-DN [mm]	Code	kg
PA 11 FO	10 - 25	**198 150 145**	0.837
PA 21 FO	32 - 50	**198 150 148**	1.609

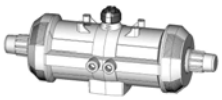

Pneumatic actuator type PA 11 / PA 21
Double action (DA) with stroke limiter

Type	DN-DN [mm]	Code	kg
PA 11 DA	10 - 25	**198 150 146**	0.647
PA 21 DA	32 - 50	**198 150 149**	1.185

Pneumatic actuator type PA 30 PA 90
Fail safe to close / Fail safe to open (FC/FO)

* Only for butterfly valve type 240, 241, 242

Type	hard anodized Code	nickel plated Code	hard anodized with stroke limiter Code
PA 30 FC/FO	**198 800 757**	**198 800 034**	**-**
*PA 30 FO	**198 811 025**	**-**	**-**
PA 35 FC/FO	**198 800 037**	**198 800 052**	**-**
*PA 35 FO	**198 811 026**	**-**	**-**
PA 40 FC/FO	**198 800 728**	**198 800 004**	**198 800 017**
*PA 40 FO	**198 811 027**	**-**	**-**
PA 45 FC/FO	**198 800 039**	**198 800 054**	**-**
*PA45 FO	**198 811 028**	**-**	**-**
PA 50 FC/FO	**198 800 729**	**198 800 005**	**198 800 018**
*PA50 FO	**198 811 029**	**-**	**-**
PA 55 FC/FO	**198 800 041**	**198 800 056**	**-**
*PA 55 FO	**198 811 030**	**-**	**-**
PA 60 FC/FO	**198 800 730**	**198 800 006**	**198 800 019**
PA 65 FC/FO	**198 800 043**	**198 800 058**	**-**
PA 70 FC/FO	**198 800 731**	**198 800 007**	**198 800 020**
PA 75 FC/FO	**198 800 045**	**198 800 060**	**-**
PA 80 FC/FO	**198 800 047**	**198 800 062**	**-**

Type		D1 [mm]	D2 [mm]	D3[M] [mm]	D4 [inch]	D5 [mm]	L [mm]	L2 [mm]	L3 [mm]	L4 [mm]	L5 [mm]	H [mm]
PA 30 FC/FO	F04	42	30	M5x9	⅛	10	276	11	35	70	32	102
*PA 30 FO	F04	42	30	M5x9	⅛	10	276	11	35	70	32	102
PA 35 FC/FO	F05	50	35	M6x11	⅛	12	326	14	35	70	32	111
*PA 35 FO	F05	50	35	M6x11	⅛	12	326	14	35	70	32	111
PA 40 FC/FO	F05	50	35	M6x11	⅛	12	370	14	35	70	32	129
*PA 40 FO	F05	50	35	M6x11	⅛	12	370	14	35	70	32	129
PA 45 FC/FO	F07	70	55	M8x15	⅛	15	411	17	35	70	32	139
*PA45 FO	F07	70	55	M8x15	⅛	15	411	17	35	70	32	139
PA 50 FC/FO	F07	70	55	M8x15	⅛	15	423	17	35	70	32	149
*PA50 FO	F07	70	55	M8x15	⅛	15	423	17	35	70	32	149
PA 55 FC/FO	F10	102	70	M10x17	⅛	19	452	22	35	70	32	161
*PA 55 FO	F10	102	70	M10x17	⅛	19	452	22	35	70	32	161
PA 60 FC/FO	F10	102	70	M10x17	⅛	19	503	22	35	70	32	173
PA 65 FC/FO	F12	125	85	M12x21	¼		648	27			32	191
PA 70 FC/FO	F12	125	85	M12x21	¼		663	27			32	196
PA 75 FC/FO	F14	140	100	M16x25	¼		824	36			32	229
PA 80 FC/FO	F14	140	100	M16x25	¼		918	36			32	241

Type	H1 [mm]	H2 [mm]	H3 [mm]	H4 [mm]	H5 [mm]	H6 [mm]	H7 [mm]	H8 [mm]
PA 30 FC/FO	70	21	18	65	13	20	36	
*PA 30 FO	70	21	18	65	13	20	36	
PA 35 FC/FO	78	21	18	72	13	20	36	
*PA 35 FO	78	21	18	72	13	20	36	
PA 40 FC/FO	86	25	21	80	13	30	36	
*PA 40 FO	86	25	21	80	13	30	36	
PA 45 FC/FO	96	25	21	90	16	30	36	
*PA45 FO	96	25	21	90	16	30	36	
PA 50 FC/FO	106	25	26	100	17	30	36	
*PA50 FO	106	25	26	100	17	30	36	
PA 55 FC/FO	118	25	25	112	19	30	36	
*PA 55 FO	118	25	25	112	19	30	36	
PA 60 FC/FO	130	25	32	124	19	30	36	
PA 65 FC/FO	148	24	34	137				22
PA 70 FC/FO	153	24	38	145				24
PA 75 FC/FO	186	24	43	166				27
PA 80 FC/FO	198	24	44	180				32

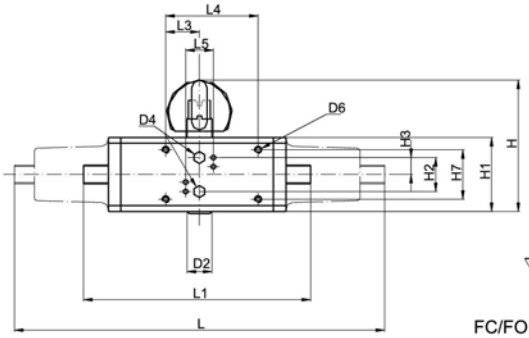

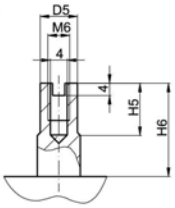

FC/FO: PA 30/35/40/45
PA 50/55/60

DA: PA 30/35/40/45
PA 50/55/60/65/70

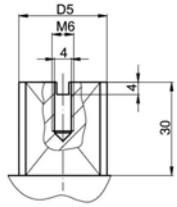

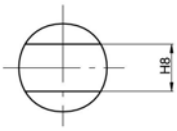

FC/FO: PA 65/70/75/80
DA: PA 75/80/85/90

Pneumatic actuator type PA 30 PA 90
Double acting (DA)

Other versions on request

Type	hard anodized Code	kg
PA 30 DA	**198 800 737**	2.400
PA 35 DA	**198 800 758**	1.250
PA 40 DA	**198 800 732**	1.731
PA 45 DA	**198 800 040**	1.850
PA 50 DA	**198 800 733**	2.984
PA 55 DA	**198 800 042**	3.400
PA 60 DA	**198 800 734**	6.040
PA 65 DA	**198 800 044**	7.200
PA 70 DA	**198 800 735**	10.300
PA 75 DA	**198 800 046**	12.000
PA 80 DA	**198 800 048**	14.000
PA 85 DA	**198 800 050**	19.700
PA 90 DA	**198 800 051**	25.400

Type		D1 [mm]	D2 [mm]	D3[M] [mm]	D4 [inch]	D5 [mm]	L1 [mm]	L2 [mm]	L3 [mm]	L4 [mm]	L5 [mm]	H [mm]	H1 [mm]
PA 30 DA	F03	36	25	M5x9	⅛	9	177	9	35	70		92	60
PA 35 DA	F04	42	30	M5x9	⅛	10	190	11	35	70		98	66
PA 40 DA	F04	42	30	M5x9	⅛	10	198	11	35	70		102	70
PA 45 DA	F05	50	35	M6x11	⅛	12	235	14	35	70		111	78
PA 50 DA	F05	50	35	M6x11	⅛	12	250	14	35	70		129	86
PA 55 DA	F07	70	55	M8x15	⅛	15	279	17	35	70		139	96
PA 60 DA	F07	70	55	M8x15	⅛	15	341	17	35	70		149	106
PA 65 DA	F10	102	70	M10x17	⅛	19	350	22	35	70		161	118
PA 70 DA	F10	102	70	M10x17	⅛	19	381	22	35	70		173	130
PA 75 DA	F12	125	85	M12x21	¼		416	27			32	191	148
PA 80 DA	F12	125	85	M12x21	¼		466	27			32	197	153
PA 85 DA	F14	140	100	M16x25	¼		555	36			32	229	186
PA 90 DA	F14	140	100	M16x25	¼		581	36			32	241	198

Type	H2 [mm]	H3 [mm]	H4 [mm]	H5 [mm]	H6 [mm]	H7 [mm]	H8 [mm]
PA 30 DA	25	12	55	10	20	36	
PA 35 DA	25	13	60	13	20	36	
PA 40 DA	21	18	65	13	20	36	
PA 45 DA	21	18	72	13	20	36	
PA 50 DA	25	21	80	13	30	36	
PA 55 DA	25	21	90	16	30	36	
PA 60 DA	25	26	100	17	30	36	
PA 65 DA	25	25	112	19	30	36	
PA 70 DA	25	32	124	19	30	36	
PA 75 DA	24	34	137				22
PA 80 DA	24	38	145				24
PA 85 DA	24	43	166				27
PA 90 DA	24	44	180				32

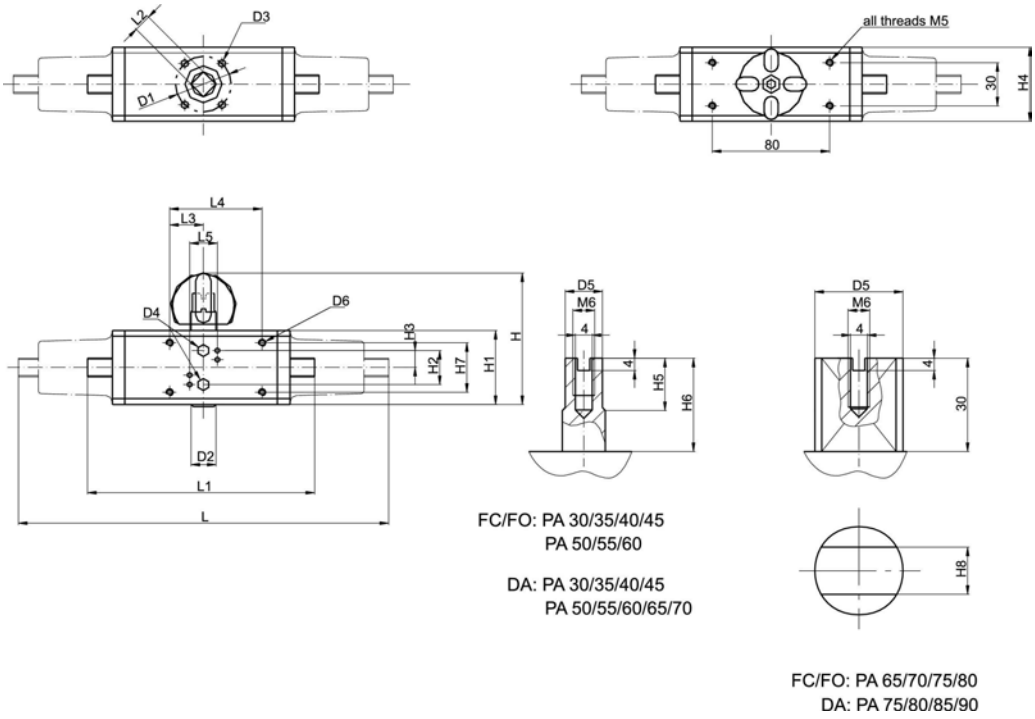
V2
D3
D1
all threads M5
30
H4
80
L4
L3
L5
D4
D6
H3
H2
H7
H1
H
D2
L1
L
D5
M6
4
4
H5
H6
FC/FO: PA 30/35/40/45
PA 50/55/60
DA: PA 30/35/40/45
PA 50/55/60/65/70
D5
M6
4
4
30
H8
FC/FO: PA 65/70/75/80
DA: PA 75/80/85/90

Accessories for pneumatic rotary actuators

For pneumatic actuators type PA 11 - PA 90
Namur connecting plate

- PA30 - PA55

Code	kg	
199 190 275	0.100	

For pneumatic actuators type PA 11 - PA 90
Namur mounting flange

No	Code	kg	
3	**199 190 281**	0.312	

Position indicator

For actuator units pneumatic type PA 11 - PA 90 Namur mounting flange

No	Code	kg	
3	**199 190 281**	0.312	

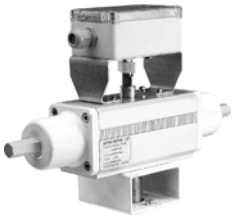

For actuator units pneumatic type PA 11 - PA 90 Limit switch box with 2 auxiliary switches

- Including namur mounting flange

Voltage	Code	kg	
250 V ~/10 A	**199 190 282**	0.530	

For actuator units pneumatic type PA 11 - PA 90 Limit switch box with 2 inductive auxiliary switches NPN with luminous diode

- Including namur mounting flange

Voltage	Code	kg	
10...30 V/ 0.1 A	**199 190 283**	0.530	

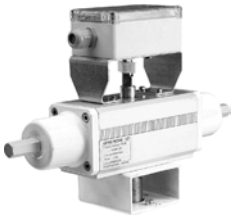

For actuator units pneumatic type PA 11 - PA 90 Limit switch box with 2 inductive auxiliary switches PNP With luminous diode

- Including namur mounting flange

Voltage	Code	kg	
10...30 V/ 0.1 A	**199 190 284**	0.530	

For actuator units pneumatic type PA 11 - PA 90 Limit switch box with 2 inductive auxiliary switches Namur Eexi (intrinsically safe)

- Including namur mounting flange

Voltage	Code	kg	
5-15 V	**199 190 285**	0.530	

For actuator units pneumatic type PA 11 - PA 90
Limit switch box with 2 auxiliary switches Eexd

- Including namur mounting flange

Voltage	Code	kg	
250 V ~/5 A	**199 190 286**	0.600	

For actuator units pneumatic type PA 11 - PA 90
Limit switch box with 2 auxiliary switches
With gold contact

- Including namur mounting flange

Voltage	Code	kg	
30 V =/ 1-100 mA	**199 190 287**	0.530	

Controllers

Electro-pneumatic positioner
Positioner type Eckardt SRI 986

- Other versions and accessories on request

No	single acting (FC/FO) Code	double acting (DA) Code	kg	
1	**199 190 348**	**199 190 349**	1.900	

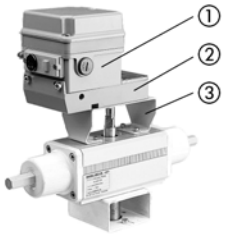

Accessories for electro-pneumatic positioner
Attachment kit for type Eckardt SRI 986

No	Typ DIASTAR DN 15-150 Code	Type PA 30 - PA 90 Code	kg	
2	**199 190 350**	**199 190 351**	0.200	

Pilot valves

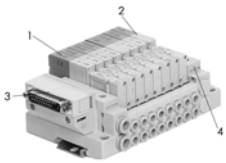

Solenoid pilot valve type PV 2000
2 x 3/2-way valve

Model:

- lockable manual override

- Version for 3/2-way and 5/2-way valves
- Electrical control over multiple and field bus connector

No	Voltage	Code	kg	
1	24V/DC 100%	**199 190 435**	0.110	

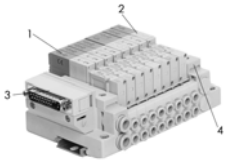

Solenoid pilot valve type PV 2000
1 x 5/2-way valve

- Version for 3/2-way and 5/2-way valves
- Electrical control over multiple and field bus connector

No	Voltage	Code	kg	
2	24 V/DC 100%	**199 190 423**	0.105	

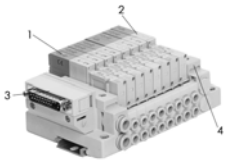

Solenoid pilot valve type PV 2000
Connection module with D-sub connector

- Version for 3/2-way and 5/2-way valves
- Electrical control over multiple and field bus connector

No	Code	kg	
3	**199 190 424**	0.156	

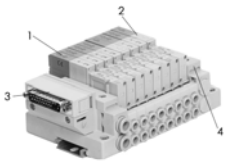

Solenoid pilot valve type PV 2000
End module

- Version for 3/2-way and 5/2-way valves
- Electrical control over multiple and field bus connector

No	Code	kg	
4	**199 190 426**	0.102	

Solenoid pilot valve type PV 2000
Connection module AS-interface

- Version for 3/2-way and 5/2-way valves
- Electrical control over multiple and field bus connector

No	Code	kg	
1	**199 190 430**	0.200	

Solenoid pilot valve type PV 2000
Connection module profibus

- Version for 3/2-way and 5/2-way valves
- Electrical control over multiple and field bus connector

No	Code	kg	
1	**199 190 431**	0.200	

Solenoid pilot valve type PV 2000
Connection module with bus interface

- Version for 3/2-way and 5/2-way valves
- Electrical control over multiple and field bus connector

No	Code	kg	
2	**199 190 425**	0.156	

Accessories to type PV 2000
Silencer 8mm

Code	kg
199 190 427	0.020

Accessories to type PV 2000
Plug (white)

d [mm]	Code	kg
8	**199 190 428**	0.010
6	**199 190 429**	0.010

Accessories to type PV 2000
D-Sub connector 25 poles
With connection cable

Cable length [m]	Code	kg
1.50	**199 190 432**	0.500
3.00	**199 190 433**	0.500
5.00	**199 190 434**	0.500

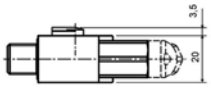

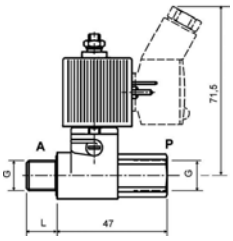

Solenoid pilot valve type PV 94
Pilot valve 3/2 ways

Model:

- For direct installation (including valve body and hollow screw)
- Port P compressed air connection G 1/8
- Port A actuator connection G 1/8
- With connector plug
- With adapter G1/8 to G1/4

- To pneumatic actuators FC/FO (single acting)
- Circuit function C: de-energized closed
- Valve material polyamid / brass

Voltage	DN [mm]	Compressed air connection P	Actuator connection	PN	kv-value (Δp=1 bar) [l/min]	NBR Code	kg
24 V=	1.2	G 1/8	G 1/8	10	48	**199 190 498**	0.135
24 V, 50-60 Hz	1.2	G 1/8	G 1/8	10	48	**199 190 499**	0.135
110 V, 50-60 Hz	1.2	G 1/8	G 1/8	10	48	**199 190 500**	0.135
230 V, 50-60 Hz	1.2	G 1/8	G 1/8	10	48	**199 190 501**	0.135

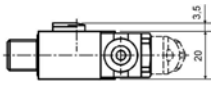

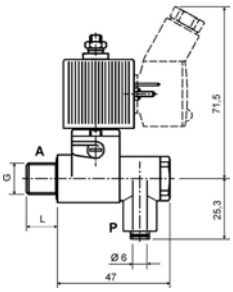

Solenoid pilot valve type PV 94
Pilot valve 3/2 ways

Model:

- For direct installation (including valve body and hollow screw)
- Port P compressed air connection tube push-in 6mm
- Port A actuator connection G 1/8
- With connector plug
- With adapter G1/8 to G1/4

- To pneumatic actuators FC/FO (single acting)
- Circuit function C: de-energized closed
- Valve material polyamid / brass

Voltage	DN [mm]	Compressed air connection P	Actuator connection	PN	kv-value (Δp=1 bar) [l/min]	NBR Code	kg
24 V=	1.2	push-in	G 1/8	10	48	**199 190 510**	0.135
24 V, 50-60 Hz	1.2	push-in	G 1/8	10	48	**199 190 511**	0.135
110 V, 50-60 Hz	1.2	push-in	G 1/8	10	48	**199 190 512**	0.135
230 V, 50-60 Hz	1.2	push-in	G 1/8	10	48	**199 190 513**	0.135

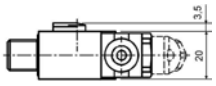

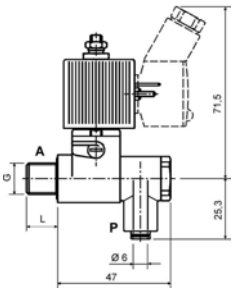

Solenoid pilot valve type PV 94
Pilot valve 3/2 ways

Model:

- For direct installation (including valve body and hollow screw)
- Port P compressed air connection NPT 1/8
- Port A actuator connection G 1/8
- With connector plug
- With adapter G1/8 to G1/4

- To pneumatic actuators FC/FO (single acting)
- Circuit function C: de-energized closed
- Valve material polyamid / brass

Voltage	DN [mm]	Com-pressed air con-nection P	Actuator connec-tion	PN	kv-value (Δp=1 bar) [l/min]	NBR Code	kg
24 V=	1.2	NPT 1/8	G 1/8	10	48	**199 190 546**	0.135
24 V AC	1.2	NPT 1/8	G 1/8	10	48	**199 190 561**	0.135
110 V, 50-60 Hz	1.2	NPT 1/8	G 1/8	10	48	**199 190 547**	0.135

Solenoid pilot valve type PV 94
Accessory

Model:

- Cable plug to DIN EN 175301-803 (DIN 43 650) form C

Voltage	Version	NBR Code	kg
0-250 V	no circuitry	**199 190 518**	0.020
0-24 V	with LED	**199 190 519**	0.020
0-24 V	with LED and varistor	**199 190 520**	0.020
0-24 V	with rectifier LED and varistor	**199 190 521**	0.020
200-240 V	with LED	**199 190 522**	0.020
200-240 V	with LED and varistor	**199 190 523**	0.020

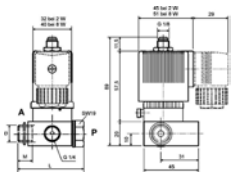

Solenoid pilot valve type PV 95
Pilot valve 3/2 ways

Model:

- For direct installation (including valve body and hollow screw)
- Port P compressed air connection G 1/4
- Port A actuator connection G 1/8
- With connector plug
- With adapter G1/8 to G1/4

- To pneumatic actuators FC/FO (single acting)
- Circuit function C: de-energized closed
- Valve material: brass
- Power consumption: 24VA at AC inrush; 17VA/8W at AC hold; 8W at DC

Voltage	DN [mm]	Compressed air connection P	Actuator connection	PN	kv-value (Δp=1 bar) [l/min]	NBR Code	kg
24 V=	2.0	G 1/4	G 1/8	10	120	**199 190 532**	0.420
24 V, 50-60 Hz	2.0	G 1/4	G 1/8	10	120	**199 190 533**	0.420
110 V, 50-60 Hz	2.0	G 1/4	G 1/8	10	120	**199 190 534**	0.420
230 V, 50-60 Hz	2.0	G 1/4	G 1/8	10	120	**199 190 535**	0.420

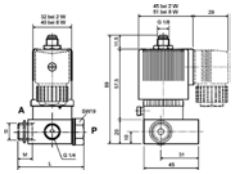

Solenoid pilot valve type PV 95
Pilot valve 3/2 ways

Model:

- For direct installation (including valve body and hollow screw)
- Port P compressed air connection NPT 1/8
- Port A actuator connection G 1/4
- With connector plug
- With adapter G1/8 to G1/4

- To pneumatic actuators FC/FO (single acting)
- Circuit function C: de-energized closed
- Valve material: brass
- Power consumption: 24VA at AC inrush; 17VA/8W at AC hold; 8W at DC

Voltage	DN [mm]	Compressed air connection P	Actuator connection	PN	kv-value (Δp=1 bar) [l/min]	NBR Code	kg
24 V=	1.5	NPT 1/8	G 1/4	10	120	**199 190 554**	0.420
110 V, 50-60 Hz	1.5	NPT 1/8	G 1/4	10	120	**199 190 555**	0.420

Solenoid pilot valve type PV 95
Accessory

Model:

- Cable plug to DIN EN 175301-803 (DIN 43 650) form A

Voltage	Version	NBR Code	kg
0-250 V	no circuitry	**199 190 540**	0.020
0-24 V	with LED	**199 190 541**	0.020
0-24 V	with LED and varistor	**199 190 542**	0.020
0-24 V	with rectifier LED and varistor	**199 190 543**	0.020
200-240 V	with LED	**199 190 544**	0.020
200-240 V	with LED and varistor	**199 190 545**	0.020

Pilot valve type 5470
Pilot valve 4/2 ways

- **to pneumatic actuators DA (Double acting)**
- Version with NAMUR connection
- Circuit function: 4/2-way valve, in rest position pressure inlet 1 connected to outlet 2, outlet 4 exhausted
- Valve material: polyamid
- Electrical connection: cable plug
- For AC 50-60 Hz and DC

Voltage	DN [mm]	NBR Code	kg
230 V, AC/DC	4	**199 190 302**	0.270
115 V, AC/DC	4	**199 190 303**	0.270
24 V, AC/DC	4	**199 190 304**	0.140

Pilot valve type MNL532
Pilot valve 3/2-5/2-ways

Model:

- With NAMUR connection and two silencers/throttle screws

Mode of action:

- 3/2-way valve, in rest position pressure inlet 1 closed, outlet 3 exhausted
- 5/2-way valve, in rest position pressure inlet 1 connected to outlet 4, outlet 3 exhausted
- Material of body: Aluminum

- **to pneumatic actuators**
- Electrical connection: cable plug

Voltage	DN [mm]	NBR Code	kg
230 V, AC	5	**199 190 360**	0.270
110 V, AC	5	**199 190 359**	0.270
48 V, AC	5	**199 190 361**	0.270
24 V, AC	5	**199 190 358**	0.270
24 V, DC	5	**199 190 357**	0.270

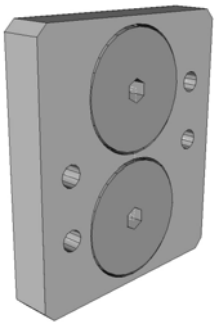

Accessories to type 5470 and type MNL532
NAMUR connector plate for type DIASTAR DN 15-50 and PA11/21

Pos	DN	Series PA11/21	Series 028-FC	Series 025-FC	Series 025-FO/DA
2	15	199 190 378	199 190 378	199 190 378	199 190 378
2	20	199 190 378	199 190 378	199 190 378	199 190 378
2	25	199 190 378	199 190 378	199 190 378	199 190 378
2	32	199 190 378	199 190 378	199 190 379	199 190 378
2	40	199 190 378	199 190 379	199 190 379	199 190 379
2	50	199 190 378	199 190 379	199 190 379	199 190 379

Series 025 / 028 Code	kg
199 190 378	0.111
199 190 379	0.354

ASI bus

AS-Interface type ASEV 2400-11.M
For electric rotary actuators

Code	
199 190 562	

AS-Interface set type ASVC 2300-11
For pneumatic rotary drive

Code	kg	
199 190 560	0.300	

AS-Interface set type FL31
for PA 11 - PA 21 / PA 30 - PA 90

With cable, without pilot valve Code	kg	
199 190 451	0.530	

AS-Interface connection by means of slave
for EA 11 - EA 21 / EA 20 - EA 41

Code	kg	
199 190 463	0.530	

Spare parts for ball valve type 546 PVC-U (DN10/15-50)

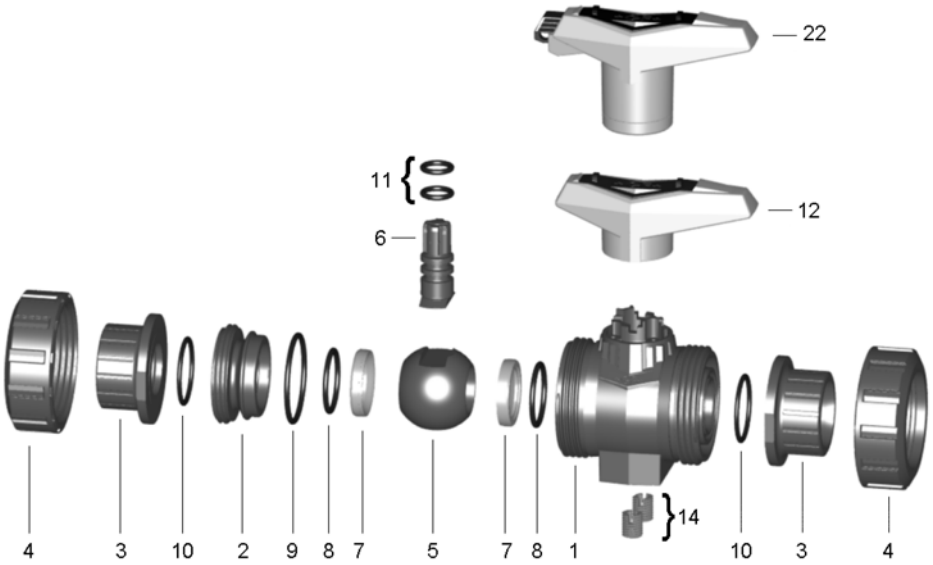

No.	Article / Material	Pieces	d16 DN10	d20 DN15	d25 DN20	d32 DN25	d40 DN32	d50 DN40	Central part
	161 486 151	161 486 151	161 486 152	161 486 153	161 486 154	161 486 155	161 486 156		
1	Body PVC-U	1							
2	Union bush PVC-U	1							
5	Ball PVC-U	1							
6	Stem PVC-U	1							
7	Ball seal PTFE	2							
8	Backing seal EPDM	2							
9	Body seal EPDM	1							
10	Face seal EPDM	2							
11	Stem seal EPDM	2							
12	Lever PP red	1							
14	Threaded bush Stainless steel	2							
	Central part		161 486 163	161 486 163	161 486 164	161 486 165	161 486 166	161 486 167	161 486 168
1	Body PVC-U	1							
2	Union bush PVC-U	1							
5	Ball PVC-U	1							
6	Stem PVC-U	1							
7	Ball seal PTFE	2							
8	Backing seal FPM	2							
9	Body seal FPM	1							
10	Face seal FPM	2							
11	Stem seal FPM	2							
12	Lever PP red	1							
14	Threaded bush Stainless steel	2							

No.	Article / Material	Pieces	d16 DN10	d20 DN15	d25 DN20	d32 DN25	d40 DN32	d50 DN40	
	Ball set		161 486 375	161 486 375	161 486 376	161 486 377	161 486 378	161 486 379	161 486 380
5	Ball PVC-U	1							
6	Stem EPDM	1							
7	Ball seal PTFE	2							
8	Backing seal EPDM	2							
9	Body seal EPDM	1							
11	Stem seal EPDM	2							
	Ball set		161 486 385	161 486 385	161 486 386	161 486 387	161 486 388	161 486 389	161 486 390
5	Ball PVC-U	1							
6	Stem FPM	1							
7	Ball seal PTFE	2							
8	Backing seal FPM	2							
9	Body seal FPM	1							
11	Stem seal FPM	2							
	Seal set		161 486 400	161 486 400	161 486 401	161 486 402	161 486 403	161 486 404	161 486 405
8	Backing seal EPDM	2							
9	Body seal EPDM	1							
10	Face seal EPDM	2							
11	Stem seal EPDM	2							
	Seal set		161 486 410	161 486 410	161 486 411	161 486 412	161 486 413	161 486 414	161 486 415
8	Backing seal FPM	2							
9	Body seal FPM	1							
10	Face seal FPM	2							
11	Stem seal FPM	2							
3	Connecting piece 546 PVC-U (G01) with solvent cement socket metric	1	161 490 666	161 490 667	161 490 668	161 490 669	161 490 670	161 490 671	161 490 672
3	Connecting piece 546 PVC-U (G03) with solvent cement socket Inch ASTM	1	161 490 712	161 490 713	161 490 714	161 490 715	161 490 716	161 490 717	161 490 718
3	Connecting piece 546 PVC-U (G04) with solvent cement socket Inch BS	1	161 490 734	161 490 735	161 490 736	161 490 737	161 490 738	161 490 739	161 490 740
3	Connecting piece 546 PVC-U (G05) with solvent cement spigot metric	1	161 490 701	161 490 702	161 490 703	161 490 704	161 490 705	161 490 706	161 490 707
3	Connecting piece 546 PVC-U (G06) with threaded socket Rp	1	161 490 690	161 490 691	161 490 692	161 490 693	161 490 694	161 490 695	161 490 696
3	Connecting piece 546 PVC-U (G07) with threaded socket Rp fortified	1	161 490 825	161 490 826	161 490 827	161 490 828	161 490 829	161 490 830	161 490 831

No.	Article / Material	Pieces	d16 DN10	d20 DN15	d25 DN20	d32 DN25	d40 DN32	d50 DN40	
3	Connecting piece 546 PVC-U (G08) with threaded socket NPT	1	161 490 723	161 490 724	161 490 725	161 490 726	161 490 727	161 490 728	161 490 729
3	Connecting piece 546 PP-H (G30) with fusion socket metric	1	167 482 900	167 482 901	167 482 902	167 482 903	167 482 904	167 482 905	167 482 906
3	Connecting piece 546 PP-H (G32) with socket fusion spigot metric	1	167 482 922	167 482 923	167 482 924	167 482 925	167 482 926	167 482 927	167 482 928
3	Connecting piece 546 PP-H (G33) with threaded socket Rp fortified	1	167 482 911	167 482 912	167 482 913	167 482 914	167 482 915	167 482 916	167 482 917
3	Connecting piece 546 PP-H (G34) with threaded socket NPT fortified	1	167 480 966	167 482 967	167 482 968	167 482 969	167 482 970	167 482 971	167 482 972
3	Connecting piece 546 PP-H (G35) with butt fusion spigot IR Plus® SDR11 metric	1	-	167 482 945	167 482 946	167 482 947	167 482 948	167 482 749	167 482 950
3	Connecting piece 546 PP-H (G36) with butt fusion spigot SDR17,6 metric	1	-	-	-	-	167 482 937	167 482 938	167 482 939
3	Connecting piece 546 PP-H (G37) with butt fusion spigot long SDR11 metric	1	-	167 482 956	167 482 957	167 482 958	167 482 959	167 482 960	167 482 961
3	Connecting piece 546 PE 100 (G40) with fusion socket metric	1	193 480 175	193 480 176	193 480 177	193 480 178	193 480 179	193 480 180	193 480 181
3	Connecting piece 546 PE 100 (G41) with butt fusion spigot SDR11 metric	1	-	193 480 102	193 480 103	193 480 104	193 480 105	193 480 106	193 480 107
3	Connecting piece 546 PE 100 (G42) with butt fusion spigot SDR17,6 metric	1	-	-	-	-	193 480 086	193 480 087	193 480 088
3	Connecting piece 546 PE 100 (G43) with butt fusion spigot long SDR11 metric	1	-	193 480 152	193 480 153	193 480 154	193 480 155	193 480 156	193 480 157
3	Connecting piece 546 PVC-U (G60) subassembly with fixed flange serrated PVC-U metric	1	-	161 486 360	161 486 361	161 483 362	161 486 363	161 486 364	161 486 365

No.	Article / Material	Pieces	d16 DN10	d20 DN15	d25 DN20	d32 DN25	d40 DN32	d50 DN40	
3	Connecting piece 546 PVC-U (G61) subassembly with fixed flange flat PVC-U metric	1	-	161 486 295	161 486 296	161 486 297	161 486 298	161 486 299	161 486 300
3	Connecting piece 546 PVC-U (G70) subassembly with backing flange PVC-U Inch ANSI	1	-	161 486 265	161 486 266	161 486 267	161 486 268	161 486 269	161 486 270
3	Connecting piece 546 PVC-U (G71) subassembly with backing flange PVC-U Inch ANSI	1	-	161 486 275	161 486 276	161 486 277	161 486 278	161 486 279	161 486 280
3	Connecting piece 546 PVC-U (G72) subassembly with backing flange PP-ST metric	1	-	161 486 285	161 486 286	161 486 287	161 486 288	161 486 289	161 486 290
3	Connecting piece 546 PVC-U (G73) subassembly with backing flange PP-ST ANSI	1	-	161 486 425	161 486 426	161 486 427	161 486 428	161 486 429	161 486 430
3	Connecting piece blank 546 PVC-U (G80)	1	161 490 837	161 490 837	161 490 838	161 490 839	161 490 839	161 490 840	161 490 841
4	Union nut PVC-U	1	161 490 538	161 490 538	161 490 539	161 490 540	161 490 541	161 490 542	161 490 543
12	Standard handle 546 red (K01)	1	167 484 088	167 484 088	167 484 089	167 484 090	167 484 091	167 484 092	167 484 093
12	Standard handle 546 black (K02)	1	167 484 076	167 484 076	167 484 077	167 484 078	167 484 079	161 484 080	167 484 081
22	Multifunction handle 546 red (K11) with ratchet settings lockable	1	167 484 100	167 484 100	167 484 101	167 484 102	167 484 103	167 484 104	167 484 105
10	Face seal EPDM	1	748 410 059	748 410 059	748 410 106	748 410 151	748 410 062	748 410 003	748 410 231
10	Face seal FPM	1	749 410 059	749 410 059	749 410 106	749 410 151	749 410 062	749 410 003	749 410 231

Spare parts for ball valve type 546 PVC-U (DN65-100)

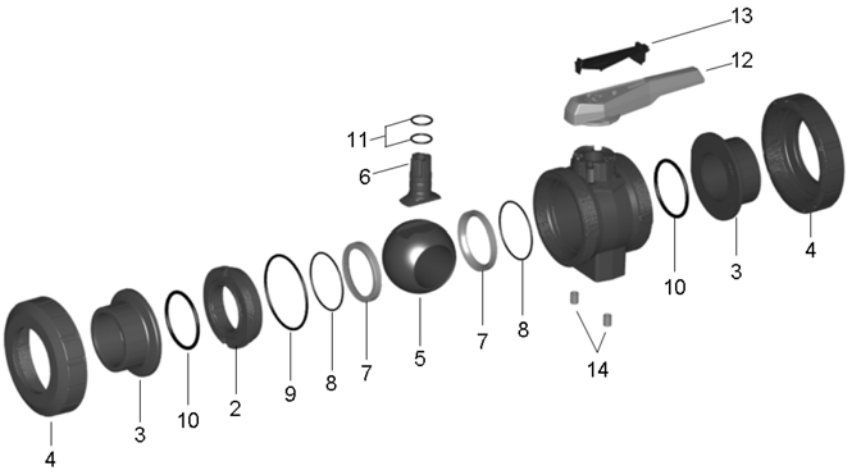

No.	Article / Material	Pieces	d75 DN65	d90 DN80	Central part
	161 486 157	161 486 158	161 486 159		
1	Body PVC-U	1			
2	Union bush PVC-U	1			
5	Ball PVC-U	1			
6	Stem PVC-U	1			
7	Ball seal PTFE	2			
8	Backing seal EPDM	2			
9	Body seal EPDM	1			
10	Face seal EPDM	2			
11	Stem seal EPDM	2			
12	Lever PP red	1			
13	handle clip	1			
14	Threaded bush Stainless steel	2			
	Central part		161 486 169	161 486 170	161 486 171
1	Body PVC-U	1			
2	Union bush PVC-U	1			
5	Ball PVC-U	1			
6	Stem PVC-U	1			
7	Ball seal PTFE	2			
8	Backing seal FPM	2			
9	Body seal FPM	1			
10	Face seal FPM	2			
11	Stem seal FPM	2			
12	Lever PP red	1			
13	handle clip	1			
14	Threaded bush Stainless steel	2			

No.	Article / Material	Pieces	d75 DN65	d90 DN80	
	Ball set		161 486 381	161 486 382	161 486 383
5	Ball PVC-U	1			
6	Stem EPDM	1			
7	Ball seal PTFE	2			
8	Backing seal EPDM	2			
9	Body seal EPDM	1			
11	Stem seal EPDM	2			
	Ball set		161 486 391	161 486 392	161 486 393
5	Ball PVC-U	1			
6	Stem FPM	1			
7	Ball seal PTFE	2			
8	Backing seal FPM	2			
9	Body seal FPM	1			
11	Stem seal FPM	2			
	Seal set		161 486 406	161 486 407	161 486 408
8	Backing seal EPDM	2			
9	Body seal EPDM	1			
10	Face seal EPDM	2			
11	Stem seal EPDM	2			
	Seal set		161 486 416	161 486 417	161 486 418
8	Backing seal FPM	2			
9	Body seal FPM	1			
10	Face seal FPM	2			
11	Stem seal FPM	2			
3	Connecting piece 546 PVC-U (G01) with solvent cement socket metric	1	161 490 673	161 490 674	161 490 675
3	Connecting piece 546 PVC-U (G02) with solvent cement socket JIS	1	161 490 751	161 490 752	161 490 753
3	Connecting piece 546 PVC-U (G03) with solvent cement socket Inch ASTM	1	161 490 719	161 490 720	161 490 721
3	Connecting piece 546 PVC-U (G04) with solvent cement socket Inch BS	1	161 490 673	161 490 742	161 490 743
3	Connecting piece 546 PVC-U (G05) with solvent cement spigot metric	1	161 490 708	161 490 709	161 490 710
3	Connecting piece 546 PVC-U (G06) with threaded socket Rp	1	161 490 697	161 490 698	161 490 699

No.	Article / Material	Pieces	d75 DN65	d90 DN80	
3	Connecting piece 546 PVC-U (G08) with threaded socket NPT	1	161 490 761	161 490 762	161 490 763
3	Connecting piece 546 PVC-U (G09) with threaded socket NPT	1	161 490 730	161 490 731	161 490 732
3	Connecting piece 546 PE 100 (G43) with butt fusion spigot long SDR11 metric	1	193 480 158	193 480 159	193 480 160
3	Connecting piece 546 PE 100 (G44) with butt fusion spigot long SDR17,6 metric	1	163 480 168	163 480 169	163 480 170
3	Connecting piece 546 PVC-U (G70) subassembly with backing flange PVC-U ISO BS	1	161 486 271	161 486 272	161 486 273
3	Connecting piece 546 PVC-U (G71) subassembly with backing flange PVC-U Inch ANSI	1	161 486 281	161 486 282	161 486 283
3	Connecting piece 546 PP (G72) subassembly with backing flange PP-ST ISO BS	1	161 486 291	161 486 292	161 486 293
3	Connecting piece 546 PP (G73) subassembly with backing flange PP-ST ANSI	1	161 486 431	161 486 432	161 486 433
3	Connecting piece 546 PVC-U (G78) subassembly with backing flange JIS	1	161 486 201	161 486 202	161 486 203
4	Union nut PVC-U	1	161 490 544	161 490 545	161 490 546
10	Face seal EPDM	1	748 410 119	748 410 023	748 410 254
10	Face seal FPM	1	749 410 119	749 410 023	749 410 254
12	Standard handle 546 red (K01)	1	167 484 094	167 484 095	167 484 096
12	Standard handle 546 black (K02)	1	167 484 082	167 484 083	167 484 084

Spare parts for ball valve type 546 PVC-C (DN10/15-50)

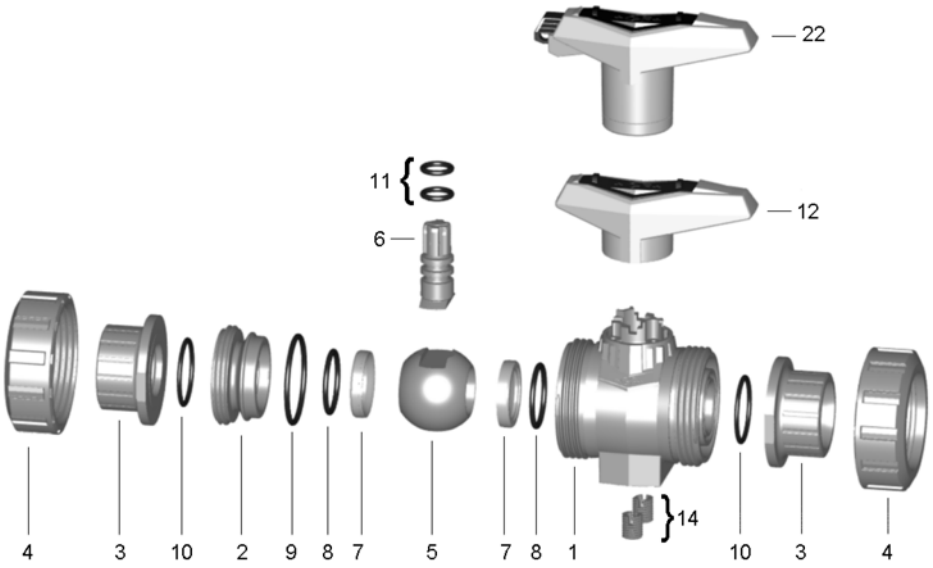

No.	Article / Material	Pieces	d16 DN10	d20 DN15	d25 DN20	d32 DN25	d40 DN32	d50 DN40	Central part
	163 481 251	163 481 251	163 481 252	163 481 253	163 481 254	163 480 255	163 481 256		
1	Body PVC-C	1							
2	Union bush PVC-C	1							
5	Ball PVC-C	1							
6	Stem PVC-C	1							
7	Ball seal PTFE	2							
8	Backing seal EPDM	2							
9	Body seal EPDM	1							
10	Face seal EPDM	2							
11	Stem seal EPDM	2							
12	Lever PP red	1							
14	Threaded bush Stainless steel	2							
	Central part		163 481 263	163 481 263	163 481 264	163 481 265	163 481 266	163 481 267	163 481 268
1	Body PVC-C	1							
2	Union bush PVC-C	1							
5	Ball PVC-C	1							
6	Stem PVC-C	1							
7	Ball seal PTFE	2							
8	Backing seal FPM	2							
9	Body seal FPM	1							
10	Face seal FPM	2							
11	Stem seal FPM	2							
12	Lever PP red	1							
14	Threaded bush Stainless steel	2							

No.	Article / Material	Pieces	d16 DN10	d20 DN15	d25 DN20	d32 DN25	d40 DN32	d50 DN40	
	Ball set		163 481 375	163 481 375	163 481 376	163 481 377	163 481 378	163 481 379	163 481 380
5	Ball PVC-C	1							
6	Stem PVC-C	1							
7	Ball seal PTFE	2							
8	Backing seal EPDM	2							
9	Body seal EPDM	1							
11	Stem seal EPDM	2							
	Ball set		163 481 385	163 481 385	163 481 386	163 481 387	163 481 388	163 481 389	163 481 390
5	Ball PVC-C	1							
6	Stem PVC-C	1							
7	Ball seal PTFE	2							
8	Backing seal FPM	2							
9	Body seal FPM	1							
11	Stem seal FPM	2							
	Seal set		161 486 400	161 486 400	161 486 401	161 486 402	161 486 403	161 486 404	161 486 405
8	Backing seal EPDM	2							
9	Body seal EPDM	1							
10	Face seal EPDM	2							
11	Stem seal EPDM	2							
	Seal set		161 486 410	161 486 410	161 486 411	161 486 412	161 486 413	161 486 414	161 486 415
8	Backing seal FPM	2							
9	Body seal FPM	1							
10	Face seal FPM	2							
11	Stem seal FPM	2							
3	Connecting piece 546 PVC-C (G11) with solvent cement socket metric	1	163 481 275	163 481 276	163 481 277	163 481 278	163 481 279	163 481 280	163 481 281
3	Connecting piece 546 PVC-C (G13) with solvent cement socket Inch ASTM	1	163 481 311	163 481 312	163 481 313	163 481 314	163 481 315	163 481 316	163 481 317
3	Connecting piece 546 PVC-C (G14) with solvent cement spigot metric	1	163 481 300	163 481 301	163 481 302	163 481 303	163 481 304	163 481 305	163 481 306
3	Connecting piece 546 PVC-C (G15) with threaded socket Rp	1	163 481 286	163 481 287	163 481 288	163 481 289	163 481 290	163 481 291	163 481 292
3	Connecting piece 546 PVC-C (G16) with threaded socket Rp fortified	1	163 481 400	163 481 401	163 481 402	163 481 403	163 481 404	163 481 405	163 481 406
3	Connecting piece 546 PVC-C (G17) with threaded socket NPT	1	163 481 322	163 481 323	163 481 324	163 481 325	163 481 326	163 481 327	163 481 328

No.	Article / Material	Pieces	d16 DN10	d20 DN15	d25 DN20	d32 DN25	d40 DN32	d50 DN40	
3	Connecting piece 546 PE 100 (G40) with fusion socket metric	1	193 480 175	193 480 176	193 480 177	193 480 178	193 480 179	193 480 180	193 480 181
3	Connecting piece 546 PE 100 (G41) with butt fusion spigot SDR11 metric	1	-	193 480 102	193 480 103	193 480 104	193 480 105	193 480 106	193 480 107
3	Connecting piece 546 PE 100	1	-	-	-	-	193 480 086	193 480 087	193 480 088
3	Connecting piece 546 PE 100 (G43) with butt fusion spigot long SDR11 metric	1	-	193 480 152	193 480 153	193 480 154	193 480 155	193 480 156	193 480 157
3	Connecting piece 546 PE 100 (G72) subassembly with backing flange PP-ST metric	1	-	163 481 412	163 481 413	163 481 414	163 481 415	163 481 416	163 481 417
3	Connecting piece blank 546 PVC-U (G80)	1	161 490 837	161 490 837	161 490 838	161 490 839	161 490 840	161 490 841	161 490 842
4	Union nut PVC-C	1	163 481 226	163 481 226	163 481 227	163 481 228	163 481 229	163 481 230	1634812231
12	Standard handle 546 red (K01)	1	167 484 088	167 484 088	167 484 089	167 484 090	167 484 091	167 484 092	167 484 093
12	Standard handle 546 black (K02)	1	167 484 076	167 484 076	167 484 077	167 484 078	167 484 079	167 484 080	167 484 081
22	Multifunction handle 546 red (K11) with ratchet settings lockable	1	167 484 100	167 484 100	167 484 101	167 484 102	167 484 103	167 484 104	167 484 105
10	Face seal EPDM	1	748 410 059	748 410 059	748 410 106	748 410 159	748 410 062	748 410 003	748 410 231
10	Face seal FPM	1	749 410 059	749 410 059	749 410 106	749 410 159	749 410 062	749 410 003	749 410 231

Spare parts for ball valve type 546 PVC-C (DN65-100)

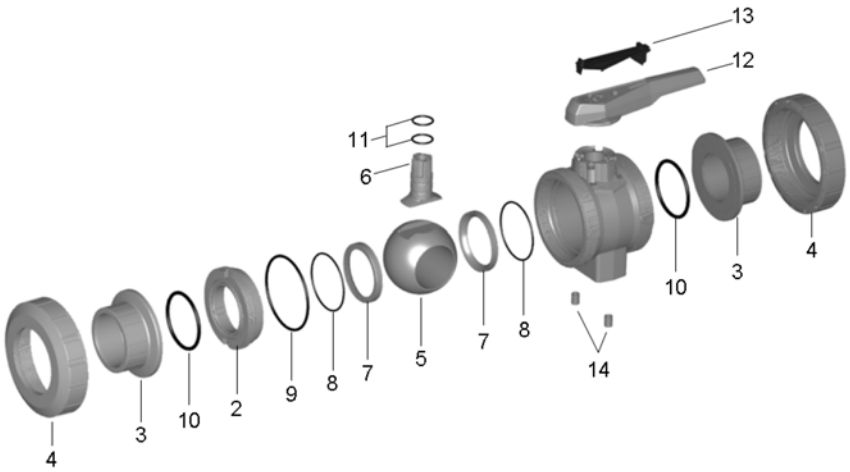

No.	Article / Material	Pieces	d75 DN65	d90 DN80	Central part
	163 481 257	163 480 258	163 481 259		
1	Body PVC-C	1			
2	Union bush PVC-C	1			
5	Ball PVC-C	1			
6	Stem PVC-C	1			
7	Ball seal PTFE	2			
8	Backing seal EPDM	2			
9	Body seal EPDM	1			
10	Face seal EPDM	2			
11	Stem seal EPDM	2			
12	Lever PP red	1			
13	handle clip	1			
14	Threaded bush Stainless steel	2			
	Central part		163 481 269	163 481 270	163 481 271
1	Body PVC-C	1			
2	Union bush PVC-C	1			
5	Ball PVC-C	1			
6	Stem PVC-C	1			
7	Ball seal PTFE	2			
8	Backing seal FPM	2			
9	Body seal FPM	1			
10	Face seal FPM	2			
11	Stem seal FPM	2			
12	Lever PP red	1			
13	handle clip	1			
14	Threaded bush Stainless steel	2			

No.	Article / Material	Pieces	d75 DN65	d90 DN80	
	Ball set		163 481 381	163 481 382	163 481 383
5	Ball PVC-C	1			
6	Stem PVC-C	1			
7	Ball seal PTFE	2			
8	Backing seal EPDM	2			
9	Body seal EPDM	1			
11	Stem seal EPDM	2			
	Ball set		163 481 391	163 481 392	163 481 393
5	Ball PVC-C	1			
6	Stem PVC-C	1			
7	Ball seal PTFE	2			
8	Backing seal FPM	2			
9	Body seal FPM	1			
11	Stem seal FPM	2			
	Seal set		161 486 406	161 486 407	161 486 408
8	Backing seal EPDM	2			
9	Body seal EPDM	1			
10	Face seal EPDM	2			
11	Stem seal EPDM	2			
	Seal set		161 486 416	161 486 417	161 486 418
8	Backing seal FPM	2			
9	Body seal FPM	1			
10	Face seal FPM	2			
11	Stem seal FPM	2			
3	Connecting piece 546 PVC-C (G11) with solvent cement socket metric	1	163 481 282	163 481 283	163 481 284
3	Connecting piece 546 PVC-C (G12) with solvent cement socket JIS	1	163 481 339	163 481 340	163 481 341
3	Connecting piece 546 PVC-C (G13) with solvent cement socket Inch ASTM	1	163 481 318	163 481 319	163 481 320
3	Connecting piece 546 PVC-C (G14) with solvent cement spigot metric	1	163 481 307	163 481 308	163 481 309
3	Connecting piece 546 PVC-C (G15) with threaded socket Rp	1	163 481 293	163 481 294	163 481 295
3	Connecting piece 546 PVC-C (G17) with threaded socket NPT	1	163 481 329	163 481 330	163 481 331

No.	Article / Material	Pieces	d75 DN65	d90 DN80	
3	Connecting piece 546 (G72) subassembly with backing flange PP-ST ISO BS	1	163 481 418	163 481 419	163 481 420
3	Connecting piece 546 (G73) subassembly with backing flange PP-ST ASTM	1	163 481 431	163 481 432	163 481 433
4	Union nut PVC-C	1	163 481 232	163 481 233	1634812234
10	Face seal EPDM	1	748 410 119	748 410 023	748 410 254
10	Face seal FPM	1	749 410 119	749 410 023	749 410 254
12	Standard handle 546 red (K01)	1	167 484 094	167 484 095	167 484 096
12	Standard handle 546 black (K02)	1	167 484 082	167 484 083	167 484 084

Spare parts for ball valve type 546 ABS (DN10/15-50)

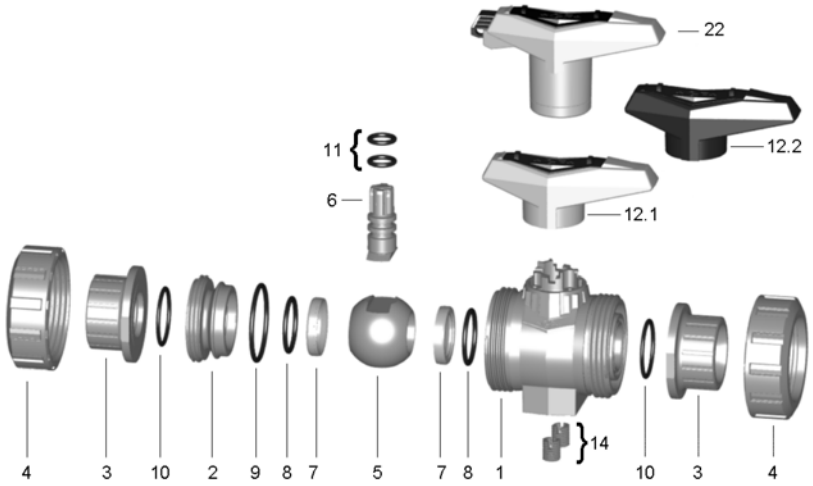

No.	Article / Material	Pieces	d16 DN10	d20 DN15	d25 DN20	d32 DN25	d40 DN32	d50 DN40	Central part
	169 480 751	169 480 751	169 480 752	169 480 753	169 480 754	169 480 755	169 480 756		
1	Body ABS	1							
2	Union bush ABS	1							
5	Ball ABS	1							
6	Stem ABS	1							
7	Ball seal PTFE	2							
8	Backing seal EPDM	2							
9	Body seal EPDM	1							
10	Face seal EPDM	2							
11	Stem seal EPDM	2							
12	Lever PP red	1							
14	Threaded bush Stainless steel	2							
	Ball set		169 480 900	169 480 900	169 480 901	169 480 902	169 480 903	169 480 904	169 480 905
5	Ball ABS	1							
6	Stem ABS	1							
7	Ball seal PTFE	2							
8	Backing seal EPDM	2							
9	Body seal EPDM	1							
11	Stem seal EPDM	2							
	Seal set		161 486 400	161 486 400	161 486 401	161 486 402	161 486 403	161 486 404	161 486 405
8	Backing seal EPDM	2							
9	Body seal EPDM	1							
10	Face seal EPDM	2							
11	Stem seal EPDM	2							

No.	Article / Material	Pieces	d16 DN10	d20 DN15	d25 DN20	d32 DN25	d40 DN32	d50 DN40	
	Seal set		161 486 410	161 486 410	161 486 411	161 486 412	161 486 413	161 486 414	161 486 415
8	Backing seal FPM	2							
9	Body seal FPM	1							
10	Face seal FPM	2							
11	Stem seal FPM	2							
3	Connecting piece 546 ABS (G20) with solvent cement socket metric	1	169 480 775	169 480 776	169 480 777	169 480 778	169 480 779	169 480 780	169 480 781
3	Connecting piece 546 ABS (G21) with solvent cement socket Inch BS	1	169 480 800	169 480 801	169 480 802	169 480 803	169 480 804	169 480 805	169 480 806
3	Connecting piece 546 ABS (G22) with threaded socket Rp	1	169 480 786	169 480 787	169 480 788	169 480 789	169 480 790	169 480 791	169 480 792
3	Connecting piece 546 ABS (G23) with threaded socket Rp fortified	1	169 480 925	169 480 926	169 480 927	169 480 928	169 480 929	169 480 930	169 480 931
3	Connecting piece 546 PE 100 (G40) with fusion socket metric	1	193 480 175	193 480 176	193 480 177	193 480 178	193 480 179	193 480 180	193 480 181
3	Connecting piece 546 PE 100	1	-	193 480 102	193 480 103	193 480 104	193 480 105	193 480 106	193 480 107
3	Connecting piece 546 PE 100 (G42) with butt fusion spigot SDR17,6 metric	1	-	-	-	-	193 480 086	193 480 087	193 480 088
3	Connecting piece 546 PE 100 (G43) with butt fusion spigot long SDR11 metric	1	-	193 480 152	193 480 153	193 480 154	193 480 155	193 480 156	193 480 157
3	Connecting piece blank 546 PVC-U (G80)	1	161 490 837	161 490 837	161 490 838	161 490 839	161 490 840	161 490 841	161 490 842
4	Union nut 546 ABS		169 480 713	169 480 713	169 480 714	169 480 715	169 480 716	169 480 717	169 480 718
12	Standard handle 546 red (K01)	1	167 484 088	167 484 088	167 484 089	167 484 090	167 484 091	167 484 092	167 484 093
12	Standard handle 546 black (K02)	1	167 484 076	167 484 076	167 484 077	167 484 078	167 484 079	167 484 080	167 484 081
22	Multifunction handle 546 red (K11) with ratchet settings lockable	1	167 484 100	167 484 100	167 484 101	167 484 102	167 484 103	167 484 104	167 484 105
10	Face seal EPDM		748 410 059	748 410 059	748 410 106	748 410 151	748 410 062	748 410 003	748 410 231

Spare parts for ball valve type 546 ABS (DN65-100)

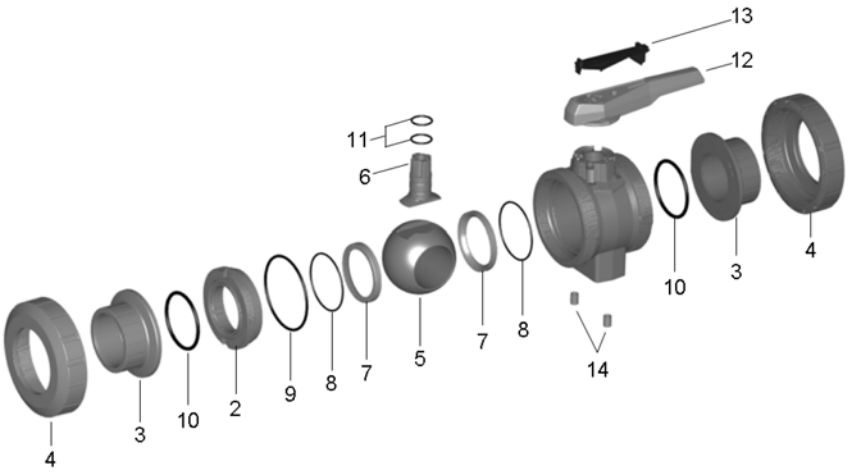

No.	Article / Material	Pieces	d75 DN65	d90 DN80	Central part
	169 480 757	169 480 758	169 480 759		
1	Body ABS	1			
2	Union bush ABS	1			
5	Ball ABS	1			
6	Stem ABS	1			
7	Ball seal PTFE	2			
8	Backing seal EPDM	2			
9	Body seal EPDM	1			
10	Face seal EPDM	2			
11	Stem seal EPDM	2			
12	Lever PP red	1			
13	handle clip	1			
14	Threaded bush Stainless steel	2			
	Ball set		169 480 906	169 480 907	169 480 908
5	Ball ABS	1			
6	Stem ABS	1			
7	Ball seal PTFE	2			
8	Backing seal EPDM	2			
9	Body seal EPDM	1			
11	Stem seal EPDM	2			
	Seal set		161 486 406	161 486 407	161 486 408
8	Backing seal EPDM	2			
9	Body seal EPDM	1			
10	Face seal EPDM	2			
11	Stem seal EPDM	2			

No.	Article / Material	Pieces	d75 DN65	d90 DN80	
3	Connecting piece 546 ABS (G20) with solvent cement socket metric	1	169 480 782	169 480 783	169 480 784
3	Connecting piece 546 ABS (G21) with solvent cement socket Inch BS	1	169 480 782	169 480 808	169 480 809
4	Union nut 546 ABS	1	169 480 719	169 480 720	169 480 721
12	Standard handle 546 red (K01)	1	167 484 094	167 484 095	167 484 096
12	Standard handle 546 black (K02)	1	167 484 082	167 484 083	167 484 084
10	Face seal EPDM	1	748 410 119	748 410 023	748 410 254

Spare parts for ball valve type 546 PP-H (DN10/15-50)

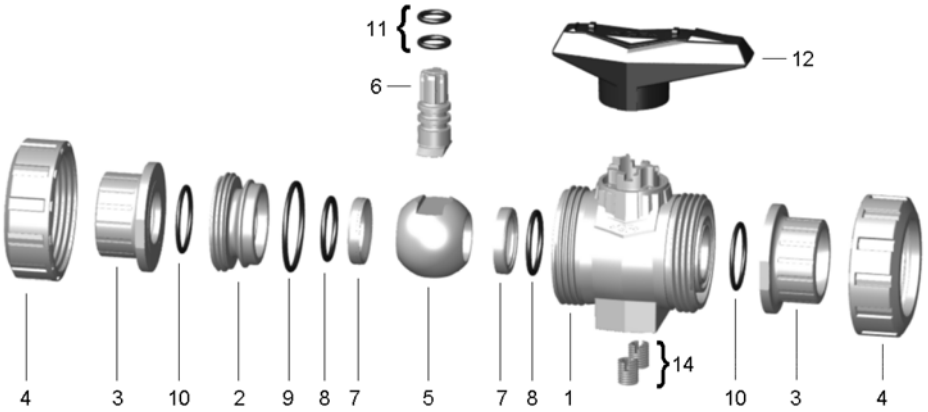

No.	Article / Material	Pieces	d16 DN10	d20 DN15	d25 DN20	d32 DN25	d40 DN32	d50 DN40	Central part
	167 482 876	167 482 876	167 482 877	167 482 878	167 482 879	167 482 880	167 482 881		
1	Body PP	1							
2	Union bush PP	1							
5	Ball PP	1							
6	Stem PP	1							
7	Ball seal PTFE	2							
8	Backing seal EPDM	1							
9	Body seal EPDM	1							
10	Face seal EPDM	2							
11	Stem seal EPDM	2							
12	Lever PP black	1							
14	Threaded bush Stainless steel	3							
	Central part		167 482 888	167 482 888	167 482 889	167 482 890	167 482 891	167 482 892	167 482 893
1	Body PP	1							
2	Union bush PP	1							
5	Ball PP	1							
6	Stem PP	1							
7	Ball seal PTFE	2							
8	Backing seal FPM	1							
9	Body seal FPM	1							
10	Face seal FPM	2							
11	Stem seal FPM	2							
12	Lever PP black	1							
14	Threaded bush Stainless steel	3							
	Ball set		167 484 125	167 484 125	167 484 126	167 484 127	167 484 128	167 484 129	167 484 130
5	Ball PP	1							
6	Stem PP	1							
7	Ball seal PTFE	2							
8	Backing seal EPDM	2							
9	Body seal EPDM	1							
11	Stem seal EPDM	2							

No.	Article / Material	Pieces	d16 DN10	d20 DN15	d25 DN20	d32 DN25	d40 DN32	d50 DN40	
	Ball set		167 484 135	167 484 135	167 484 136	167 484 137	167 484 138	167 484 139	167 484 140
5	Ball PP	1							
6	Stem PP	1							
7	Ball seal PTFE	2							
8	Backing seal FPM	2							
9	Body seal FPM	1							
11	Stem seal FPM	2							
	Seal set		161 486 400	161 486 400	161 486 401	161 486 402	161 486 403	161 486 404	161 486 405
8	Backing seal EPDM	2							
9	Body seal EPDM	1							
10	Face seal EPDM	2							
11	Stem seal EPDM	2							
	Seal set		161 486 410	161 486 410	161 486 411	161 486 412	161 486 413	161 486 414	161 486 415
8	Backing seal FPM	2							
9	Body seal FPM	1							
10	Face seal FPM	2							
11	Stem seal FPM	2							
3	Connecting piece 546 PP-H (G30) with fusion socket metric	1	167 482 900	167 482 901	167 482 902	167 482 903	167 482 904	167 482 905	167 482 906
3	Connecting piece 546 PP-H (G32) with socket fusion spigot metric	1	167 482 922	167 482 923	167 482 924	167 482 925	167 482 926	167 482 927	167 482 928
3	Connecting piece 546 PP-H (G33) with threaded socket Rp fortified	1	167 482 911	167 482 912	167 482 913	167 482 914	167 482 915	167 482 916	167 482 917
3	Connecting piece 546 PP-H (G34) with threaded socket NPT fortified	1	167 482 966	167 482 967	167 482 968	167 482 969	167 482 970	167 482 971	167 482 972
3	Connecting piece 546 PP-H (G35) with butt fusion spigot IR Plus® SDR11 metric	1	-	167 482 945	167 482 946	167 482 947	167 482 948	167 482 949	167 482 950
3	Connecting piece 546 PP-H (G36) with butt fusion spigot SDR17,6 metric	1	-	-	-	-	167 482 937	167 482 938	167 482 939
3	Connecting piece 546 PP-H (G37) with butt fusion spigot long SDR11 metric	1	-	167 482 956	167 482 957	167 482 958	167 482 959	167 482 960	167 482 961
3	Connecting piece 546 PP-H (G63) subassembly with fixed flange serrated PP-H metric	1	-	167 484 160	167 484 161	167 484 162	167 484 163	167 484 164	167 484 165

No.	Article / Material	Pieces	d16 DN10	d20 DN15	d25 DN20	d32 DN25	d40 DN32	d50 DN40	
3	Connecting piece 546 PP-H (G73) subassembly with backing flange PP-ST ANSI	1	-	167 482 956	167 482 957	167 482 958	167 482 959	-	-
3	Connecting piece 546 PE 100 (G40) with fusion socket metric	1	193 480 175	193 480 176	193 480 177	193 480 178	193 480 179	193 480 180	193 480 181
3	Connecting piece 546 PE 100 (G41) with butt fusion spigot SDR11 metric	1	-	193 480 102	193 480 103	193 480 104	193 480 105	193 480 106	193 480 107
3	Connecting piece 546 PE 100 (G42) with butt fusion spigot SDR17,6 metric	1	-	-	-	-	193 480 086	193 480 087	193 480 088
3	Connecting piece 546 PE 100 (G43) with butt fusion spigot long SDR11 metric	1	-	193 480 152	193 480 153	193 480 154	193 480 155	193 480 156	193 480 157
3	Connecting piece 546 PVC-C (G11) with solvent cement socket metric	1	163 481 275	163 481 276	163 481 277	163 481 278	163 481 279	163 481 280	163 481 281
3	Connecting piece 546 PVC-C (G13) with solvent cement socket Inch ASTM	1	163 481 311	163 481 312	163 481 313	163 481 314	163 481 315	163 481 316	163 481 317
3	Connecting piece 546 PVC-C (G14) with solvent cement spigot metric	1	163 481 300	163 481 301	163 481 302	163 481 303	163 481 304	163 481 305	163 481 306
3	Connecting piece 546 PVC-C (G15) with threaded socket Rp	1	163 481 286	163 481 287	163 481 288	163 481 289	163 481 290	163 481 291	163 481 292
3	Connecting piece 546 PVC-C (G16) with threaded socket Rp fortified	1	163 481 400	163 481 401	163 481 402	163 481 403	163 481 404	163 481 405	163 481 406
3	Connecting piece 546 PVC-C (G17) with threaded socket NPT	1	163 481 322	163 481 323	163 481 324	163 481 325	163 481 326	163 481 327	163 481 328
4	Union nut 546 PP-H	1	167 482 712	167 482 712	167 482 713	167 482 714	167 482 715	167 482 716	167 482 717
12	Standard handle 546 red (K01)	1	167 484 088	167 484 088	167 484 089	167 484 090	167 484 091	167 484 092	167 484 093

No.	Article / Material	Pieces	d16 DN10	d20 DN15	d25 DN20	d32 DN25	d40 DN32	d50 DN40	
12	Standard handle 546 black (K02)	1	167 484 076	167 484 076	167 484 077	167 484 078	167 484 079	167 484 080	167 484 081
22	Multifunction handle 546 red (K11) with ratchet settings lockable	1	167 484 100	167 484 100	167 484 101	167 484 102	167 484 103	167 484 104	167 484 105
10	Face seal EPDM	1	748 410 059	748 410 059	748 410 106	748 410 151	748 410 062	748 410 003	748 410 231
10	Face seal FPM	1	749 410 059	749 410 059	749 410 106	749 410 151	749 410 062	749 410 003	749 410 231

Spare parts for ball valve type 546 PP-H (DN65-100)

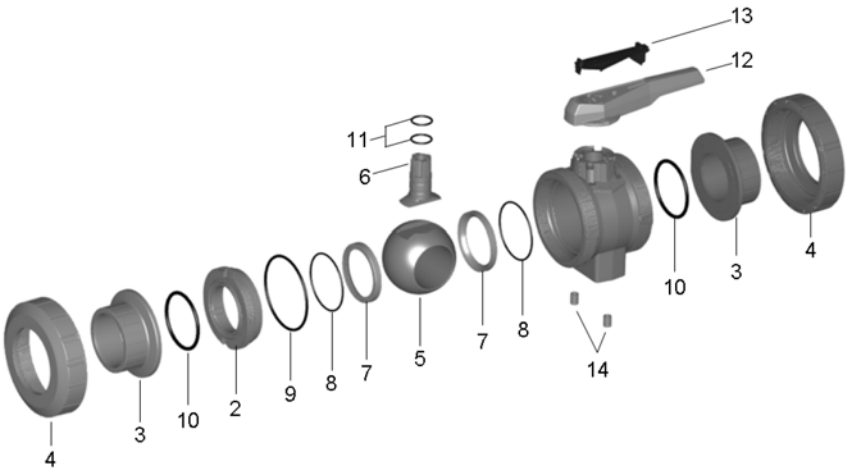

No.	Article / Material	Pieces	d75 DN65	d90 DN80	Central part
	167 482 882	167 482 883	167 482 884		
1	Body PP	1			
2	Union bush PP	1			
5	Ball PP	1			
6	Stem PP	1			
7	Ball seal PTFE	2			
8	Backing seal EPDM	1			
9	Body seal EPDM	1			
10	Face seal EPDM	2			
11	Stem seal EPDM	2			
12	Lever PP black	1			
13	handle clip	1			
14	Threaded bush Stainless steel	3			
	Central part		167 482 894	167 482 895	167 482 896
1	Body PP	1			
2	Union bush PP	1			
5	Ball PP	1			
6	Stem PP	1			
7	Ball seal PTFE	2			
8	Backing seal FPM	1			
9	Body seal FPM	1			
10	Face seal FPM	2			
11	Stem seal FPM	2			
12	Lever PP black	1			
13	handle clip	1			
14	Threaded bush Stainless steel	3			

No.	Article / Material	Pieces	d75 DN65	d90 DN80	
	Ball set		167 484 131	167 484 132	167 484 133
5	Ball PP	1			
6	Stem PP	1			
7	Ball seal PTFE	2			
8	Backing seal EPDM	2			
9	Body seal EPDM	1			
11	Stem seal EPDM	2			
	Ball set		167 484 141	167 484 142	167 484 143
5	Ball PP	1			
6	Stem PP	1			
7	Ball seal PTFE	2			
8	Backing seal FPM	2			
9	Body seal FPM	1			
11	Stem seal FPM	2			
	Seal set		161 486 406	161 486 407	161 486 408
8	Backing seal EPDM	2			
9	Body seal EPDM	1			
10	Face seal EPDM	2			
11	Stem seal EPDM	2			
	Seal set		161 486 416	161 486 417	161 486 418
8	Backing seal FPM	2			
9	Body seal FPM	1			
10	Face seal FPM	2			
11	Stem seal FPM	2			
3	Connecting piece 546 PP-H (G30) with fusion socket metric	1	167 482 907	167 482 908	167 482 909
3	Connecting piece 546 PP-H (G32) with socket fusion spigot metric	1	167 482 929	167 482 930	167 482 931
3	Connecting piece 546 PP-H (G35) with butt fusion spigot IR Plus® SDR11 metric	1	167 482 951	167 482 952	167 482 953
3	Connecting piece 546 PP-H (G36) with butt fusion spigot SDR17,6 metric	1	167 482 940	167 482 941	167 482 942
3	Connecting piece 546 (G73) subassembly with backing flange PP-ST ANSI	1	167 484 071	167 484 072	167 484 073
3	Connecting piece 546 (G77) subassembly with backing flange PP-GF JIS	1	167 484 481	167 484 482	167 484 483

No.	Article / Material	Pieces	d75 DN65	d90 DN80	
3	Connecting piece 546 (G72) subassembly with backing flange PP-ST ISO BS	1	167 484 418	167 484 419	167 484 420
3	Connecting piece 546 PE 100 (G43) with butt fusion spigot long SDR11 metric	1	193 480 158	193 480 159	193 480 160
3	Connecting piece 546 PE 100 (G44) with butt fusion spigot long SDR17,6 metric	1	193 480 168	193 480 169	193 480 170
4	Union nut 546 PP-H	1	167 482 718	167 482 719	167 482 720
12	Standard handle 546 red (K01)	1	167 484 094	167 484 095	167 484 096
12	Standard handle 546 black (K02)	1	167 484 082	167 484 083	167 484 084
10	Face seal EPDM	1	748 410 119	748 410 023	748 410 254
10	Face seal FPM	1	749 410 119	749 410 023	749 410 254

Spare parts for ball valve type 546 PVDF

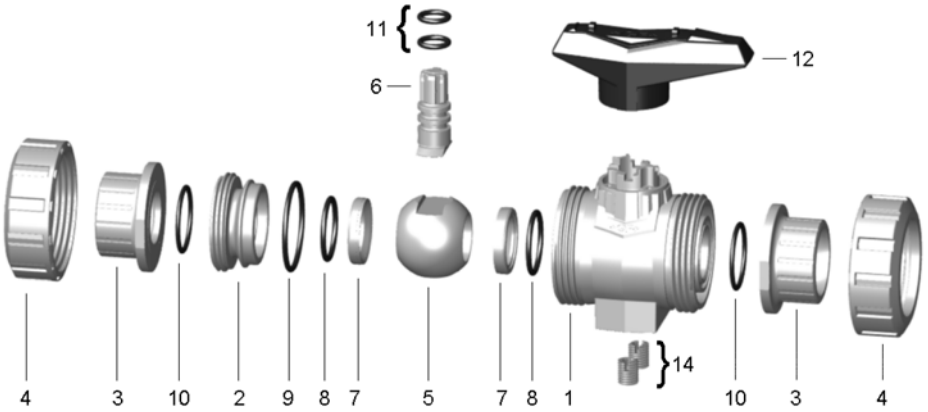

No.	Article / Material	Pieces	d16 DN10	d20 DN15	d25 DN20	d32 DN25	d40 DN32	d50 DN40	Central part
	175 482 963	175 482 963	175 482 964	175 482 965	175 482 966	175 482 967	175 482 968		
1	Body PVDF	1							
2	Union bush PVDF	1							
5	Ball PVDF	1							
6	Stem PVDF	1							
7	Ball seal PTFE	2							
8	Backing seal FPM	2							
9	Body seal FPM	1							
10	Face seal FPM	2							
11	Stem seal FPM	2							
12	Lever PP black	1							
14	Threaded bush Stainless steel	2							
	Ball set		175 483 275	175 483 275	175 483 276	175 483 277	175 483 278	175 483 279	175 483 280
5	Ball PVDF	1							
6	Stem PVDF	1							
7	Ball seal PTFE	2							
8	Backing seal FPM	2							
9	Body seal FPM	1							
11	Stem seal FPM	2							
	Seal set		161 486 410	161 486 410	161 486 411	161 486 412	161 486 413	161 486 414	161 486 415
8	Backing seal FPM	2							
9	Body seal FPM	1							
10	Face seal FPM	2							
11	Stem seal FPM	2							
3	Connecting piece 546 PVDF (G50) with fusion socket metric	1	175 483 025	175 483 026	175 483 027	175 483 028	175 483 029	175 483 030	175 483 031
3	Connecting piece 546 PVDF (G51) with socket fusion spigot metric	1	175 483 036	175 483 037	175 483 038	175 483 039	175 483 040	175 483 041	175 483 042
3	Connecting piece 546 PVDF (G52) with butt fusion spigot IR-Plus® metric	1	-	175 483 048	175 483 049	175 483 050	175 483 051	175 483 052	175 483 053

No.	Article / Material	Pieces	d16 DN10	d20 DN15	d25 DN20	d32 DN25	d40 DN32	d50 DN40	
3	Connecting piece 546 PVDF (G53) with threaded socket NPT	1	175 483 058	175 483 059	175 483 060	175 483 061	175 483 062	175 483 063	175 483 064
3	Connecting piece 546 PVDF (G64) subassembly with fixed flange serrated PVDF metric	1	-	175 483 285	175 483 286	175 483 287	175 483 288	175 483 289	175 483 290
4	Union nut 546 PVDF	1	175 482 937	175 482 937	175 482 938	175 482 939	175 482 940	175 482 941	175 482 942
12	Standard handle 546 red (K01)	1	167 484 088	167 484 088	167 484 089	167 484 090	167 484 091	167 484 092	167 484 093
12	Standard handle 546 black (K02)	1	167 484 076	167 484 076	167 484 077	167 484 078	167 484 079	167 484 080	167 484 081
22	Multifunction handle 546 red (K11) with ratchet settings lockable	1	167 484 100	167 484 100	167 484 101	167 484 102	167 484 103	167 484 104	167 484 105
10	Face seal FPM	1	749 470 059	749 470 059	749 470 106	749 470 151	749 470 062	749 470 003	749 470 231

Index

Code	Page
161 483 362	393
161 484 080	393
161 486 151	393
161 486 152	393
161 486 153	393
161 486 154	393
161 486 155	393
161 486 156	393
161 486 157	396
161 486 158	396
161 486 159	396
161 486 163	393
161 486 164	393
161 486 165	393
161 486 166	393
161 486 167	393
161 486 168	393
161 486 169	396
161 486 170	396
161 486 171	396
161 486 201	396
161 486 202	396
161 486 203	396
161 486 265	341
161 486 266	341
161 486 267	341
161 486 268	341
161 486 269	341
161 486 270	341
161 486 271	341
161 486 272	341
161 486 273	341
161 486 275	342
161 486 276	342
161 486 277	342
161 486 278	342
161 486 279	342
161 486 280	342
161 486 281	342
161 486 282	342
161 486 283	342
161 486 285	342
161 486 286	342
161 486 287	342
161 486 288	342
161 486 289	342
161 486 290	342
161 486 291	342
161 486 292	342
161 486 293	342
161 486 295	341
161 486 296	341
161 486 297	341
161 486 298	341
161 486 299	341
161 486 300	341
161 486 360	341
161 486 361	341
161 486 362	341
161 486 363	341
161 486 364	341
161 486 365	341
161 486 375	393
161 486 376	393
161 486 377	393
161 486 378	393
161 486 379	393

Code	Page
161 486 380	393
161 486 381	396
161 486 382	396
161 486 383	396
161 486 385	393
161 486 386	393
161 486 387	393
161 486 388	393
161 486 389	393
161 486 390	393
161 486 391	396
161 486 392	396
161 486 393	396
161 486 400	393
161 486 401	393
161 486 402	393
161 486 403	393
161 486 404	393
161 486 405	393
161 486 406	396
161 486 407	396
161 486 408	396
161 486 410	393
161 486 411	393
161 486 412	393
161 486 413	393
161 486 414	393
161 486 415	393
161 486 416	396
161 486 417	396
161 486 418	396
161 486 425	342
161 486 426	342
161 486 427	342
161 486 428	342
161 486 429	342
161 486 430	342
161 486 431	342
161 486 432	342
161 486 433	342
161 486 435	362
161 486 436	362
161 486 437	362
161 486 438	362
161 486 443	362
161 486 444	362
161 486 445	362
161 486 446	362
161 486 640	354
161 486 641	354
161 486 642	354
161 486 651	354
161 486 652	354
161 486 653	354
161 486 689	361
161 486 690	361
161 486 691	361
161 490 538	355
161 490 539	355
161 490 540	355
161 490 541	355
161 490 542	355
161 490 543	355
161 490 544	355
161 490 545	355
161 490 546	355
161 490 666	338

Code	Page
161 490 667	338
161 490 668	338
161 490 669	338
161 490 670	338
161 490 671	338
161 490 672	338
161 490 673	338
161 490 674	338
161 490 675	338
161 490 690	339
161 490 691	339
161 490 692	339
161 490 693	339
161 490 694	339
161 490 695	339
161 490 696	339
161 490 697	339
161 490 698	339
161 490 699	339
161 490 701	339
161 490 702	339
161 490 703	339
161 490 704	339
161 490 705	339
161 490 706	339
161 490 707	339
161 490 708	339
161 490 709	339
161 490 710	339
161 490 712	338
161 490 713	338
161 490 714	338
161 490 715	338
161 490 716	338
161 490 717	338
161 490 718	338
161 490 719	338
161 490 720	338
161 490 721	338
161 490 723	340
161 490 724	340
161 490 725	340
161 490 726	340
161 490 727	340
161 490 728	340
161 490 729	340
161 490 730	340
161 490 731	340
161 490 732	340
161 490 734	339
161 490 735	339
161 490 736	339
161 490 737	339
161 490 738	339
161 490 739	339
161 490 740	339
161 490 742	339
161 490 743	339
161 490 751	396
161 490 752	396
161 490 753	396
161 490 755	340
161 490 756	340
161 490 757	340
161 490 758	340
161 490 759	340
161 490 760	340

Index

Code	Page
161 490 761	340
161 490 762	340
161 490 763	340
161 490 825	340
161 490 826	340
161 490 827	340
161 490 828	340
161 490 829	340
161 490 830	340
161 490 831	340
161 490 837	343
161 490 838	343
161 490 839	343
161 490 840	343
161 490 841	343
161 490 842	343
161 491 084	338
161 491 085	338
161 546 001	7
161 546 002	7
161 546 003	7
161 546 004	7
161 546 005	7
161 546 006	7
161 546 007	7
161 546 008	7
161 546 009	7
161 546 010	7
161 546 011	7
161 546 012	7
161 546 013	7
161 546 014	7
161 546 015	7
161 546 016	7
161 546 017	7
161 546 018	7
161 546 019	7
161 546 020	7
161 546 021	11
161 546 022	11
161 546 023	11
161 546 024	11
161 546 025	11
161 546 026	11
161 546 027	11
161 546 028	11
161 546 029	11
161 546 030	11
161 546 031	11
161 546 032	11
161 546 033	11
161 546 034	11
161 546 035	11
161 546 036	11
161 546 037	11
161 546 038	11
161 546 039	11
161 546 040	11
161 546 041	9
161 546 042	9
161 546 043	9
161 546 044	9
161 546 045	9
161 546 046	9
161 546 047	9
161 546 048	9
161 546 049	9

Code	Page
161 546 050	9
161 546 051	9
161 546 052	9
161 546 053	9
161 546 054	9
161 546 055	9
161 546 056	9
161 546 057	9
161 546 058	9
161 546 059	9
161 546 060	9
161 546 061	8
161 546 062	8
161 546 063	8
161 546 064	8
161 546 065	8
161 546 066	8
161 546 067	8
161 546 068	8
161 546 069	8
161 546 070	8
161 546 071	8
161 546 072	8
161 546 073	8
161 546 074	8
161 546 075	8
161 546 076	8
161 546 077	8
161 546 078	8
161 546 079	8
161 546 080	8
161 546 081	29
161 546 082	29
161 546 083	29
161 546 084	29
161 546 085	29
161 546 086	29
161 546 087	29
161 546 088	29
161 546 089	29
161 546 090	29
161 546 091	29
161 546 092	29
161 546 093	29
161 546 094	29
161 546 095	29
161 546 096	29
161 546 097	29
161 546 098	29
161 546 099	29
161 546 100	29
161 546 108	14
161 546 109	14
161 546 110	14
161 546 118	14
161 546 119	14
161 546 120	14
161 546 128	34
161 546 129	34
161 546 130	34
161 546 138	34
161 546 139	34
161 546 140	34
161 546 168	18
161 546 169	18
161 546 170	18
161 546 178	18

Code	Page
161 546 179	18
161 546 180	18
161 546 188	37
161 546 189	37
161 546 190	37
161 546 198	37
161 546 199	37
161 546 200	37
161 546 201	16
161 546 202	16
161 546 203	16
161 546 204	16
161 546 205	16
161 546 206	16
161 546 207	16
161 546 209	16
161 546 210	16
161 546 211	16
161 546 212	16
161 546 213	16
161 546 214	16
161 546 215	16
161 546 216	16
161 546 217	16
161 546 219	16
161 546 220	16
161 546 221	30
161 546 222	30
161 546 223	30
161 546 224	30
161 546 225	30
161 546 226	30
161 546 227	30
161 546 229	30
161 546 230	30
161 546 231	30
161 546 232	30
161 546 233	30
161 546 234	30
161 546 235	30
161 546 236	30
161 546 237	30
161 546 239	30
161 546 240	30
161 546 241	17
161 546 242	17
161 546 243	17
161 546 244	17
161 546 245	17
161 546 246	17
161 546 247	17
161 546 249	17
161 546 250	17
161 546 251	17
161 546 252	17
161 546 253	17
161 546 254	17
161 546 255	17
161 546 256	17
161 546 257	17
161 546 259	17
161 546 260	17
161 546 301	19
161 546 302	19
161 546 303	19
161 546 304	19
161 546 305	19

Index

Code	Page
161 546 306	19
161 546 307	19
161 546 308	19
161 546 309	19
161 546 310	19
161 546 311	19
161 546 312	19
161 546 313	19
161 546 314	19
161 546 315	19
161 546 316	19
161 546 317	19
161 546 318	19
161 546 319	19
161 546 320	19
161 546 341	20
161 546 342	20
161 546 343	20
161 546 344	20
161 546 345	20
161 546 346	20
161 546 347	20
161 546 348	20
161 546 349	20
161 546 350	20
161 546 351	20
161 546 352	20
161 546 353	20
161 546 354	20
161 546 355	20
161 546 356	20
161 546 357	20
161 546 358	20
161 546 359	20
161 546 360	20
161 546 361	31
161 546 362	31
161 546 363	31
161 546 364	31
161 546 365	31
161 546 366	31
161 546 367	31
161 546 368	31
161 546 369	31
161 546 370	31
161 546 371	31
161 546 372	31
161 546 373	31
161 546 374	31
161 546 375	31
161 546 376	31
161 546 377	31
161 546 378	31
161 546 379	31
161 546 380	31
161 546 601	32
161 546 602	32
161 546 603	32
161 546 604	32
161 546 605	32
161 546 606	32
161 546 607	32
161 546 608	32
161 546 609	32
161 546 610	32
161 546 611	32
161 546 612	32

Code	Page
161 546 613	32
161 546 614	32
161 546 615	32
161 546 616	32
161 546 617	32
161 546 618	32
161 546 619	32
161 546 620	32
161 546 681	35
161 546 682	35
161 546 683	35
161 546 684	35
161 546 685	35
161 546 686	35
161 546 687	35
161 546 688	35
161 546 689	35
161 546 690	35
161 546 691	35
161 546 692	35
161 546 693	35
161 546 694	35
161 546 695	35
161 546 696	35
161 546 697	35
161 546 698	35
161 546 699	35
161 546 700	35
161 546 721	10
161 546 722	10
161 546 723	10
161 546 724	10
161 546 725	10
161 546 726	10
161 546 727	10
161 546 728	10
161 546 729	10
161 546 730	10
161 546 731	10
161 546 732	10
161 546 733	10
161 546 734	10
161 546 735	10
161 546 736	10
161 546 737	10
161 546 738	10
161 546 739	10
161 546 740	10
161 546 741	12
161 546 742	12
161 546 743	12
161 546 744	12
161 546 745	12
161 546 746	12
161 546 747	12
161 546 748	12
161 546 749	12
161 546 750	12
161 546 751	12
161 546 752	12
161 546 753	12
161 546 754	12
161 546 755	12
161 546 756	12
161 546 757	12
161 546 758	12
161 546 759	12

Code	Page
161 546 760	12
161 546 761	22
161 546 762	22
161 546 763	22
161 546 764	22
161 546 765	22
161 546 766	22
161 546 767	22
161 546 771	22
161 546 772	22
161 546 773	22
161 546 774	22
161 546 775	22
161 546 776	22
161 546 777	22
161 546 782	24
161 546 783	24
161 546 784	24
161 546 785	24
161 546 786	24
161 546 787	24
161 546 792	24
161 546 793	24
161 546 794	24
161 546 795	24
161 546 796	24
161 546 797	24
161 546 805	24
161 546 806	24
161 546 807	24
161 546 815	24
161 546 816	24
161 546 817	24
161 546 822	27
161 546 823	27
161 546 824	27
161 546 825	27
161 546 826	27
161 546 827	27
161 546 832	27
161 546 833	27
161 546 834	27
161 546 835	27
161 546 836	27
161 546 837	27
161 546 841	36
161 546 842	36
161 546 843	36
161 546 844	36
161 546 845	36
161 546 846	36
161 546 847	36
161 546 848	36
161 546 849	36
161 546 850	36
161 546 851	36
161 546 852	36
161 546 853	36
161 546 854	36
161 546 855	36
161 546 856	36
161 546 857	36
161 546 858	36
161 546 859	36
161 546 860	36
161 546 948	15
161 546 949	15

Index

Code	Page
161 546 950	15
161 546 958	15
161 546 959	15
161 546 960	15
163 480 168	396
163 480 169	396
163 480 170	396
163 480 255	400
163 480 258	403
163 481 226	355
163 481 227	355
163 481 228	355
163 481 229	355
163 481 230	355
163 481 231	355
163 481 232	355
163 481 233	355
163 481 234	355
163 481 251	400
163 481 252	400
163 481 253	400
163 481 254	400
163 481 256	400
163 481 257	403
163 481 259	403
163 481 263	400
163 481 264	400
163 481 265	400
163 481 266	400
163 481 267	400
163 481 268	400
163 481 269	403
163 481 270	403
163 481 271	403
163 481 275	343
163 481 276	343
163 481 277	343
163 481 278	343
163 481 279	343
163 481 280	343
163 481 281	343
163 481 282	343
163 481 283	343
163 481 284	343
163 481 286	344
163 481 287	344
163 481 288	344
163 481 289	344
163 481 290	344
163 481 291	344
163 481 292	344
163 481 293	344
163 481 294	344
163 481 295	344
163 481 300	344
163 481 301	344
163 481 302	344
163 481 303	344
163 481 304	344
163 481 305	344
163 481 306	344
163 481 307	344
163 481 308	344
163 481 309	344
163 481 311	343
163 481 312	343
163 481 313	343

Code	Page
163 481 314	343
163 481 315	343
163 481 316	343
163 481 317	343
163 481 318	343
163 481 319	343
163 481 320	343
163 481 322	345
163 481 323	345
163 481 324	345
163 481 325	345
163 481 326	345
163 481 327	345
163 481 328	345
163 481 329	345
163 481 330	345
163 481 331	345
163 481 339	403
163 481 340	403
163 481 341	403
163 481 375	400
163 481 376	400
163 481 377	400
163 481 378	400
163 481 379	400
163 481 380	400
163 481 381	403
163 481 382	403
163 481 383	403
163 481 385	400
163 481 386	400
163 481 387	400
163 481 388	400
163 481 389	400
163 481 390	400
163 481 391	403
163 481 392	403
163 481 393	403
163 481 400	344
163 481 401	344
163 481 402	344
163 481 403	344
163 481 404	344
163 481 405	344
163 481 406	344
163 481 412	345
163 481 413	345
163 481 414	345
163 481 415	345
163 481 416	345
163 481 417	345
163 481 418	345
163 481 419	345
163 481 420	345
163 481 425	345
163 481 426	345
163 481 427	345
163 481 428	345
163 481 429	345
163 481 430	345
163 481 431	345
163 481 432	345
163 481 433	345
163 546 001	101
163 546 002	101
163 546 003	101
163 546 004	101

Code	Page
163 546 005	101
163 546 006	101
163 546 007	101
163 546 008	101
163 546 009	101
163 546 010	101
163 546 011	101
163 546 012	101
163 546 013	101
163 546 014	101
163 546 015	101
163 546 016	101
163 546 017	101
163 546 018	101
163 546 019	101
163 546 020	101
163 546 021	105
163 546 022	105
163 546 023	105
163 546 024	105
163 546 025	105
163 546 026	105
163 546 027	105
163 546 028	105
163 546 029	105
163 546 030	105
163 546 031	105
163 546 032	105
163 546 033	105
163 546 034	105
163 546 035	105
163 546 036	105
163 546 037	105
163 546 038	105
163 546 039	105
163 546 040	105
163 546 041	103
163 546 042	103
163 546 043	103
163 546 044	103
163 546 045	103
163 546 046	103
163 546 047	103
163 546 048	103
163 546 049	103
163 546 050	103
163 546 051	103
163 546 052	103
163 546 053	103
163 546 054	103
163 546 055	103
163 546 056	103
163 546 057	103
163 546 058	103
163 546 059	103
163 546 060	103
163 546 061	102
163 546 062	102
163 546 063	102
163 546 064	102
163 546 065	102
163 546 066	102
163 546 067	102
163 546 068	102
163 546 069	102
163 546 070	102
163 546 071	102

Index

Code	Page
163 546 072	102
163 546 073	102
163 546 074	102
163 546 075	102
163 546 076	102
163 546 077	102
163 546 078	102
163 546 079	102
163 546 080	102
163 546 081	111
163 546 082	111
163 546 083	111
163 546 084	111
163 546 085	111
163 546 086	111
163 546 087	111
163 546 088	111
163 546 089	111
163 546 090	111
163 546 091	111
163 546 092	111
163 546 093	111
163 546 094	111
163 546 095	111
163 546 096	111
163 546 097	111
163 546 098	111
163 546 099	111
163 546 100	111
163 546 108	107
163 546 109	107
163 546 110	107
163 546 118	107
163 546 119	107
163 546 120	107
163 546 168	110
163 546 169	110
163 546 170	110
163 546 178	110
163 546 179	110
163 546 180	110
163 546 301	109
163 546 302	109
163 546 303	109
163 546 304	109
163 546 305	109
163 546 306	109
163 546 307	109
163 546 308	109
163 546 309	109
163 546 310	109
163 546 311	109
163 546 312	109
163 546 313	109
163 546 314	109
163 546 315	109
163 546 316	109
163 546 317	109
163 546 318	109
163 546 319	109
163 546 320	109
163 546 341	108
163 546 342	108
163 546 343	108
163 546 344	108
163 546 345	108
163 546 346	108

Code	Page
163 546 347	108
163 546 351	108
163 546 352	108
163 546 353	108
163 546 354	108
163 546 355	108
163 546 356	108
163 546 357	108
163 546 361	112
163 546 362	112
163 546 363	112
163 546 364	112
163 546 365	112
163 546 366	112
163 546 367	112
163 546 368	112
163 546 369	112
163 546 370	112
163 546 371	112
163 546 372	112
163 546 373	112
163 546 374	112
163 546 375	112
163 546 376	112
163 546 377	112
163 546 378	112
163 546 379	112
163 546 380	112
163 546 381	104
163 546 382	104
163 546 383	104
163 546 384	104
163 546 385	104
163 546 386	104
163 546 387	104
163 546 388	104
163 546 389	104
163 546 390	104
163 546 391	104
163 546 392	104
163 546 393	104
163 546 394	104
163 546 395	104
163 546 396	104
163 546 397	104
163 546 398	104
163 546 399	104
163 546 400	104
163 546 401	106
163 546 402	106
163 546 403	106
163 546 404	106
163 546 405	106
163 546 406	106
163 546 407	106
163 546 408	106
163 546 409	106
163 546 410	106
163 546 411	106
163 546 412	106
163 546 413	106
163 546 414	106
163 546 415	106
163 546 416	106
163 546 417	106
163 546 418	106
163 546 419	106

Code	Page
163 546 420	106
163 546 601	113
163 546 602	113
163 546 603	113
163 546 604	113
163 546 605	113
163 546 606	113
163 546 607	113
163 546 608	113
163 546 609	113
163 546 610	113
163 546 611	113
163 546 612	113
163 546 613	113
163 546 614	113
163 546 615	113
163 546 616	113
163 546 617	113
163 546 618	113
163 546 619	113
163 546 620	113
163 546 692	115
163 546 693	115
163 546 694	115
163 546 695	115
163 546 696	115
163 546 697	115
163 546 698	115
163 546 699	115
163 546 700	115
163 546 842	116
163 546 843	116
163 546 844	116
163 546 845	116
163 546 846	116
163 546 847	116
163 546 852	116
163 546 853	116
163 546 854	116
163 546 855	116
163 546 856	116
163 546 857	116
1634812231	400
1634812234	403
167 061 013	365
167 061 016	365
167 061 035	364
167 061 036	364
167 061 037	364
167 061 038	364
167 061 039	364
167 061 040	364
167 061 041	364
167 061 054	365
167 061 085	365
167 061 086	365
167 061 087	365
167 061 088	365
167 061 089	365
167 061 090	365
167 061 091	365
167 061 112	365
167 061 114	365
167 061 155	364
167 061 156	364
167 061 157	364
167 061 158	364

Index

Code	Page
167 061 159	364
167 061 160	364
167 061 161	364
167 480 966	393
167 482 626	358
167 482 627	358
167 482 628	358
167 482 629	358
167 482 630	358
167 482 631	358
167 482 635	358
167 482 636	358
167 482 637	358
167 482 638	358
167 482 639	358
167 482 640	358
167 482 653	360
167 482 654	360
167 482 655	360
167 482 656	360
167 482 657	360
167 482 658	360
167 482 662	359
167 482 663	359
167 482 664	359
167 482 665	359
167 482 666	359
167 482 667	359
167 482 671	359
167 482 672	359
167 482 673	359
167 482 674	359
167 482 675	359
167 482 676	359
167 482 680	357
167 482 681	357
167 482 682	357
167 482 683	357
167 482 684	357
167 482 685	357
167 482 712	356
167 482 713	356
167 482 714	356
167 482 715	356
167 482 716	356
167 482 717	356
167 482 718	356
167 482 719	356
167 482 720	356
167 482 749	393
167 482 876	411
167 482 877	411
167 482 878	411
167 482 879	411
167 482 880	411
167 482 881	411
167 482 882	414
167 482 883	414
167 482 884	414
167 482 888	411
167 482 889	411
167 482 890	411
167 482 891	411
167 482 892	411
167 482 893	411
167 482 894	414
167 482 895	414

Code	Page
167 482 896	414
167 482 900	346
167 482 901	346
167 482 902	346
167 482 903	346
167 482 904	346
167 482 905	346
167 482 906	346
167 482 907	346
167 482 908	346
167 482 909	346
167 482 911	346
167 482 912	346
167 482 913	346
167 482 914	346
167 482 915	346
167 482 916	346
167 482 917	346
167 482 922	346
167 482 923	346
167 482 924	346
167 482 925	346
167 482 926	346
167 482 927	346
167 482 928	346
167 482 929	346
167 482 930	346
167 482 931	346
167 482 937	347
167 482 938	347
167 482 939	347
167 482 940	347
167 482 941	347
167 482 942	347
167 482 945	347
167 482 946	347
167 482 947	347
167 482 948	347
167 482 949	347
167 482 950	347
167 482 951	347
167 482 952	347
167 482 953	347
167 482 956	348
167 482 957	348
167 482 958	348
167 482 959	348
167 482 960	348
167 482 961	348
167 482 966	347
167 482 967	347
167 482 968	347
167 482 969	347
167 482 970	347
167 482 971	347
167 482 972	347
167 484 065	349
167 484 066	349
167 484 067	349
167 484 068	349
167 484 069	349
167 484 070	349
167 484 071	349
167 484 072	349
167 484 073	349
167 484 076	361
167 484 077	361

Code	Page
167 484 078	361
167 484 079	361
167 484 080	361
167 484 081	361
167 484 082	361
167 484 083	361
167 484 084	361
167 484 088	360
167 484 089	360
167 484 090	360
167 484 091	360
167 484 092	360
167 484 093	360
167 484 094	360
167 484 095	360
167 484 096	360
167 484 100	361
167 484 101	361
167 484 102	361
167 484 103	361
167 484 104	361
167 484 105	361
167 484 110	363
167 484 111	363
167 484 125	411
167 484 126	411
167 484 127	411
167 484 128	411
167 484 129	411
167 484 130	411
167 484 131	414
167 484 132	414
167 484 133	414
167 484 135	411
167 484 136	411
167 484 137	411
167 484 138	411
167 484 139	411
167 484 140	411
167 484 141	414
167 484 142	414
167 484 143	414
167 484 160	348
167 484 161	348
167 484 162	348
167 484 163	348
167 484 164	348
167 484 165	348
167 484 418	348
167 484 419	348
167 484 420	348
167 484 481	414
167 484 482	414
167 484 483	414
167 546 001	203
167 546 002	203
167 546 003	203
167 546 004	203
167 546 005	203
167 546 006	203
167 546 007	203
167 546 008	203
167 546 009	203
167 546 010	203
167 546 011	203
167 546 012	203
167 546 013	203

Index

Code	Page
167 546 014	203
167 546 015	203
167 546 016	203
167 546 017	203
167 546 018	203
167 546 019	203
167 546 020	203
167 546 021	206
167 546 022	206
167 546 023	206
167 546 024	206
167 546 025	206
167 546 026	206
167 546 027	206
167 546 031	206
167 546 032	206
167 546 033	206
167 546 034	206
167 546 035	206
167 546 036	206
167 546 037	206
167 546 041	205
167 546 042	205
167 546 043	205
167 546 044	205
167 546 045	205
167 546 046	205
167 546 047	205
167 546 048	205
167 546 049	205
167 546 050	205
167 546 051	205
167 546 052	205
167 546 053	205
167 546 054	205
167 546 055	205
167 546 056	205
167 546 057	205
167 546 058	205
167 546 059	205
167 546 060	205
167 546 066	208
167 546 067	208
167 546 068	208
167 546 069	208
167 546 070	208
167 546 076	208
167 546 077	208
167 546 078	208
167 546 079	208
167 546 080	208
167 546 126	216
167 546 127	216
167 546 136	216
167 546 137	216
167 546 142	215
167 546 143	215
167 546 144	215
167 546 145	215
167 546 146	215
167 546 147	215
167 546 152	215
167 546 153	215
167 546 154	215
167 546 155	215
167 546 156	215
167 546 157	215

Code	Page
167 546 161	214
167 546 162	214
167 546 163	214
167 546 164	214
167 546 165	214
167 546 166	214
167 546 167	214
167 546 171	214
167 546 172	214
167 546 173	214
167 546 174	214
167 546 175	214
167 546 176	214
167 546 177	214
167 546 182	210
167 546 183	210
167 546 184	210
167 546 185	210
167 546 186	210
167 546 187	210
167 546 192	210
167 546 193	210
167 546 194	210
167 546 195	210
167 546 196	210
167 546 197	210
167 546 262	209
167 546 263	209
167 546 264	209
167 546 265	209
167 546 266	209
167 546 267	209
167 546 272	209
167 546 273	209
167 546 274	209
167 546 275	209
167 546 276	209
167 546 277	209
167 546 282	217
167 546 283	217
167 546 284	217
167 546 285	217
167 546 286	217
167 546 287	217
167 546 288	217
167 546 289	217
167 546 290	217
167 546 292	217
167 546 293	217
167 546 294	217
167 546 295	217
167 546 296	217
167 546 297	217
167 546 298	217
167 546 299	217
167 546 300	217
167 546 308	218
167 546 309	218
167 546 310	218
167 546 318	218
167 546 319	218
167 546 320	218
167 546 321	212
167 546 322	212
167 546 323	212
167 546 324	212
167 546 325	212

Code	Page
167 546 326	212
167 546 327	212
167 546 331	212
167 546 332	212
167 546 333	212
167 546 334	212
167 546 335	212
167 546 336	212
167 546 337	212
167 546 401	204
167 546 402	204
167 546 403	204
167 546 404	204
167 546 405	204
167 546 406	204
167 546 407	204
167 546 408	204
167 546 409	204
167 546 410	204
167 546 411	204
167 546 412	204
167 546 413	204
167 546 414	204
167 546 415	204
167 546 416	204
167 546 417	204
167 546 418	204
167 546 419	204
167 546 420	204
167 546 421	219
167 546 422	219
167 546 423	219
167 546 424	219
167 546 425	219
167 546 426	219
167 546 427	219
167 546 428	219
167 546 429	219
167 546 430	219
167 546 431	219
167 546 432	219
167 546 433	219
167 546 434	219
167 546 435	219
167 546 436	219
167 546 437	219
167 546 438	219
167 546 439	219
167 546 440	219
167 546 442	207
167 546 443	207
167 546 444	207
167 546 445	207
167 546 446	207
167 546 447	207
167 546 448	207
167 546 449	207
167 546 450	207
167 546 452	207
167 546 453	207
167 546 454	207
167 546 455	207
167 546 456	207
167 546 457	207
167 546 458	207
167 546 459	207
167 546 460	207

Index

Code	Page
167 546 462	220
167 546 463	220
167 546 464	220
167 546 465	220
167 546 466	220
167 546 467	220
167 546 468	220
167 546 469	220
167 546 470	220
167 546 472	220
167 546 473	220
167 546 474	220
167 546 475	220
167 546 476	220
167 546 477	220
167 546 478	220
167 546 479	220
167 546 480	220
167 546 601	221
167 546 602	221
167 546 603	221
167 546 604	221
167 546 605	221
167 546 606	221
167 546 607	221
167 546 608	221
167 546 609	221
167 546 610	221
167 546 611	221
167 546 612	221
167 546 613	221
167 546 614	221
167 546 615	221
167 546 616	221
167 546 617	221
167 546 618	221
167 546 619	221
167 546 620	221
167 546 621	222
167 546 622	222
167 546 623	222
167 546 624	222
167 546 625	222
167 546 626	222
167 546 627	222
167 546 628	222
167 546 629	222
167 546 630	222
167 546 631	222
167 546 632	222
167 546 633	222
167 546 634	222
167 546 635	222
167 546 636	222
167 546 637	222
167 546 638	222
167 546 639	222
167 546 640	222
167 546 662	223
167 546 663	223
167 546 664	223
167 546 665	223
167 546 666	223
167 546 667	223
167 546 668	223
167 546 669	223
167 546 670	223

Code	Page
167 546 672	223
167 546 673	223
167 546 674	223
167 546 675	223
167 546 676	223
167 546 677	223
167 546 678	223
167 546 679	223
167 546 680	223
167 546 808	211
167 546 809	211
167 546 810	211
167 546 818	211
167 546 819	211
167 546 820	211
167 546 828	224
167 546 829	224
167 546 830	224
167 546 838	224
167 546 839	224
167 546 840	224
167 546 868	213
167 546 869	213
167 546 870	213
167 546 878	213
167 546 879	213
167 546 880	213
167 546 888	225
167 546 889	225
167 546 890	225
167 546 898	225
167 546 899	225
167 546 900	225
169 480 713	355
169 480 714	355
169 480 715	355
169 480 716	355
169 480 717	355
169 480 718	355
169 480 719	355
169 480 720	355
169 480 721	355
169 480 751	405
169 480 752	405
169 480 753	405
169 480 754	405
169 480 755	405
169 480 756	405
169 480 757	407
169 480 758	407
169 480 759	407
169 480 775	349
169 480 776	349
169 480 777	349
169 480 778	349
169 480 779	349
169 480 780	349
169 480 781	349
169 480 782	349
169 480 783	349
169 480 784	349
169 480 786	350
169 480 787	350
169 480 788	350
169 480 789	350
169 480 790	350
169 480 791	350

Code	Page
169 480 792	350
169 480 800	350
169 480 801	350
169 480 802	350
169 480 803	350
169 480 804	350
169 480 805	350
169 480 806	350
169 480 808	350
169 480 809	350
169 480 900	405
169 480 901	405
169 480 902	405
169 480 903	405
169 480 904	405
169 480 905	405
169 480 906	407
169 480 907	407
169 480 908	407
169 480 925	350
169 480 926	350
169 480 927	350
169 480 928	350
169 480 929	350
169 480 930	350
169 480 931	350
169 546 001	158
169 546 002	158
169 546 003	158
169 546 004	158
169 546 005	158
169 546 006	158
169 546 007	158
169 546 008	158
169 546 009	158
169 546 010	158
169 546 021	160
169 546 022	160
169 546 023	160
169 546 024	160
169 546 025	160
169 546 026	160
169 546 027	160
169 546 061	159
169 546 062	159
169 546 063	159
169 546 064	159
169 546 065	159
169 546 066	159
169 546 067	159
169 546 068	159
169 546 069	159
169 546 070	159
169 546 081	164
169 546 082	164
169 546 083	164
169 546 084	164
169 546 085	164
169 546 086	164
169 546 087	164
169 546 088	164
169 546 089	164
169 546 090	164
169 546 201	162
169 546 202	162
169 546 203	162
169 546 204	162

Index

Code	Page
169 546 205	162
169 546 206	162
169 546 207	162
169 546 209	162
169 546 210	162
169 546 221	165
169 546 222	165
169 546 223	165
169 546 224	165
169 546 225	165
169 546 226	165
169 546 227	165
169 546 229	165
169 546 230	165
169 546 241	163
169 546 242	163
169 546 243	163
169 546 244	163
169 546 245	163
169 546 246	163
169 546 247	163
169 546 249	163
169 546 250	163
169 546 601	166
169 546 602	166
169 546 603	166
169 546 604	166
169 546 605	166
169 546 606	166
169 546 607	166
169 546 608	166
169 546 609	166
169 546 610	166
175 482 937	356
175 482 938	356
175 482 939	356
175 482 940	356
175 482 941	356
175 482 942	356
175 482 963	417
175 482 964	417
175 482 965	417
175 482 966	417
175 482 967	417
175 482 968	417
175 483 025	351
175 483 026	351
175 483 027	351
175 483 028	351
175 483 029	351
175 483 030	351
175 483 031	351
175 483 036	351
175 483 037	351
175 483 038	351
175 483 039	351
175 483 040	351
175 483 041	351
175 483 042	351
175 483 048	351
175 483 049	351
175 483 050	351
175 483 051	351
175 483 052	351
175 483 053	351
175 483 058	352
175 483 059	352

Code	Page
175 483 060	352
175 483 061	352
175 483 062	352
175 483 063	352
175 483 064	352
175 483 275	417
175 483 276	417
175 483 277	417
175 483 278	417
175 483 279	417
175 483 280	417
175 483 285	352
175 483 286	352
175 483 287	352
175 483 288	352
175 483 289	352
175 483 290	352
175 546 011	282
175 546 012	282
175 546 013	282
175 546 014	282
175 546 015	282
175 546 016	282
175 546 017	282
175 546 051	284
175 546 052	284
175 546 053	284
175 546 054	284
175 546 055	284
175 546 056	284
175 546 057	284
175 546 092	285
175 546 093	285
175 546 094	285
175 546 095	285
175 546 096	285
175 546 097	285
175 546 192	287
175 546 193	287
175 546 194	287
175 546 195	287
175 546 196	287
175 546 197	287
175 546 272	286
175 546 273	286
175 546 274	286
175 546 275	286
175 546 276	286
175 546 277	286
175 546 331	289
175 546 332	289
175 546 333	289
175 546 334	289
175 546 335	289
175 546 336	289
175 546 337	289
175 546 411	283
175 546 412	283
175 546 413	283
175 546 414	283
175 546 415	283
175 546 416	283
175 546 417	283
175 546 431	290
175 546 432	290
175 546 433	290
175 546 434	290

Code	Page
175 546 435	290
175 546 436	290
175 546 437	290
175 546 592	288
175 546 593	288
175 546 594	288
175 546 595	288
175 546 596	288
175 546 597	288
175 546 691	291
175 546 692	291
175 546 693	291
175 546 694	291
175 546 695	291
175 546 696	291
175 546 697	291
175 546 752	292
175 546 753	292
175 546 754	292
175 546 755	292
175 546 756	292
175 546 757	292
193 480 086	353
193 480 087	353
193 480 088	353
193 480 102	353
193 480 103	353
193 480 104	353
193 480 105	353
193 480 106	353
193 480 107	353
193 480 152	353
193 480 153	353
193 480 154	353
193 480 155	353
193 480 156	353
193 480 157	353
193 480 158	353
193 480 159	353
193 480 160	353
193 480 168	354
193 480 169	354
193 480 170	354
193 480 175	352
193 480 176	352
193 480 177	352
193 480 178	352
193 480 179	352
193 480 180	352
193 480 181	352
198 000 500	366
198 000 501	366
198 000 586	367
198 000 587	367
198 000 595	366
198 000 596	366
198 000 599	366
198 000 601	366
198 000 602	366
198 150 127	373
198 150 128	373
198 150 129	373
198 150 130	373
198 150 131	373
198 150 132	373
198 150 144	373
198 150 145	373

Index

Code	Page
198 150 146	373
198 150 147	373
198 150 148	373
198 150 149	373
198 150 180	368
198 150 181	368
198 150 182	368
198 150 183	368
198 150 184	368
198 150 185	368
198 150 556	366
198 150 557	366
198 150 558	366
198 150 559	366
198 151 317	369
198 151 426	370
198 800 004	374
198 800 005	374
198 800 006	374
198 800 007	374
198 800 017	374
198 800 018	374
198 800 019	374
198 800 020	374
198 800 034	374
198 800 037	374
198 800 039	374
198 800 040	376
198 800 041	374
198 800 042	376
198 800 043	374
198 800 044	376
198 800 045	374
198 800 046	376
198 800 047	374
198 800 048	376
198 800 050	376
198 800 051	376
198 800 052	374
198 800 054	374
198 800 056	374
198 800 058	374
198 800 060	374
198 800 062	374
198 800 728	374
198 800 729	374
198 800 730	374
198 800 731	374
198 800 732	376
198 800 733	376
198 800 734	376
198 800 735	376
198 800 737	376
198 800 757	374
198 800 758	376
198 811 025	374
198 811 026	374
198 811 027	374
198 811 028	374
198 811 029	374
198 811 030	374
199 107 002	40
199 107 003	40
199 107 004	40
199 107 005	40
199 107 006	40
199 107 007	40

Code	Page
199 107 008	40
199 107 012	40
199 107 013	40
199 107 014	40
199 107 015	40
199 107 016	40
199 107 017	40
199 107 018	40
199 107 022	42
199 107 023	42
199 107 024	42
199 107 025	42
199 107 026	42
199 107 027	42
199 107 028	42
199 107 032	42
199 107 033	42
199 107 034	42
199 107 035	42
199 107 036	42
199 107 037	42
199 107 038	42
199 107 042	41
199 107 043	41
199 107 044	41
199 107 045	41
199 107 046	41
199 107 047	41
199 107 048	41
199 107 052	41
199 107 053	41
199 107 054	41
199 107 055	41
199 107 056	41
199 107 057	41
199 107 058	41
199 107 062	43
199 107 063	43
199 107 064	43
199 107 065	43
199 107 066	43
199 107 067	43
199 107 068	43
199 107 072	43
199 107 073	43
199 107 074	43
199 107 075	43
199 107 076	43
199 107 077	43
199 107 078	43
199 107 082	168
199 107 083	168
199 107 084	168
199 107 085	168
199 107 086	168
199 107 087	168
199 107 088	168
199 107 092	169
199 107 093	169
199 107 094	169
199 107 095	169
199 107 096	169
199 107 097	169
199 107 098	169
199 107 102	118
199 107 103	118
199 107 104	118

Code	Page
199 107 105	118
199 107 106	118
199 107 107	118
199 107 108	118
199 107 112	118
199 107 113	118
199 107 114	118
199 107 115	118
199 107 116	118
199 107 117	118
199 107 118	118
199 107 122	120
199 107 123	120
199 107 124	120
199 107 125	120
199 107 126	120
199 107 127	120
199 107 128	120
199 107 132	120
199 107 133	120
199 107 134	120
199 107 135	120
199 107 136	120
199 107 137	120
199 107 138	120
199 107 142	119
199 107 143	119
199 107 144	119
199 107 145	119
199 107 146	119
199 107 147	119
199 107 148	119
199 107 152	119
199 107 153	119
199 107 154	119
199 107 155	119
199 107 156	119
199 107 157	119
199 107 158	119
199 107 162	121
199 107 163	121
199 107 164	121
199 107 165	121
199 107 166	121
199 107 167	121
199 107 168	121
199 107 172	121
199 107 173	121
199 107 174	121
199 107 175	121
199 107 176	121
199 107 177	121
199 107 178	121
199 107 182	172
199 107 183	172
199 107 184	172
199 107 185	172
199 107 186	172
199 107 187	172
199 107 188	172
199 107 192	173
199 107 193	173
199 107 194	173
199 107 195	173
199 107 196	173
199 107 197	173
199 107 198	173

Index

Code	Page
199 107 402	48
199 107 403	48
199 107 404	48
199 107 405	48
199 107 406	48
199 107 407	48
199 107 408	48
199 107 412	48
199 107 413	48
199 107 414	48
199 107 415	48
199 107 416	48
199 107 417	48
199 107 418	48
199 107 423	298
199 107 424	298
199 107 425	298
199 107 426	298
199 107 427	298
199 107 428	298
199 107 433	299
199 107 434	299
199 107 435	299
199 107 436	299
199 107 437	299
199 107 438	299
199 107 442	49
199 107 443	49
199 107 444	49
199 107 445	49
199 107 446	49
199 107 447	49
199 107 448	49
199 107 452	49
199 107 453	49
199 107 454	49
199 107 455	49
199 107 456	49
199 107 457	49
199 107 458	49
199 107 502	228
199 107 503	228
199 107 504	228
199 107 505	228
199 107 506	228
199 107 507	228
199 107 508	228
199 107 512	228
199 107 513	228
199 107 514	228
199 107 515	228
199 107 516	228
199 107 517	228
199 107 518	228
199 107 522	230
199 107 523	230
199 107 524	230
199 107 525	230
199 107 526	230
199 107 527	230
199 107 528	230
199 107 532	230
199 107 533	230
199 107 534	230
199 107 535	230
199 107 536	230
199 107 537	230

Code	Page
199 107 538	230
199 107 542	229
199 107 543	229
199 107 544	229
199 107 545	229
199 107 546	229
199 107 547	229
199 107 548	229
199 107 552	229
199 107 553	229
199 107 554	229
199 107 555	229
199 107 556	229
199 107 557	229
199 107 558	229
199 107 562	231
199 107 563	231
199 107 564	231
199 107 565	231
199 107 566	231
199 107 567	231
199 107 568	231
199 107 572	231
199 107 573	231
199 107 574	231
199 107 575	231
199 107 576	231
199 107 577	231
199 107 578	231
199 107 583	232
199 107 584	232
199 107 585	232
199 107 586	232
199 107 587	232
199 107 588	232
199 107 593	232
199 107 594	232
199 107 595	232
199 107 596	232
199 107 597	232
199 107 598	232
199 107 603	46
199 107 604	46
199 107 605	46
199 107 606	46
199 107 607	46
199 107 608	46
199 107 613	46
199 107 614	46
199 107 615	46
199 107 616	46
199 107 617	46
199 107 618	46
199 107 622	44
199 107 623	44
199 107 624	44
199 107 625	44
199 107 626	44
199 107 627	44
199 107 628	44
199 107 632	44
199 107 633	44
199 107 634	44
199 107 635	44
199 107 636	44
199 107 637	44
199 107 638	44

Code	Page
199 107 643	47
199 107 644	47
199 107 645	47
199 107 646	47
199 107 647	47
199 107 648	47
199 107 653	47
199 107 654	47
199 107 655	47
199 107 656	47
199 107 657	47
199 107 658	47
199 107 662	45
199 107 663	45
199 107 664	45
199 107 665	45
199 107 666	45
199 107 667	45
199 107 668	45
199 107 672	45
199 107 673	45
199 107 674	45
199 107 675	45
199 107 676	45
199 107 677	45
199 107 678	45
199 107 682	170
199 107 683	170
199 107 684	170
199 107 685	170
199 107 686	170
199 107 687	170
199 107 688	170
199 107 692	171
199 107 693	171
199 107 694	171
199 107 695	171
199 107 696	171
199 107 697	171
199 107 698	171
199 107 702	122
199 107 703	122
199 107 704	122
199 107 705	122
199 107 706	122
199 107 707	122
199 107 708	122
199 107 712	122
199 107 713	122
199 107 714	122
199 107 715	122
199 107 716	122
199 107 717	122
199 107 718	122
199 107 742	123
199 107 743	123
199 107 744	123
199 107 745	123
199 107 746	123
199 107 747	123
199 107 748	123
199 107 752	123
199 107 753	123
199 107 754	123
199 107 755	123
199 107 756	123
199 107 757	123

Index

Code	Page
199 107 758	123
199 107 783	233
199 107 784	233
199 107 785	233
199 107 786	233
199 107 787	233
199 107 788	233
199 107 793	233
199 107 794	233
199 107 795	233
199 107 796	233
199 107 797	233
199 107 798	233
199 107 802	294
199 107 803	294
199 107 804	294
199 107 805	294
199 107 806	294
199 107 807	294
199 107 808	294
199 107 812	296
199 107 813	296
199 107 814	296
199 107 815	296
199 107 816	296
199 107 817	296
199 107 818	296
199 107 822	295
199 107 823	295
199 107 824	295
199 107 825	295
199 107 826	295
199 107 827	295
199 107 828	295
199 107 832	297
199 107 833	297
199 107 834	297
199 107 835	297
199 107 836	297
199 107 837	297
199 107 838	297
199 107 843	300
199 107 844	300
199 107 845	300
199 107 846	300
199 107 847	300
199 107 848	300
199 107 853	301
199 107 854	301
199 107 855	301
199 107 856	301
199 107 857	301
199 107 858	301
199 130 002	50
199 130 003	50
199 130 004	50
199 130 005	50
199 130 006	50
199 130 007	50
199 130 008	50
199 130 009	50
199 130 010	50
199 130 011	50
199 130 012	50
199 130 013	50
199 130 014	50
199 130 015	50

Code	Page
199 130 016	50
199 130 017	50
199 130 018	50
199 130 019	50
199 130 020	50
199 130 021	50
199 130 022	52
199 130 023	52
199 130 024	52
199 130 025	52
199 130 026	52
199 130 027	52
199 130 028	52
199 130 029	52
199 130 030	52
199 130 031	52
199 130 032	52
199 130 033	52
199 130 034	52
199 130 035	52
199 130 036	52
199 130 037	52
199 130 038	52
199 130 039	52
199 130 040	52
199 130 041	52
199 130 042	51
199 130 043	51
199 130 044	51
199 130 045	51
199 130 046	51
199 130 047	51
199 130 048	51
199 130 049	51
199 130 050	51
199 130 051	51
199 130 052	51
199 130 053	51
199 130 054	51
199 130 055	51
199 130 056	51
199 130 057	51
199 130 058	51
199 130 059	51
199 130 060	51
199 130 061	51
199 130 062	53
199 130 063	53
199 130 064	53
199 130 065	53
199 130 066	53
199 130 067	53
199 130 068	53
199 130 069	53
199 130 070	53
199 130 071	53
199 130 072	53
199 130 073	53
199 130 074	53
199 130 075	53
199 130 076	53
199 130 077	53
199 130 078	53
199 130 079	53
199 130 080	53
199 130 081	53
199 130 103	56

Code	Page
199 130 104	56
199 130 105	56
199 130 106	56
199 130 107	56
199 130 108	56
199 130 113	56
199 130 114	56
199 130 115	56
199 130 116	56
199 130 117	56
199 130 118	56
199 130 122	54
199 130 123	54
199 130 124	54
199 130 125	54
199 130 126	54
199 130 127	54
199 130 128	54
199 130 129	54
199 130 130	54
199 130 131	54
199 130 132	54
199 130 133	54
199 130 134	54
199 130 135	54
199 130 136	54
199 130 137	54
199 130 138	54
199 130 139	54
199 130 140	54
199 130 141	54
199 130 143	57
199 130 144	57
199 130 145	57
199 130 146	57
199 130 147	57
199 130 148	57
199 130 153	57
199 130 154	57
199 130 155	57
199 130 156	57
199 130 157	57
199 130 158	57
199 130 162	55
199 130 163	55
199 130 164	55
199 130 165	55
199 130 166	55
199 130 167	55
199 130 168	55
199 130 169	55
199 130 170	55
199 130 171	55
199 130 172	55
199 130 173	55
199 130 174	55
199 130 175	55
199 130 176	55
199 130 177	55
199 130 178	55
199 130 179	55
199 130 180	55
199 130 181	55
199 130 182	128
199 130 183	128
199 130 184	128
199 130 185	128

Index

Code	Page
199 130 186	128
199 130 187	128
199 130 188	128
199 130 189	128
199 130 190	128
199 130 191	128
199 130 192	128
199 130 193	128
199 130 194	128
199 130 195	128
199 130 196	128
199 130 197	128
199 130 198	128
199 130 199	128
199 130 200	128
199 130 201	128
199 130 202	129
199 130 203	129
199 130 204	129
199 130 205	129
199 130 206	129
199 130 207	129
199 130 208	129
199 130 209	129
199 130 210	129
199 130 211	129
199 130 212	129
199 130 213	129
199 130 214	129
199 130 215	129
199 130 216	129
199 130 217	129
199 130 218	129
199 130 219	129
199 130 220	129
199 130 221	129
199 130 402	124
199 130 403	124
199 130 404	124
199 130 405	124
199 130 406	124
199 130 407	124
199 130 408	124
199 130 409	124
199 130 410	124
199 130 411	124
199 130 412	124
199 130 413	124
199 130 414	124
199 130 415	124
199 130 416	124
199 130 417	124
199 130 418	124
199 130 419	124
199 130 420	124
199 130 421	124
199 130 422	126
199 130 423	126
199 130 424	126
199 130 425	126
199 130 426	126
199 130 427	126
199 130 428	126
199 130 429	126
199 130 430	126
199 130 431	126
199 130 432	126

Code	Page
199 130 433	126
199 130 434	126
199 130 435	126
199 130 436	126
199 130 437	126
199 130 438	126
199 130 439	126
199 130 440	126
199 130 441	126
199 130 442	125
199 130 443	125
199 130 444	125
199 130 445	125
199 130 446	125
199 130 447	125
199 130 448	125
199 130 449	125
199 130 450	125
199 130 451	125
199 130 452	125
199 130 453	125
199 130 454	125
199 130 455	125
199 130 456	125
199 130 457	125
199 130 458	125
199 130 459	125
199 130 460	125
199 130 461	125
199 130 462	127
199 130 463	127
199 130 464	127
199 130 465	127
199 130 466	127
199 130 467	127
199 130 468	127
199 130 469	127
199 130 470	127
199 130 471	127
199 130 472	127
199 130 473	127
199 130 474	127
199 130 475	127
199 130 476	127
199 130 477	127
199 130 478	127
199 130 479	127
199 130 480	127
199 130 481	127
199 130 702	174
199 130 703	174
199 130 704	174
199 130 705	174
199 130 706	174
199 130 707	174
199 130 708	174
199 130 709	174
199 130 710	174
199 130 711	174
199 130 722	176
199 130 723	176
199 130 724	176
199 130 725	176
199 130 726	176
199 130 727	176
199 130 728	176
199 130 742	175

Code	Page
199 130 743	175
199 130 744	175
199 130 745	175
199 130 746	175
199 130 747	175
199 130 748	175
199 130 749	175
199 130 750	175
199 130 751	175
199 130 762	177
199 130 763	177
199 130 764	177
199 130 765	177
199 130 766	177
199 130 767	177
199 130 768	177
199 131 002	234
199 131 003	234
199 131 004	234
199 131 005	234
199 131 006	234
199 131 007	234
199 131 008	234
199 131 009	234
199 131 010	234
199 131 011	234
199 131 012	234
199 131 013	234
199 131 014	234
199 131 015	234
199 131 016	234
199 131 017	234
199 131 018	234
199 131 019	234
199 131 020	234
199 131 021	234
199 131 022	236
199 131 023	236
199 131 024	236
199 131 025	236
199 131 026	236
199 131 027	236
199 131 028	236
199 131 029	236
199 131 030	236
199 131 031	236
199 131 032	236
199 131 033	236
199 131 034	236
199 131 035	236
199 131 036	236
199 131 037	236
199 131 038	236
199 131 039	236
199 131 040	236
199 131 041	236
199 131 042	235
199 131 043	235
199 131 044	235
199 131 045	235
199 131 046	235
199 131 047	235
199 131 048	235
199 131 049	235
199 131 050	235
199 131 051	235
199 131 052	235

Index

Code	Page
199 131 053	235
199 131 054	235
199 131 055	235
199 131 056	235
199 131 057	235
199 131 058	235
199 131 059	235
199 131 060	235
199 131 061	235
199 131 062	237
199 131 063	237
199 131 064	237
199 131 065	237
199 131 066	237
199 131 067	237
199 131 068	237
199 131 069	237
199 131 070	237
199 131 071	237
199 131 072	237
199 131 073	237
199 131 074	237
199 131 075	237
199 131 076	237
199 131 077	237
199 131 078	237
199 131 079	237
199 131 080	237
199 131 081	237
199 131 083	238
199 131 084	238
199 131 085	238
199 131 086	238
199 131 087	238
199 131 088	238
199 131 093	238
199 131 094	238
199 131 095	238
199 131 096	238
199 131 097	238
199 131 098	238
199 131 103	239
199 131 104	239
199 131 105	239
199 131 106	239
199 131 107	239
199 131 108	239
199 131 113	239
199 131 114	239
199 131 115	239
199 131 116	239
199 131 117	239
199 131 118	239
199 131 129	244
199 131 130	244
199 131 131	244
199 131 139	244
199 131 140	244
199 131 141	244
199 131 149	245
199 131 150	245
199 131 151	245
199 131 159	245
199 131 160	245
199 131 161	245
199 131 329	240
199 131 330	240

Code	Page
199 131 331	240
199 131 339	240
199 131 340	240
199 131 341	240
199 131 369	241
199 131 370	241
199 131 371	241
199 131 379	241
199 131 380	241
199 131 381	241
199 131 529	246
199 131 530	246
199 131 531	246
199 131 539	246
199 131 540	246
199 131 541	246
199 131 549	247
199 131 550	247
199 131 551	247
199 131 559	247
199 131 560	247
199 131 561	247
199 131 729	242
199 131 730	242
199 131 731	242
199 131 739	242
199 131 740	242
199 131 741	242
199 131 769	243
199 131 770	243
199 131 771	243
199 131 779	243
199 131 780	243
199 131 781	243
199 132 012	302
199 132 013	302
199 132 014	302
199 132 015	302
199 132 016	302
199 132 017	302
199 132 018	302
199 132 032	304
199 132 033	304
199 132 034	304
199 132 035	304
199 132 036	304
199 132 037	304
199 132 038	304
199 132 052	303
199 132 053	303
199 132 054	303
199 132 055	303
199 132 056	303
199 132 057	303
199 132 058	303
199 132 072	305
199 132 073	305
199 132 074	305
199 132 075	305
199 132 076	305
199 132 077	305
199 132 078	305
199 132 083	308
199 132 084	308
199 132 085	308
199 132 086	308
199 132 087	308

Code	Page
199 132 088	308
199 132 093	309
199 132 094	309
199 132 095	309
199 132 096	309
199 132 097	309
199 132 098	309
199 132 113	306
199 132 114	306
199 132 115	306
199 132 116	306
199 132 117	306
199 132 118	306
199 132 153	307
199 132 154	307
199 132 155	307
199 132 156	307
199 132 157	307
199 132 158	307
199 134 002	60
199 134 003	60
199 134 004	60
199 134 005	60
199 134 006	60
199 134 007	60
199 134 008	60
199 134 009	60
199 134 010	60
199 134 011	60
199 134 012	60
199 134 013	60
199 134 014	60
199 134 015	60
199 134 016	60
199 134 017	60
199 134 018	60
199 134 019	60
199 134 020	60
199 134 021	60
199 134 042	61
199 134 043	61
199 134 044	61
199 134 045	61
199 134 046	61
199 134 047	61
199 134 048	61
199 134 049	61
199 134 050	61
199 134 051	61
199 134 052	61
199 134 053	61
199 134 054	61
199 134 055	61
199 134 056	61
199 134 057	61
199 134 058	61
199 134 059	61
199 134 060	61
199 134 061	61
199 134 349	58
199 134 350	58
199 134 351	58
199 134 359	58
199 134 360	58
199 134 361	58
199 134 369	59
199 134 370	59

Index

Code	Page
199 134 371	59
199 134 379	59
199 134 380	59
199 134 381	59
199 134 489	130
199 134 490	130
199 134 491	130
199 134 499	130
199 134 500	130
199 134 501	130
199 134 509	131
199 134 510	131
199 134 511	131
199 134 519	131
199 134 520	131
199 134 521	131
199 134 782	178
199 134 783	178
199 134 784	178
199 134 785	178
199 134 786	178
199 134 787	178
199 134 788	178
199 134 789	178
199 134 790	178
199 134 791	178
199 134 822	179
199 134 823	179
199 134 824	179
199 134 825	179
199 134 826	179
199 134 827	179
199 134 828	179
199 134 829	179
199 134 830	179
199 134 831	179
199 190 080	370
199 190 081	371
199 190 082	370
199 190 083	370
199 190 084	371
199 190 085	369
199 190 086	369
199 190 087	369
199 190 092	369
199 190 093	371
199 190 094	372
199 190 095	371
199 190 096	372
199 190 097	372
199 190 099	370
199 190 100	371
199 190 101	371
199 190 275	378
199 190 281	378
199 190 282	379
199 190 283	379
199 190 284	379
199 190 285	379
199 190 286	380
199 190 287	380
199 190 302	388
199 190 303	388
199 190 304	388
199 190 348	381
199 190 349	381
199 190 350	381

Code	Page
199 190 351	381
199 190 357	388
199 190 358	388
199 190 359	388
199 190 360	388
199 190 361	388
199 190 378	388
199 190 379	388
199 190 423	382
199 190 424	382
199 190 425	383
199 190 426	382
199 190 427	384
199 190 428	384
199 190 429	384
199 190 430	383
199 190 431	383
199 190 432	384
199 190 433	384
199 190 434	384
199 190 435	382
199 190 451	389
199 190 463	389
199 190 498	385
199 190 499	385
199 190 500	385
199 190 501	385
199 190 510	385
199 190 511	385
199 190 512	385
199 190 513	385
199 190 518	386
199 190 519	386
199 190 520	386
199 190 521	386
199 190 522	386
199 190 523	386
199 190 532	387
199 190 533	387
199 190 534	387
199 190 535	387
199 190 540	387
199 190 541	387
199 190 542	387
199 190 543	387
199 190 544	387
199 190 545	387
199 190 546	386
199 190 547	386
199 190 554	387
199 190 555	387
199 190 560	389
199 190 561	386
199 190 562	389
199 230 002	65
199 230 003	65
199 230 004	65
199 230 005	65
199 230 006	65
199 230 007	65
199 230 008	65
199 230 012	65
199 230 013	65
199 230 014	65
199 230 015	65
199 230 016	65
199 230 017	65

Code	Page
199 230 018	65
199 230 022	68
199 230 023	68
199 230 024	68
199 230 025	68
199 230 026	68
199 230 027	68
199 230 028	68
199 230 032	68
199 230 033	68
199 230 034	68
199 230 035	68
199 230 036	68
199 230 037	68
199 230 038	68
199 230 042	66
199 230 043	66
199 230 044	66
199 230 045	66
199 230 046	66
199 230 047	66
199 230 048	66
199 230 052	66
199 230 053	66
199 230 054	66
199 230 055	66
199 230 056	66
199 230 057	66
199 230 058	66
199 230 062	69
199 230 063	69
199 230 064	69
199 230 065	69
199 230 066	69
199 230 067	69
199 230 068	69
199 230 072	69
199 230 073	69
199 230 074	69
199 230 075	69
199 230 076	69
199 230 077	69
199 230 078	69
199 230 082	67
199 230 083	67
199 230 084	67
199 230 085	67
199 230 086	67
199 230 087	67
199 230 088	67
199 230 092	67
199 230 093	67
199 230 094	67
199 230 095	67
199 230 096	67
199 230 097	67
199 230 098	67
199 230 102	70
199 230 103	70
199 230 104	70
199 230 105	70
199 230 106	70
199 230 107	70
199 230 108	70
199 230 112	70
199 230 113	70
199 230 114	70

Index

Code	Page
199 230 115	70
199 230 116	70
199 230 117	70
199 230 118	70
199 230 122	77
199 230 123	77
199 230 124	77
199 230 125	77
199 230 126	77
199 230 127	77
199 230 128	77
199 230 129	77
199 230 130	77
199 230 131	77
199 230 132	77
199 230 133	77
199 230 134	77
199 230 135	77
199 230 136	77
199 230 137	77
199 230 138	77
199 230 139	77
199 230 140	77
199 230 141	77
199 230 142	80
199 230 143	80
199 230 144	80
199 230 145	80
199 230 146	80
199 230 147	80
199 230 148	80
199 230 149	80
199 230 150	80
199 230 151	80
199 230 152	80
199 230 153	80
199 230 154	80
199 230 155	80
199 230 156	80
199 230 157	80
199 230 158	80
199 230 159	80
199 230 160	80
199 230 161	80
199 230 162	78
199 230 163	78
199 230 164	78
199 230 165	78
199 230 166	78
199 230 167	78
199 230 168	78
199 230 169	78
199 230 170	78
199 230 171	78
199 230 172	78
199 230 173	78
199 230 174	78
199 230 175	78
199 230 176	78
199 230 177	78
199 230 178	78
199 230 179	78
199 230 180	78
199 230 181	78
199 230 182	81
199 230 183	81
199 230 184	81

Code	Page
199 230 185	81
199 230 186	81
199 230 187	81
199 230 188	81
199 230 189	81
199 230 190	81
199 230 191	81
199 230 192	81
199 230 193	81
199 230 194	81
199 230 195	81
199 230 196	81
199 230 197	81
199 230 198	81
199 230 199	81
199 230 200	81
199 230 201	81
199 230 202	79
199 230 203	79
199 230 204	79
199 230 205	79
199 230 206	79
199 230 207	79
199 230 208	79
199 230 209	79
199 230 210	79
199 230 211	79
199 230 212	79
199 230 213	79
199 230 214	79
199 230 215	79
199 230 216	79
199 230 217	79
199 230 218	79
199 230 219	79
199 230 220	79
199 230 221	79
199 230 222	82
199 230 223	82
199 230 224	82
199 230 225	82
199 230 226	82
199 230 227	82
199 230 228	82
199 230 229	82
199 230 230	82
199 230 231	82
199 230 232	82
199 230 233	82
199 230 234	82
199 230 235	82
199 230 236	82
199 230 237	82
199 230 238	82
199 230 239	82
199 230 240	82
199 230 241	82
199 230 243	74
199 230 244	74
199 230 245	74
199 230 246	74
199 230 247	74
199 230 248	74
199 230 253	74
199 230 254	74
199 230 255	74
199 230 256	74

Code	Page
199 230 257	74
199 230 258	74
199 230 263	75
199 230 264	75
199 230 265	75
199 230 266	75
199 230 267	75
199 230 268	75
199 230 273	75
199 230 274	75
199 230 275	75
199 230 276	75
199 230 277	75
199 230 278	75
199 230 283	76
199 230 284	76
199 230 285	76
199 230 286	76
199 230 287	76
199 230 288	76
199 230 293	76
199 230 294	76
199 230 295	76
199 230 296	76
199 230 297	76
199 230 298	76
199 230 303	86
199 230 304	86
199 230 305	86
199 230 306	86
199 230 307	86
199 230 308	86
199 230 313	86
199 230 314	86
199 230 315	86
199 230 316	86
199 230 317	86
199 230 318	86
199 230 323	87
199 230 324	87
199 230 325	87
199 230 326	87
199 230 327	87
199 230 328	87
199 230 333	87
199 230 334	87
199 230 335	87
199 230 336	87
199 230 337	87
199 230 338	87
199 230 343	88
199 230 344	88
199 230 345	88
199 230 346	88
199 230 347	88
199 230 348	88
199 230 353	88
199 230 354	88
199 230 355	88
199 230 356	88
199 230 357	88
199 230 358	88
199 230 362	71
199 230 363	71
199 230 364	71
199 230 365	71
199 230 366	71

Index

Code	Page
199 230 367	71
199 230 368	71
199 230 372	71
199 230 373	71
199 230 374	71
199 230 375	71
199 230 376	71
199 230 377	71
199 230 378	71
199 230 382	72
199 230 383	72
199 230 384	72
199 230 385	72
199 230 386	72
199 230 387	72
199 230 388	72
199 230 392	72
199 230 393	72
199 230 394	72
199 230 395	72
199 230 396	72
199 230 397	72
199 230 398	72
199 230 402	135
199 230 403	135
199 230 404	135
199 230 405	135
199 230 406	135
199 230 407	135
199 230 408	135
199 230 412	135
199 230 413	135
199 230 414	135
199 230 415	135
199 230 416	135
199 230 417	135
199 230 418	135
199 230 422	138
199 230 423	138
199 230 424	138
199 230 425	138
199 230 426	138
199 230 427	138
199 230 428	138
199 230 432	138
199 230 433	138
199 230 434	138
199 230 435	138
199 230 436	138
199 230 437	138
199 230 438	138
199 230 442	136
199 230 443	136
199 230 444	136
199 230 445	136
199 230 446	136
199 230 447	136
199 230 448	136
199 230 452	136
199 230 453	136
199 230 454	136
199 230 455	136
199 230 456	136
199 230 457	136
199 230 458	136
199 230 462	139
199 230 463	139

Code	Page
199 230 464	139
199 230 465	139
199 230 466	139
199 230 467	139
199 230 468	139
199 230 472	139
199 230 473	139
199 230 474	139
199 230 475	139
199 230 476	139
199 230 477	139
199 230 478	139
199 230 482	137
199 230 483	137
199 230 484	137
199 230 485	137
199 230 486	137
199 230 487	137
199 230 488	137
199 230 492	137
199 230 493	137
199 230 494	137
199 230 495	137
199 230 496	137
199 230 497	137
199 230 498	137
199 230 502	140
199 230 503	140
199 230 504	140
199 230 505	140
199 230 506	140
199 230 507	140
199 230 508	140
199 230 512	140
199 230 513	140
199 230 514	140
199 230 515	140
199 230 516	140
199 230 517	140
199 230 518	140
199 230 522	144
199 230 523	144
199 230 524	144
199 230 525	144
199 230 526	144
199 230 527	144
199 230 528	144
199 230 529	144
199 230 530	144
199 230 531	144
199 230 532	144
199 230 533	144
199 230 534	144
199 230 535	144
199 230 536	144
199 230 537	144
199 230 538	144
199 230 539	144
199 230 540	144
199 230 541	144
199 230 542	147
199 230 543	147
199 230 544	147
199 230 545	147
199 230 546	147
199 230 547	147
199 230 548	147

Code	Page
199 230 549	147
199 230 550	147
199 230 551	147
199 230 552	147
199 230 553	147
199 230 554	147
199 230 555	147
199 230 556	147
199 230 557	147
199 230 558	147
199 230 559	147
199 230 560	147
199 230 561	147
199 230 562	145
199 230 563	145
199 230 564	145
199 230 565	145
199 230 566	145
199 230 567	145
199 230 568	145
199 230 569	145
199 230 570	145
199 230 571	145
199 230 572	145
199 230 573	145
199 230 574	145
199 230 575	145
199 230 576	145
199 230 577	145
199 230 578	145
199 230 579	145
199 230 580	145
199 230 581	145
199 230 582	148
199 230 583	148
199 230 584	148
199 230 585	148
199 230 586	148
199 230 587	148
199 230 588	148
199 230 589	148
199 230 590	148
199 230 591	148
199 230 592	148
199 230 593	148
199 230 594	148
199 230 595	148
199 230 596	148
199 230 597	148
199 230 598	148
199 230 599	148
199 230 600	148
199 230 601	148
199 230 602	146
199 230 603	146
199 230 604	146
199 230 605	146
199 230 606	146
199 230 607	146
199 230 608	146
199 230 609	146
199 230 610	146
199 230 611	146
199 230 612	146
199 230 613	146
199 230 614	146
199 230 615	146

Index

Code	Page
199 230 616	146
199 230 617	146
199 230 618	146
199 230 619	146
199 230 620	146
199 230 621	146
199 230 622	149
199 230 623	149
199 230 624	149
199 230 625	149
199 230 626	149
199 230 627	149
199 230 628	149
199 230 629	149
199 230 630	149
199 230 631	149
199 230 632	149
199 230 633	149
199 230 634	149
199 230 635	149
199 230 636	149
199 230 637	149
199 230 638	149
199 230 639	149
199 230 640	149
199 230 641	149
199 230 642	73
199 230 643	73
199 230 644	73
199 230 645	73
199 230 646	73
199 230 647	73
199 230 648	73
199 230 652	73
199 230 653	73
199 230 654	73
199 230 655	73
199 230 656	73
199 230 657	73
199 230 658	73
199 230 662	83
199 230 663	83
199 230 664	83
199 230 665	83
199 230 666	83
199 230 667	83
199 230 668	83
199 230 669	83
199 230 670	83
199 230 671	83
199 230 672	83
199 230 673	83
199 230 674	83
199 230 675	83
199 230 676	83
199 230 677	83
199 230 678	83
199 230 679	83
199 230 680	83
199 230 681	83
199 230 682	84
199 230 683	84
199 230 684	84
199 230 685	84
199 230 686	84
199 230 687	84
199 230 688	84

Code	Page
199 230 689	84
199 230 690	84
199 230 691	84
199 230 692	84
199 230 693	84
199 230 694	84
199 230 695	84
199 230 696	84
199 230 697	84
199 230 698	84
199 230 699	84
199 230 700	84
199 230 701	84
199 230 702	182
199 230 703	182
199 230 704	182
199 230 705	182
199 230 706	182
199 230 707	182
199 230 708	182
199 230 712	85
199 230 713	85
199 230 714	85
199 230 715	85
199 230 716	85
199 230 717	85
199 230 718	85
199 230 719	85
199 230 720	85
199 230 721	85
199 230 722	185
199 230 723	185
199 230 724	185
199 230 725	185
199 230 726	185
199 230 727	185
199 230 728	185
199 230 732	85
199 230 733	85
199 230 734	85
199 230 735	85
199 230 736	85
199 230 737	85
199 230 738	85
199 230 739	85
199 230 740	85
199 230 741	85
199 230 742	183
199 230 743	183
199 230 744	183
199 230 745	183
199 230 746	183
199 230 747	183
199 230 748	183
199 230 752	141
199 230 753	141
199 230 754	141
199 230 755	141
199 230 756	141
199 230 757	141
199 230 758	141
199 230 762	186
199 230 763	186
199 230 764	186
199 230 765	186
199 230 766	186
199 230 767	186

Code	Page
199 230 768	186
199 230 772	141
199 230 773	141
199 230 774	141
199 230 775	141
199 230 776	141
199 230 777	141
199 230 778	141
199 230 782	184
199 230 783	184
199 230 784	184
199 230 785	184
199 230 786	184
199 230 787	184
199 230 788	184
199 230 792	142
199 230 793	142
199 230 794	142
199 230 795	142
199 230 796	142
199 230 797	142
199 230 798	142
199 230 802	187
199 230 803	187
199 230 804	187
199 230 805	187
199 230 806	187
199 230 807	187
199 230 808	187
199 230 812	142
199 230 813	142
199 230 814	142
199 230 815	142
199 230 816	142
199 230 817	142
199 230 818	142
199 230 822	188
199 230 823	188
199 230 824	188
199 230 825	188
199 230 826	188
199 230 827	188
199 230 828	188
199 230 829	188
199 230 830	188
199 230 831	188
199 230 832	143
199 230 833	143
199 230 834	143
199 230 835	143
199 230 836	143
199 230 837	143
199 230 838	143
199 230 842	191
199 230 843	191
199 230 844	191
199 230 845	191
199 230 846	191
199 230 847	191
199 230 848	191
199 230 852	143
199 230 853	143
199 230 854	143
199 230 855	143
199 230 856	143
199 230 857	143
199 230 858	143

Index

Code	Page
199 230 862	189
199 230 863	189
199 230 864	189
199 230 865	189
199 230 866	189
199 230 867	189
199 230 868	189
199 230 869	189
199 230 870	189
199 230 871	189
199 230 872	150
199 230 873	150
199 230 874	150
199 230 875	150
199 230 876	150
199 230 877	150
199 230 878	150
199 230 879	150
199 230 880	150
199 230 881	150
199 230 882	192
199 230 883	192
199 230 884	192
199 230 885	192
199 230 886	192
199 230 887	192
199 230 888	192
199 230 892	150
199 230 893	150
199 230 894	150
199 230 895	150
199 230 896	150
199 230 897	150
199 230 898	150
199 230 899	150
199 230 900	150
199 230 901	150
199 230 902	190
199 230 903	190
199 230 904	190
199 230 905	190
199 230 906	190
199 230 907	190
199 230 908	190
199 230 909	190
199 230 910	190
199 230 911	190
199 230 912	151
199 230 913	151
199 230 914	151
199 230 915	151
199 230 916	151
199 230 917	151
199 230 918	151
199 230 919	151
199 230 920	151
199 230 921	151
199 230 922	193
199 230 923	193
199 230 924	193
199 230 925	193
199 230 926	193
199 230 927	193
199 230 928	193
199 230 932	151
199 230 933	151
199 230 934	151

Code	Page
199 230 935	151
199 230 936	151
199 230 937	151
199 230 938	151
199 230 939	151
199 230 940	151
199 230 941	151
199 230 942	152
199 230 943	152
199 230 944	152
199 230 945	152
199 230 946	152
199 230 947	152
199 230 948	152
199 230 949	152
199 230 950	152
199 230 951	152
199 230 952	152
199 230 953	152
199 230 954	152
199 230 955	152
199 230 956	152
199 230 957	152
199 230 958	152
199 230 959	152
199 230 960	152
199 230 961	152
199 231 002	250
199 231 003	250
199 231 004	250
199 231 005	250
199 231 006	250
199 231 007	250
199 231 008	250
199 231 012	250
199 231 013	250
199 231 014	250
199 231 015	250
199 231 016	250
199 231 017	250
199 231 018	250
199 231 022	253
199 231 023	253
199 231 024	253
199 231 025	253
199 231 026	253
199 231 027	253
199 231 028	253
199 231 032	253
199 231 033	253
199 231 034	253
199 231 035	253
199 231 036	253
199 231 037	253
199 231 038	253
199 231 042	251
199 231 043	251
199 231 044	251
199 231 045	251
199 231 046	251
199 231 047	251
199 231 048	251
199 231 052	251
199 231 053	251
199 231 054	251
199 231 055	251
199 231 056	251

Code	Page
199 231 057	251
199 231 058	251
199 231 062	254
199 231 063	254
199 231 064	254
199 231 065	254
199 231 066	254
199 231 067	254
199 231 068	254
199 231 072	254
199 231 073	254
199 231 074	254
199 231 075	254
199 231 076	254
199 231 077	254
199 231 078	254
199 231 082	252
199 231 083	252
199 231 084	252
199 231 085	252
199 231 086	252
199 231 087	252
199 231 088	252
199 231 092	252
199 231 093	252
199 231 094	252
199 231 095	252
199 231 096	252
199 231 097	252
199 231 098	252
199 231 102	255
199 231 103	255
199 231 104	255
199 231 105	255
199 231 106	255
199 231 107	255
199 231 108	255
199 231 112	255
199 231 113	255
199 231 114	255
199 231 115	255
199 231 116	255
199 231 117	255
199 231 118	255
199 231 122	259
199 231 123	259
199 231 124	259
199 231 125	259
199 231 126	259
199 231 127	259
199 231 128	259
199 231 129	259
199 231 130	259
199 231 131	259
199 231 132	259
199 231 133	259
199 231 134	259
199 231 135	259
199 231 136	259
199 231 137	259
199 231 138	259
199 231 139	259
199 231 140	259
199 231 141	259
199 231 142	262
199 231 143	262
199 231 144	262

Index

Code	Page
199 231 145	262
199 231 146	262
199 231 147	262
199 231 148	262
199 231 149	262
199 231 150	262
199 231 151	262
199 231 152	262
199 231 153	262
199 231 154	262
199 231 155	262
199 231 156	262
199 231 157	262
199 231 158	262
199 231 159	262
199 231 160	262
199 231 161	262
199 231 162	260
199 231 163	260
199 231 164	260
199 231 165	260
199 231 166	260
199 231 167	260
199 231 168	260
199 231 169	260
199 231 170	260
199 231 171	260
199 231 172	260
199 231 173	260
199 231 174	260
199 231 175	260
199 231 176	260
199 231 177	260
199 231 178	260
199 231 179	260
199 231 180	260
199 231 181	260
199 231 182	263
199 231 183	263
199 231 184	263
199 231 185	263
199 231 186	263
199 231 187	263
199 231 188	263
199 231 189	263
199 231 190	263
199 231 191	263
199 231 192	263
199 231 193	263
199 231 194	263
199 231 195	263
199 231 196	263
199 231 197	263
199 231 198	263
199 231 199	263
199 231 200	263
199 231 201	263
199 231 202	261
199 231 203	261
199 231 204	261
199 231 205	261
199 231 206	261
199 231 207	261
199 231 208	261
199 231 209	261
199 231 210	261
199 231 211	261

Code	Page
199 231 212	261
199 231 213	261
199 231 214	261
199 231 215	261
199 231 216	261
199 231 217	261
199 231 218	261
199 231 219	261
199 231 220	261
199 231 221	261
199 231 222	264
199 231 223	264
199 231 224	264
199 231 225	264
199 231 226	264
199 231 227	264
199 231 228	264
199 231 229	264
199 231 230	264
199 231 231	264
199 231 232	264
199 231 233	264
199 231 234	264
199 231 235	264
199 231 236	264
199 231 237	264
199 231 238	264
199 231 239	264
199 231 240	264
199 231 241	264
199 231 243	256
199 231 244	256
199 231 245	256
199 231 246	256
199 231 247	256
199 231 248	256
199 231 253	256
199 231 254	256
199 231 255	256
199 231 256	256
199 231 257	256
199 231 258	256
199 231 263	257
199 231 264	257
199 231 265	257
199 231 266	257
199 231 267	257
199 231 268	257
199 231 273	257
199 231 274	257
199 231 275	257
199 231 276	257
199 231 277	257
199 231 278	257
199 231 283	258
199 231 284	258
199 231 285	258
199 231 286	258
199 231 287	258
199 231 288	258
199 231 293	258
199 231 294	258
199 231 295	258
199 231 296	258
199 231 297	258
199 231 298	258
199 231 329	274

Code	Page
199 231 330	274
199 231 331	274
199 231 339	274
199 231 340	274
199 231 341	274
199 231 349	275
199 231 350	275
199 231 351	275
199 231 359	275
199 231 360	275
199 231 361	275
199 231 369	276
199 231 370	276
199 231 371	276
199 231 379	276
199 231 380	276
199 231 381	276
199 231 423	271
199 231 424	271
199 231 425	271
199 231 426	271
199 231 427	271
199 231 428	271
199 231 433	271
199 231 434	271
199 231 435	271
199 231 436	271
199 231 437	271
199 231 438	271
199 231 443	272
199 231 444	272
199 231 445	272
199 231 446	272
199 231 447	272
199 231 448	272
199 231 453	272
199 231 454	272
199 231 455	272
199 231 456	272
199 231 457	272
199 231 458	272
199 231 463	273
199 231 464	273
199 231 465	273
199 231 466	273
199 231 467	273
199 231 468	273
199 231 473	273
199 231 474	273
199 231 475	273
199 231 476	273
199 231 477	273
199 231 478	273
199 231 729	277
199 231 730	277
199 231 731	277
199 231 739	277
199 231 740	277
199 231 741	277
199 231 749	278
199 231 750	278
199 231 751	278
199 231 759	278
199 231 760	278
199 231 761	278
199 231 769	279
199 231 770	279

Index

Code	Page
199 231 771	279
199 231 779	279
199 231 780	279
199 231 781	279
199 231 839	265
199 231 840	265
199 231 841	265
199 231 849	265
199 231 850	265
199 231 851	265
199 231 859	266
199 231 860	266
199 231 861	266
199 231 869	266
199 231 870	266
199 231 871	266
199 231 879	267
199 231 880	267
199 231 881	267
199 231 889	267
199 231 890	267
199 231 891	267
199 231 939	268
199 231 940	268
199 231 941	268
199 231 949	268
199 231 950	268
199 231 951	268
199 231 959	269
199 231 960	269
199 231 961	269
199 231 969	269
199 231 970	269
199 231 971	269
199 231 979	270
199 231 980	270
199 231 981	270
199 231 989	270
199 231 990	270
199 231 991	270
199 232 003	321
199 232 004	321
199 232 005	321
199 232 006	321
199 232 007	321
199 232 008	321
199 232 012	312
199 232 013	312
199 232 014	312
199 232 015	312
199 232 016	312
199 232 017	312
199 232 018	312
199 232 023	322
199 232 024	322
199 232 025	322
199 232 026	322
199 232 027	322
199 232 028	322
199 232 032	315
199 232 033	315
199 232 034	315
199 232 035	315
199 232 036	315
199 232 037	315
199 232 038	315
199 232 043	323

Code	Page
199 232 044	323
199 232 045	323
199 232 046	323
199 232 047	323
199 232 048	323
199 232 052	313
199 232 053	313
199 232 054	313
199 232 055	313
199 232 056	313
199 232 057	313
199 232 058	313
199 232 063	333
199 232 064	333
199 232 065	333
199 232 066	333
199 232 067	333
199 232 068	333
199 232 072	316
199 232 073	316
199 232 074	316
199 232 075	316
199 232 076	316
199 232 077	316
199 232 078	316
199 232 083	334
199 232 084	334
199 232 085	334
199 232 086	334
199 232 087	334
199 232 088	334
199 232 092	314
199 232 093	314
199 232 094	314
199 232 095	314
199 232 096	314
199 232 097	314
199 232 098	314
199 232 103	335
199 232 104	335
199 232 105	335
199 232 106	335
199 232 107	335
199 232 108	335
199 232 112	317
199 232 113	317
199 232 114	317
199 232 115	317
199 232 116	317
199 232 117	317
199 232 118	317
199 232 132	324
199 232 133	324
199 232 134	324
199 232 135	324
199 232 136	324
199 232 137	324
199 232 138	324
199 232 152	327
199 232 153	327
199 232 154	327
199 232 155	327
199 232 156	327
199 232 157	327
199 232 158	327
199 232 172	325
199 232 173	325

Code	Page
199 232 174	325
199 232 175	325
199 232 176	325
199 232 177	325
199 232 178	325
199 232 192	328
199 232 193	328
199 232 194	328
199 232 195	328
199 232 196	328
199 232 197	328
199 232 198	328
199 232 212	326
199 232 213	326
199 232 214	326
199 232 215	326
199 232 216	326
199 232 217	326
199 232 218	326
199 232 232	329
199 232 233	329
199 232 234	329
199 232 235	329
199 232 236	329
199 232 237	329
199 232 238	329
199 232 713	318
199 232 714	318
199 232 715	318
199 232 716	318
199 232 717	318
199 232 718	318
199 232 753	319
199 232 754	319
199 232 755	319
199 232 756	319
199 232 757	319
199 232 758	319
199 232 793	320
199 232 794	320
199 232 795	320
199 232 796	320
199 232 797	320
199 232 798	320
199 232 833	330
199 232 834	330
199 232 835	330
199 232 836	330
199 232 837	330
199 232 838	330
199 232 873	331
199 232 874	331
199 232 875	331
199 232 876	331
199 232 877	331
199 232 878	331
199 232 913	332
199 232 914	332
199 232 915	332
199 232 916	332
199 232 917	332
199 232 918	332
199 234 002	92
199 234 003	92
199 234 004	92
199 234 005	92
199 234 006	92

Index

Code	Page
199 234 007	92
199 234 008	92
199 234 012	92
199 234 013	92
199 234 014	92
199 234 015	92
199 234 016	92
199 234 017	92
199 234 018	92
199 234 042	93
199 234 043	93
199 234 044	93
199 234 045	93
199 234 046	93
199 234 047	93
199 234 048	93
199 234 052	93
199 234 053	93
199 234 054	93
199 234 055	93
199 234 056	93
199 234 057	93
199 234 058	93
199 234 082	94
199 234 083	94
199 234 084	94
199 234 085	94
199 234 086	94
199 234 087	94
199 234 088	94
199 234 092	94
199 234 093	94
199 234 094	94
199 234 095	94
199 234 096	94
199 234 097	94
199 234 098	94
199 234 122	95
199 234 123	95
199 234 124	95
199 234 125	95
199 234 126	95
199 234 127	95
199 234 128	95
199 234 129	95
199 234 130	95
199 234 131	95
199 234 132	95
199 234 133	95
199 234 134	95
199 234 135	95
199 234 136	95
199 234 137	95
199 234 138	95
199 234 139	95
199 234 140	95
199 234 141	95
199 234 162	96
199 234 163	96
199 234 164	96
199 234 165	96
199 234 166	96
199 234 167	96
199 234 168	96
199 234 169	96
199 234 170	96
199 234 171	96

Code	Page
199 234 172	96
199 234 173	96
199 234 174	96
199 234 175	96
199 234 176	96
199 234 177	96
199 234 178	96
199 234 179	96
199 234 180	96
199 234 181	96
199 234 202	97
199 234 203	97
199 234 204	97
199 234 205	97
199 234 206	97
199 234 207	97
199 234 208	97
199 234 209	97
199 234 210	97
199 234 211	97
199 234 212	97
199 234 213	97
199 234 214	97
199 234 215	97
199 234 216	97
199 234 217	97
199 234 218	97
199 234 219	97
199 234 220	97
199 234 221	97
199 234 469	89
199 234 470	89
199 234 471	89
199 234 479	89
199 234 480	89
199 234 481	89
199 234 489	90
199 234 490	90
199 234 491	90
199 234 499	90
199 234 500	90
199 234 501	90
199 234 509	91
199 234 510	91
199 234 511	91
199 234 519	91
199 234 520	91
199 234 521	91
199 234 609	153
199 234 610	153
199 234 611	153
199 234 619	153
199 234 620	153
199 234 621	153
199 234 629	154
199 234 630	154
199 234 631	154
199 234 639	154
199 234 640	154
199 234 641	154
199 234 649	155
199 234 650	155
199 234 651	155
199 234 659	155
199 234 660	155
199 234 661	155
199 234 702	194

Code	Page
199 234 703	194
199 234 704	194
199 234 705	194
199 234 706	194
199 234 707	194
199 234 708	194
199 234 742	195
199 234 743	195
199 234 744	195
199 234 745	195
199 234 746	195
199 234 747	195
199 234 748	195
199 234 782	196
199 234 783	196
199 234 784	196
199 234 785	196
199 234 786	196
199 234 787	196
199 234 788	196
199 234 822	197
199 234 823	197
199 234 824	197
199 234 825	197
199 234 826	197
199 234 827	197
199 234 828	197
199 234 829	197
199 234 830	197
199 234 831	197
199 234 862	198
199 234 863	198
199 234 864	198
199 234 865	198
199 234 866	198
199 234 867	198
199 234 868	198
199 234 869	198
199 234 870	198
199 234 871	198
199 234 902	199
199 234 903	199
199 234 904	199
199 234 905	199
199 234 906	199
199 234 907	199
199 234 908	199
199 234 909	199
199 234 910	199
199 234 911	199
748 410 003	393
748 410 023	396
748 410 059	393
748 410 062	393
748 410 106	393
748 410 119	396
748 410 151	393
748 410 159	400
748 410 231	393
748 410 254	396
749 410 003	393
749 410 023	396
749 410 059	393
749 410 062	393
749 410 106	393
749 410 119	396
749 410 151	393

Index

Code	Page
749 410 159	400
749 410 231	393
749 410 254	396
749 470 003	417
749 470 059	417
749 470 062	417
749 470 106	417
749 470 151	417
749 470 231	417
800 000 101	21
800 000 102	21
800 000 103	21
800 000 104	21
800 000 105	21
800 000 106	21
800 000 107	21
800 000 111	21
800 000 112	21
800 000 113	21
800 000 114	21
800 000 115	21
800 000 116	21
800 000 117	21
800 000 125	24
800 000 126	24
800 000 127	24
800 000 135	24
800 000 136	24
800 000 137	24
800 000 142	23
800 000 143	23
800 000 144	23
800 000 145	23
800 000 146	23
800 000 147	23
800 000 152	23
800 000 153	23
800 000 154	23
800 000 155	23
800 000 156	23
800 000 157	23
800 000 182	13
800 000 183	13
800 000 184	13
800 000 185	13
800 000 186	13
800 000 187	13
800 000 192	13
800 000 193	13
800 000 194	13
800 000 195	13
800 000 196	13
800 000 197	13
800 000 218	28
800 000 219	28
800 000 220	28
800 000 228	28
800 000 229	28
800 000 230	28
800 000 282	26
800 000 283	26
800 000 284	26
800 000 285	26
800 000 286	26
800 000 287	26
800 000 288	26
800 000 289	26

Code	Page
800 000 290	26
800 000 292	26
800 000 293	26
800 000 294	26
800 000 295	26
800 000 296	26
800 000 297	26
800 000 298	26
800 000 299	26
800 000 300	26
800 000 601	33
800 000 602	33
800 000 603	33
800 000 604	33
800 000 605	33
800 000 606	33
800 000 607	33
800 000 608	33
800 000 609	33
800 000 610	33
800 000 611	33
800 000 612	33
800 000 613	33
800 000 614	33
800 000 615	33
800 000 616	33
800 000 617	33
800 000 618	33
800 000 619	33
800 000 620	33
800 000 621	114
800 000 622	114
800 000 623	114
800 000 624	114
800 000 625	114
800 000 626	114
800 000 627	114
800 000 628	114
800 000 629	114
800 000 630	114
800 000 631	114
800 000 632	114
800 000 633	114
800 000 634	114
800 000 635	114
800 000 636	114
800 000 637	114
800 000 638	114
800 000 639	114
800 000 640	114
800 015 141	161
800 015 142	161
800 015 143	161
800 015 179	161
800 024 832	161
800 024 834	161

General Condition of Supply of Georg Fischer Piping Systems Limited, Schaffhausen

1 General

1.1 These General Conditions shall apply to all Products supplied by Georg Fischer to the Purchaser They shall also apply to all future business even when no express reference is made to them

1.2 Any deviating or supplementary conditions especially Purchaser's general conditions of purchase and verbal agreements shall only be applicable if accepted in writing by Georg Fischer.

1.3 The written form shall be deemed to be fulfilled by all forms of transmission, evidenced in the form of text, such as telefax, e-mail, etc.

2 Tenders

Tenders shall only be binding if they contain a specifically stated period for acceptance.

3 Scope of Delivery

3.1 Georg Fischer's product range is subject to change.

3.2 The confirmation of order shall govern the scope and execution of the contract.

4 Data and Documents

4.1 Technical documents such as drawings, descriptions, illustrations and data on dimensions, performance and weight as well as the reference to standards are for information purposes only. They are not warranted characteristics and are subject to change.

4.2 All technical documents shall remain the exclusive property of Georg Fischer and may only be used for the agreed purposes or as Georg Fischer may consent.

5 Confidentiality, Protection of Personal Data

5.1 Each party shall keep in strict confidence all commercial or technical information relating to the business of the other party, of which it has gained knowledge in the course of its dealing with the other party. Such information shall neither be disclosed to third parties nor used for other purposes than those for which the information has been supplied.

5.2 In the context of the contractual relation with the Purchaser personal data may be processed. The Purchaser agrees to the disclosure of said data to third parties such as foreign subcontractors and suppliers etc.

6 Local Laws and Regulations, Export Controls

6.1 The Purchaser shall bring to the attention of Georg Fischer all local laws and regulations at the place of destination which bear connection with the execution of the contract and the adherence to relevant safety regulations and approval procedures.

6.2 In case of re-exports, Purchaser shall be responsible for compliance with pertinent export control regulations.

7 Price

7.1 Unless agreed otherwise, the prices shall be deemed quoted net ex works (according to Incoterms of the ICC, latest version) including standard packing. All supplementary costs such as the cost of carriage, insurance, export-, transit- and importlicences etc. shall be borne by the Purchaser. The Purchaser shall also bear the costs of all taxes, fees, duties etc. connected with the contract.

7.2 If the costs of packing, carriage, insurance, fees and other supplementary costs are included in the tender price or contract price or are referred to specifically in the tender or confirmation of order, Georg Fischer reserve the right to revise their prices accordingly should any change occur in the relevant tariffs.

8 Terms of Payment

8.1 The Purchaser shall make payment in the manner agreed by the parties without any deductions such as discounts, costs, taxes or dues.

8.2 The Purchaser may only withhold or off-set payments due against counter claims which are either expressly acknowledged by Georg Fischer or finally awarded to the Purchaser.
In particular, payment shall still be made when unessential items are still out-standing provided that the Products already delivered are not rendered unusable as a result.

9 Retention of Title

9.1 The Products shall remain the property of Georg Fischer until the Purchaser shall have settled all claims, present and future, which Georg Fischer may have against him.

9.2 Should the Purchaser resell Products to which title is reserved, in the ordinary course of business, he shall hereby be deemed to have tacitly assigned to Georg Fischer the proceeds deriving from their sale together with all collateral rights, securities and reservations of title until all claims held by Georg Fischer shall have been settled. Until revoked by Georg Fischer, this assignment shall not preclude Purchaser's right to collect the assigned receivables.

9.3 To the extent the value of the Products to which title is reserved together with collateral securities exceeds Georg Fischer's claims against the Purchaser by more than 20%, Georg Fischer shall re-assign the above proceeds to Purchaser at his request.

10 Delivery

10.1 The term of delivery shall commence as soon as the contract has been entered into, all official formalities such as import and payment permits have been obtained and all essential technical issues have been settled. The term of delivery shall be deemed duly observed when, upon its expiry, the Products are ready for despatch.

10.2 Delivery is subject to the following conditions, i.e. the term of delivery shall be reasonably extended:

a) if Georg Fischer are not supplied in time with the information necessary for the execution of the contract or if subsequent changes causing delays are made by the Purchaser.

b) if Georg Fischer are prevented from performing the contract by force majeure. Force majeure shall equally be deemed to be any unforeseeable event beyond Georg Fischer's control which renders Georg Fischer's performance commercially unpractical or impossible, such as delayed or defective supplies from sub contractors labour disputes, governmental orders or regulations, shortages in materials or energy, serious disturbances in Georg Fischer's works, such as the total or partial destruction of plant and equipment or the breakdown of essential facilities, serious disruptions in transport facilities, e.g. impassable roads.
Should the effect of force majeure exceed a period of six months, either party may cancel the contract forthwith.
Georg Fischer shall not be liable for any damage or loss of any kind whatsoever resulting therefrom, any suspension or cancellation being without prejudice to Georg Fischer's right to recover all sums due in respect of consignments delivered and costs incurred to date.

c) if the Purchaser is in delay with the fulfilment of his obligations under the contract, in particular, if he does not adhere to the agreed conditions of payment or if he has failed to timely provide the agreed securities.

10.3 If for reasons attributable to Georg Fischer the agreed term of delivery or a reasonable extension thereof is exceeded, Georg Fischer shall not be deemed in default until the Purchaser has granted to Georg Fischer in writing a reasonable extension thereof of not less than one month which equally is not met.
The Purchaser shall then be entitled to the remedies provided at law, it being however understood that, subject to limitations of Art. 16, damage claims shall be limited to max. 10% of the price of the delayed delivery.

10.4 Part shipments shall be allowed and Georg Fischer shall be entitled to invoice for such partial deliveries.

10.5 If the Purchaser fails to take delivery within a reasonable time of Products notified as ready for despatch, Georg Fischer shall be entitled to store the Products at the Purchaser's expense and risk and to invoice them as delivered. If Purchaser fails to effect payment, Georg Fischer shall be entitled to dispose of the Products.

10.6 Should Purchaser cancel an order without justification and should Georg Fischer not insist on the performance of the contract, Georg Fischer shall be entitled to liquidated damages in the amount of 10% of the contract price, Georg Fischer›s right to prove and claim higher damages remaining reserved. Purchaser shall be entitled to prove, that Georg Fischer has suffered no or a considerably lower damage.

11 Packing

If the Products are provided with additional packing over and above the standard packing, such packing shall be charged additionally.

12 Passing of Risk

12.1 The risk in the Products shall pass to the Purchaser as soon as they have left Georg Fischer's works (EX WORKS, Incoterms ICC, latest version), even if delivery is made carriage-paid, under similar clauses or including installation or when carriage is organized and managed by Georg Fischer.

12.2 If delivery is delayed for reasons beyond Georg Fischer's control, the risk shall pass to the Purchaser when he is notified that the Products are ready for despatch.

13 Carriage and Insurance

13.1 Unless agreed otherwise, the Purchaser shall bear the cost of carriage.

13.2 The Purchaser shall be responsible for transport insurance against damage of whatever kind. Even when such insurance is arranged by Georg Fischer it shall be deemed taken out by the order of and for the account of the Purchaser and at his risk.

13.3 Special requests regarding carriage and insurance shall be communicated to Georg Fischer in due time. Otherwise carriage shall be arranged by Georg Fischer at their discretion, but without responsibility, by the quickest and cheapest method possible.
In case of carriage-paid delivery transport arrangements shall be made by Georg Fischer. If the Purchaser specifies particular requirements, any extra costs involved shall be borne by him.

13.4 In the event of damage or loss of the Products during carriage the Purchaser shall mark the delivery documents accordingly and immediately have the damage ascertained by the carrier. Not readily ascertainable damages sustained during carriage shall be notified to the carrier within six days after receipt of the Products.

14 Inspection, Notification of Defects and Damages

14.1 The Products will be subject to normal inspection by Georg Fischer during manufacture. Additional tests required by the Purchaser shall be agreed upon in writing and shall be charged to the Purchaser.

14.2 It shall be a condition of Georg Fischer's obligation under the warranties stated hereinafter that Georg Fischer be notified in writing by the Purchaser of any purported defect immediately upon discovery. Notice concerning weight, numbers or apparent defects is to be given latest within 30 days from receipt of the Products, notice of other defects immediately latest within 7 working days after discovery, in any event within the agreed warranty period.

14.3 Purchaser shall not dispose of allegedly defective Products until all warranty and/or damage claims are finally settled. At its request, defective Products are to be placed at Georg Fischer's disposal.

14.4 At its request, Georg Fischer shall be given the opportunity to inspect the defect and/or damage, prior to commencement of remedial work, either itself or by third party experts.

15 Warranty

15.1 At the written request of the Purchaser, Georg Fischer undertake to repair or replace at their discretion, as quickly as possible and free of charge all Products supplied which demonstrably suffer from faulty design, materials or workman-ship or from faulty operating or installation instructions.
In order to protect employees from toxic or radioactive substances which may have been transported through defective parts returned to Georg Fischer's sales organisation, said parts must be accompanied by a Material Safety Disclosure Form. The form may be obtained from Georg Fischer's local sales company or via www.piping.georgfischer.com.
Replaced parts shall become property of Georg Fischer.

15.2 For Products which are manufactured to specifications, drawings or patterns supplied by the Purchaser, Georg Fischer's warranty shall be restricted to proper materials and workmanship.

15.3 The Purchaser shall be entitled to cancel the contract or to demand a reduction in the contract price if also a second attempt to repair or replace the Products has failed.

15.4 For Products or essential components manufactured by a third party and supplied by Georg Fischer under this contract, Georg Fischer's warranty is limited to the warranty provided by said third party.

15.5 This warranty shall not apply to damage resulting from normal wear and tear, improper storage and maintenance, failure to observe the operating instructions, overstressing or overloading, unsuitable operating media, unsuitable construction work or unsuitable building ground, improper repairs or alterations by the Purchaser or third parties, the use of other than original spare parts and other reasons beyond Georg Fischer's control.

15.6 No action or claim may be brought by the Purchaser on account of any alleged breach of warranty or any other obligation of Georg Fischer after the expiration of twelve (12) months from receipt of the Products by the end user or at the latest within eighteen (18) months of the Products being despatched by Georg Fischer.

15.7 In case of Products for use in domestic installations or in utilities
- Georg Fischer will assume the costs of dismantling the defective Product and restoring the damaged object as well as, in case of negligence, all other direct damages caused by the defective Product (damage to property and injury to or death of persons) up to CHF 1 000 000 per occurrence.
- the statute of limitations for warranty or damage claims – contrary to Section 15.6 – will be 5 years from the date of installation.

16 Limitation of Liability

All cases of breach of contract and the relevant consequences as well as all rights and claims on the part of the customer, irrespective on what ground they are based, are exhaustively covered by these general conditions of supply. In particular, any claims not expressly mentioned for damages, reduction of price, termination of or withdrawal from the contract are excluded. In no case whatsoever shall the customer be entitled to claim damages other than compensation for costs of remedying defects in the supplies. This in particular refers, but shall not be limited, to loss of production, loss of use, loss of orders, loss of profit and other direct or indirect or consequential damage. This exclusion of liability, however, does not apply to unlawful intent or gross negligence on the part of Georg Fischer and in case of strict liability under applicable product liability statutes, but does apply to unlawful intent or gross negligence of persons employed or appointed by Georg Fischer to perform any of its obligations.

17 Severability

Should any term or clause of these General Conditions in whole or in part be found to be unenforceable or void, all other provisions shall remain in full force and effect and the unenforceable or void provision shall be replaced by a valid provision, which comes closest to the original intention of the unenforceable or invalid provision.

18 Place of Performance and Jurisdiction

18.1 Place of performance for the Products shall be the Georg Fischer works from which the Products are despatched.

18.2 Any civil action based upon any alleged breach of this contract shall be filed and prosecuted exclusively in the courts of Schaffhausen, Switzerland.
Georg Fischer however reserves the right to file actions in any court having jurisdiction over controversies arising out of or in connection with the present contract.

18.3 The contract shall be governed by Swiss law without regard to conflict of law provisions that would require the application of another law.

7/2005

GF Piping Systems → worldwide at home

Our sales companies and representatives
ensure local customer support in over 100 countries.

www.piping.georgfischer.com

The technical data are not binding and
not expressly warranted characteristics
of the goods. They are subject to change.
Our General Conditions of Sale apply.

Adding Quality to People's Lives

Australia
George Fischer Pty Ltd
Unit 1, 100 Belmore Road
Riverwood NSW 2210 Australia
Phone +61(0)2/9502 8000
australia.ps@georgfischer.com
www.georgefischer.com.au

Austria
Georg Fischer
Rohrleitungssysteme GmbH
3130 Herzogenburg
Phone +43(0)2782/856 43-0
austria.ps@georgfischer.com
www.georgfischer.at

Belgium / Luxembourg
Georg Fischer NV/SA
1070 Bruxelles/Brüssel
Phone +32(0)2/556 40 20
be.ps@georgfischer.com
www.georgfischer.be

Brazil
George Fischer Ltda
04795-100 São Paulo
Phone +55(0)11/5687 1311
br.ps@georgfischer.com

China
Georg Fischer
Piping Systems Ltd Shanghai
Pudong, Shanghai 201319
Phone +86(0)21/58 13 33 33
china.ps@georgfischer.com
www.cn.piping.georgfischer.com

Denmark / Iceland
Georg Fischer A/S
2630 Taastrup
Phone +45 (0)70 22 19 75
info.dk.ps@georgfischer.com
www.georgfischer.dk

France
Georg Fischer SAS
Bâtiment Le Rabelais Paris Nord 2
22 Avenue des Nations
BP 88026 Villepinte
95932 Roissy Charles de Gaulle Cedex
Phone +33(0)1 41 84 68 84
fr.ps@georgfischer.com
www.georgefischer.fr

Germany
Georg Fischer GmbH
73095 Albershausen
Phone +49(0)7161/302-0
info.de.ps@georgfischer.com
www.vgd.georgfischer.de

India
Georg Fischer Piping Systems Ltd
400 076 Mumbai
Phone +91 224007 2001
in.ps@georgfischer.com
www.georgfischer.in

Italy
Georg Fischer S.p.A.
20063 Cernusco S/N (MI)
Phone +3902/921 861
it.ps@georgfischer.com
www.georgfischer.it

Japan
Georg Fischer Ltd
556-0011 Osaka,
Phone +81(0)6/6635 2691
jp.ps@georgfischer.com
www.georgfischer.jp

Korea
Georg Fischer Piping Systems
#902 Ace Techno-Tower III
197-48, Guro-dong, Guro-gu
Seoul 152-050 Korea
Phone +82 2 851 3861/3862
Fax +82 2 851 3844
kor.ps@georgfischer.com

Malaysia
Georg Fischer (M) Sdn. Bhd.
47500 Subang Jaya
Phone +60 (0)3-8024 7879
conne.kong@georgefischer.com.my

Middle East
George Fischer Piping Systems
Dubai, United Arab Emirates
Phone +971 4 289 41 20
gfdubai@emirates.net.ae
www.piping.georgfischer.com

Netherlands
Georg Fischer N.V.
8161 PA Epe
Phone +31(0)578/678 222
nl.ps@georgfischer.com
www.georgfischer.nl

Norway
Georg Fischer AS
1351 Rud
Phone +47(0)67 18 29 00
no.ps@georgfischer.com
www.georgfischer.no

Poland
Georg Fischer Sp. z o.o.
02-226 Warszawa
Phone +48(0)22/313 10 50
poland.ps@georgfischer.com
www.georgfischer.pl

Romania
Georg Fischer
Piping Systems Ltd
020257 Bucharest - Sector 2
Phone +40(0)21/230 53 80
ro.ps@georgfischer.com

Russia
Georg Fischer Piping Systems
Office 14a, 3 Entrance, 9 Floor
Business Center Parus
1st Tverskaya-Yamskaya Street, 23
Moscow 125047
Tel. +7 495 258 60 80
ru.ps@georgfischer.com

Singapore
George Fischer Pte Ltd
528 872 Singapore
Phone +65(0)67 47 06 11
sgp.ps@georgfischer.com
www.georgefischer.com.sg

Spain / Portugal
Georg Fischer S.A.
28046 Madrid
Phone +34(0)91/781 98 90
es.ps@georgfischer.com
www.georgfischer.es

Sweden / Finland
Georg Fischer AB
12523 Älvsjö-Stockholm
Phone +46(0)8/506 775 00
info.se.ps@georgfischer.com
www.georgfischer.se

Switzerland
Georg Fischer
Rohrleitungssysteme (Schweiz) AG
8201 Schaffhausen
Phone +41(0)52 631 30 26
ch.ps@georgfischer.com
www.piping.georgfischer.ch

Taiwan
Georg Fischer Piping Systems
2F, No. 88, Hsing Te Road
San Chung City
Taipei Hsien, Taiwan (R.O.C.)
Phone +886 2 8512 2822
Fax +886 2 8512 2823

United Kingdom / Ireland
George Fischer Sales Limited
Coventry, CV2 2ST
Phone +44(0)2476 535 535
uk.ps@georgfischer.com
www.georgefischer.co.uk

USA / Canada / Latin America / Caribbean
George Fischer Inc.
Tustin, CA 92780-7258
Phone +1(714) 731 88 00
Toll Free 800/854 40 90
us.ps@georgfischer.com
www.us.piping.georgefischer.com

Export
Georg Fischer
Piping Systems (Switzerland) Ltd.
8201 Schaffhausen
Phone +41 (0)52-631 30 26
Fax +41 (0)52-631 28 93
export.ps@georgfischer.com
www.piping.georgfischer.ch

GMST 8259/4 (1.07)

© Georg Fischer Piping Systems Ltd
CH-8201 Schaffhausen/Switzerland, 2006

Printed in Germany

+GF+

GEORG FISCHER
PIPING SYSTEMS