GEMÜ SU60 SUMONDO

Motorized actuator for single-use valves

Features

- Hermetic separation between medium and actuator
- Open/close function, positioner and process controller
- Actuation force and actuating speed variably adjustable
- Optical position indication via LED and indicator spindle
- Operable via web interface eSy-Web or Modbus TCP
- Wide range of functions (including position feedback, opening and closing stroke limits, diagnostic functions)

Description

The GEMÜ SU60 SUMONDO motorized hollow shaft actuator is based on technology that does not use brushes or sensors and therefore guarantees high performance and a long service life. Thanks to its integrated positioner and process controller, the actuator is not only ideal for OPEN/CLOSE applications, but also for variable and complex control applications. The actuator is joined to the media wetted GEMÜ SUB unit, comprising a valve body and welded sealing diaphragm, by means of a clamp connection. After use, the media wetted GEMÜ SUB unit can easily be disconnected from the actuator and replaced. The actuator remains in the plant.

Technical specifications

- **Media temperature:** 5 to 40 °C
- **Ambient temperature:** 0 Up to 40 °C
- **Operating pressure :** 0 Up to 4.9 bar
- **Nominal sizes:** DN 8 to 25
- **Connection types:** Clamp I Hose barb
- **Body materials:** PP-R, natural
- **Diaphragm materials:** TPE
- **Supply voltage:** 24 V DC
- **Actuating speed:** max. 6 mm/s
- **Protection class:** IP 65
- **Conformities:** EAC I USP

Technical data depends on the respective configuration

further information
webcode: GW-SU60

Product description

Construction

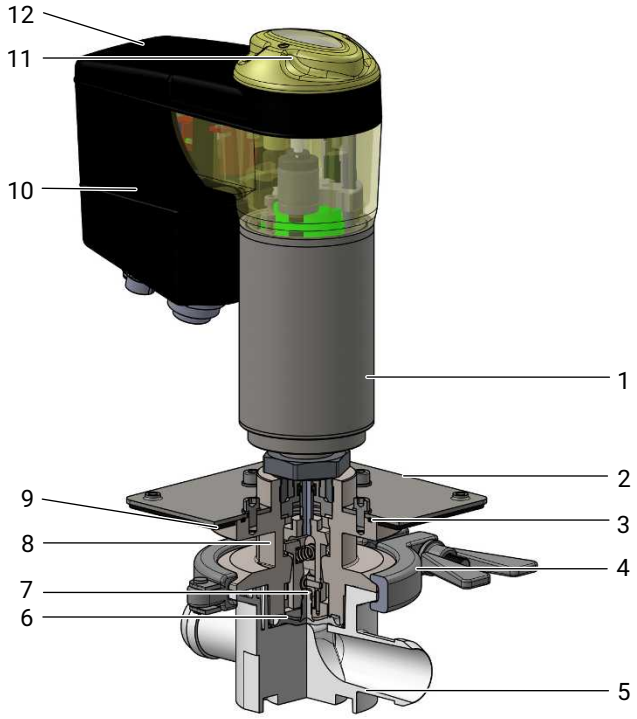

Item	Name	Materials
1	Actuator base	1.4301
2	Mounting flange	Stainless steel
3	O-ring	EPDM
4	Clamping device	Stainless steel
5	Valve body	PP-R
6	Diaphragm	TPE
7	Diaphragm pin	PP-R
8	Distance piece	Stainless steel
9	Gasket	EPDM, angular
10	Actuator housing	PESU
11	Cover with high visibility LED, manual override and on-site control	PESU
12	Actuator top	PESU black

Availability

MG Code	Connection size [1]	2/2-way body		T body		Angle valve body, right
		Hose barb	Clamp connection	Hose barb	Clamp connection	Hose barb
B	**8**	X	-	-	-	-
	10	X	-	X	-	X
	15	X	-	X	-	X
C	**15**	X	-	-	-	-
	20	X	X	X	X	-
	25	X	X	X	X	-
D	**20**	X	X	-	-	-
	25	X	X	-	-	-

MG = diaphragm size, X = standard

1) **Connection size 1**
Code 8: DN 8 (1/4")
Code 10: DN 10 (3/8")
Code 15: DN 15 (1/2")
Code 20: DN 20 (3/4")
Code 25: DN 25 (1")

Order data

The order data provide an overview of standard configurations.

Please check the availability before ordering. Other configurations available on request.

Because the actuator remains in the plant, there is a complete SUMONDO valve consisting of the SU60 motorized actuator (with distance piece and clamping device) and the SUB diaphragm valve body (with a fixed internally welded diaphragm).

SU60 motorized actuator

Order codes

1 Type	Code
Single-use actuator, motorized metal version	SU60

2 Diaphragm size	Code
Diaphragm size B	B
Diaphragm size C	C
Diaphragm size D	D

3 Diaphragm mounting	Code
Pin	G

4 Voltage/Frequency	Code
24 V DC	C1

5 Control module	Code
OPEN/CLOSE, positioner and process controller	L0

6 Actuator version	Code
Actuator size 0	0A

Order example SU60

Ordering option	Code	Description
1 Type	SU60	Single-use actuator, motorized metal version
2 Diaphragm size	B	Diaphragm size B
3 Diaphragm mounting	G	Pin
4 Voltage/Frequency	C1	24 V DC
5 Control module	L0	OPEN/CLOSE, positioner and process controller
6 Actuator size	0A	Actuator size 0

Diaphragm valve body SUB

Order codes

1 Type	Code
Single-use body	SUB

2 Diaphragm size	Code
Diaphragm size B	B
Diaphragm size C	C
Diaphragm size D	D

3 Connection size 1	Code
DN 8 (1/4")	8
DN 10 (3/8")	10
DN 15 (1/2")	15
DN 20 (3/4")	20
DN 25 (1")	25

4 Body configuration	Code
2/2-way body	D
Angle valve body, right	R
T body	T

5 Connection	Code
Clamp connection similar to ASME-BPE	CA
Hose barb	HB

6 Body material	Code
PP-R, natural	B8

7 Diaphragm material	Code
TPE	K8

8 Connection size 2	Code
1/4" (DN 8)	8
3/8" (DN 10)	10
1/2" (DN 15)	15
3/4" (DN 20)	20
1" (DN 25)	25

9 Connection of spigot 2	Code
Clamp connection similar to ASME-BPE	CA
Hose barb	HB

Order example SUB

Ordering option	Code	Description
1 Type	SUB	Single-use body
2 Diaphragm size	B	Diaphragm size B
3 Connection size 1	10	DN 10 (3/8")
4 Body configuration	T	T body
5 Connection	HB	Hose barb
6 Body material	B8	PP-R, natural
7 Diaphragm material	K8	TPE
8 Connection size 2	10	3/8" (DN 10)
9 Connection of spigot 2	HB	Hose barb

Technical data

Medium

Working medium: Corrosive, inert, liquid media which have no negative impact on the physical and chemical properties of the body and diaphragm material.

Temperature

Media temperature: 5 — 40 °C

Ambient temperature: 0 — 40 °C

Storage temperature: 0 — 40 °C

Pressure

Operating pressure: 0 – 4.9 bar (Diaphragm size code B, C),
0 – 4.5 bar (Diaphragm size code D)

Kv values

AG [1]	MG	Connection type code [2]	Body configuration code [3]	Kv value [m³/h]	Cv value [US-gpm]
8	**B**	**HB**	**D**	0.47	0.55
10		**HB**	**D**	1.08	1.26
			T	1.03	1.21
			R	1.02	1.19
15		**HB**	**D**	1.59	1.86
			T	1.47	1.72
			R	1.44	1.68
15	**C**	**HB**	**D**	2.17	2.54
20		**HB**	**D**	3.29	3.85
			T	2.15	2.52
		CA	**D**	3.29	3.85
			T	2.15	2.52
25		**HB**	**D**	4.55	5.32
			T	3.81	4.46
		CA	**D**	4.55	5.32
			T	3.81	4.46
20	**D**	**CA, HB**	**D**	9.21	10.78
25		**CA, HB**	**D**	12.19	14.26

AG = connection size
MG = diaphragm size
Kv values determined based on DIN EN 60534-2-3:1998 standard, inlet pressure 4 bar, Δp 1 bar
The Kv values for other product configurations (e.g. other diaphragm or body materials) may differ. In general, all diaphragms are subject to the influences of pressure and temperature from the process. Therefore the Kv values may exceed the tolerance limits of the standard.

1) **Connection size 1**
   Code 8: DN 8 (1/4")
   Code 10: DN 10 (3/8")
   Code 15: DN 15 (1/2")
   Code 20: DN 20 (3/4")
   Code 25: DN 25 (1")

2) **Connection**
   Code CA: Clamp connection similar to ASME-BPE
   Code HB: Hose barb

3) **Body configuration**
   Code D: 2/2-way body
   Code R: Angle valve body, right
   Code T: T body

Product conformity

NOTICE

Certifications

The certifications only apply to the diaphragms and valve bodies (medium wetted parts) and **not** the actuator.

Certifications:
- USP Bacterial Endotoxins Test, USP <85>
- USP Biological Reactivity Test in vitro, USP <87>
- USP Biological Reactivity Tests in vivo for Class VI, USP <88>
- USP Physicochemical Tests for Plastics, USP <661>
- USP Particulate Matter in Injections, USP <788>, USP <790>
- Validation guide on request

Machinery Directive: 2006/42/EC

Pressure Equipment Directive: 2014/68/EU

EMC Directive: 2014/30/EU

Mechanical data

Service life:

Diaphragm valve body (SUB): 100.000 switching cycles (according to GEMÜ product validation) or max. 4.5 years from production date (1.5 years before sterilization/3 years after sterilization)

Protection class: Protection class IP 65 acc. to EN 60529

Actuating speed: Adjustable, max. 6 mm/s

Weight:

Body

Type	Connection Code 1)	Body configuration Code 2)	MG B			MG C			MG D	
			1/4" (DN 8)	3/8" (DN 10)	1/2" (DN 15)	1/2" (DN 15)	3/4" (DN 20)	1" (DN 25)	3/4" (DN 20)	1" (DN 25)
SUB	**HB**	**D**	36	40	42	91	94	99	80	80
		T	-	44	47	-	108	113	-	-
		R	-	43	46	-	-	-	-	-
	CA	**D**	-	-	-	-	97	100	99	100
		T	-	-	-	-	111	112	-	-

Weight in g, MG = diaphragm size

1) **Connection**
Code CA: Clamp connection similar to ASME-BPE
Code HB: Hose barb

2) **Body configuration**
Code D: 2/2-way body
Code R: Angle valve body, right
Code T: T body

Complete unit (actuator, distance piece and body)

Weight:

MG	Weight
B	3.9
C	4.0
D	4.1

Weights in kg

Electrical data

Supply voltage:

	Actuator size 0
Voltage	Uv = 24 V DC ± 10%
Power	Max. 14 W
Operating mode (OPEN/CLOSED operation)	Continuous duty
Operating mode (control operation)	Class C acc. to EN 15714-2
Reverse battery protection	Yes

Analogue input signals

Set value

Input signal: 0/4 - 20 mA; 0 – 10 V DC (selectable using software)

Input type: passive

Input resistance: 250 Ω

Accuracy/linearity: ≤ ±0.3% of full flow

Temperature drift: ≤ ±0.1% / 10°K

Resolution: 12 bit

Reverse battery protection: No

Overload proof: Yes (up to ± 24 V DC)

Process actual value

Input signal: 0/4 - 20 mA; 0 – 10 V DC (selectable using software)

Input type: passive

Input resistance: 250 Ω

Accuracy/linearity: ≤ ±0.3% of full flow

Temperature drift: ≤ ±0.1% / 10°K

Resolution: 12 bit

Reverse battery protection: No

Overload proof: Yes (up to ± 24 V DC)

Digital input signals

Digital inputs:	3
Function:	Can be selected using software
Voltage:	24 V DC
Logic level "1":	>14 V DC
Logic level "0":	< 8 V DC
Input current:	typ. 2.5 mA (at 24 V DC)

Analogue output signals

Actual value

Output signal:	0/4 - 20 mA; 0 – 10 V DC (selectable using software)
Output type:	Active (AD5412)
Accuracy:	≤ ±1% of full flow
Temperature drift:	≤ ±0.1% / 10°K
Load resistor:	≤ 750 kΩ
Resolution:	10 bit
Overload proof:	Yes (up to ± 24 V DC)
Short-circuit proof:	Yes

Digital output signals

Switching outputs 1 and 2

Design:	2x change-over contact, potential-free
Switch rating:	max. 48 V DC / 48 V AC
Switch points:	Adjustable 0 - 100 %

Switching output 3

Function:	Signal fault
Type of contact:	Push-Pull
Switching voltage:	Supply voltage
Switching current:	≤ 0.1 A
Drop voltage:	Max. 2.5 V DC at 0.1 A
Overload proof:	Yes (up to ± 24 V DC)
Short-circuit proof:	Yes
Pull-Down resistance:	120 kΩ

eSy-Web communication

Interface: Ethernet

Function: Parameterisation via web browser

IP address: 192.168.2.1 alterable via web browser

Subnet screen: 255.255.252.0 alterable via web browser

The actuator and the PC must be in the same network to use the web server. The IP address of the actuator is entered in the web browser and the actuator can then be parametrised. In order to use more than one actuator, a definitive IP address must be assigned to each actuator in the same network.

Modbus TCP communication

Interface: Modbus TCP

IP address: 192.168.2.1 alterable via web browser

Subnet screen: 255.255.252.0 alterable via web browser

Port: 502

Supported function codes:

Code Dezimal	Code Hex	Function
3	0x03	Read Holding Registers
4	0x04	Read Input Registers
6	0x06	Write Single Register
16	0x10	Write Multiple Registers
23	0x17	Read / Write Multiple Registers

Electrical connections

Connection X1

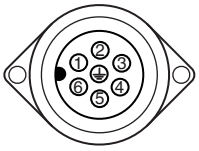

7-pin plug, Binder, type 693

Pin	Signal name
Pin 1	Uv, 24 V DC supply voltage
Pin 2	Uv GND
Pin 3	Relay output K1, common
Pin 4	Relay output K1, make contact
Pin 5	Relay output K2, common
Pin 6	Relay output K2, make contact
Pin PE	Function earth

Connection X2

5-pin M12 built-in socket, D-coded

Pin	Signal name
Pin 1	Tx + (Ethernet)
Pin 2	Rx + (Ethernet)
Pin 3	Tx - (Ethernet)
Pin 4	Rx - (Ethernet)
Pin 5	Shield

Connection X3

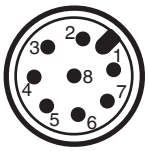

8-pin M12 plug, A-coded

Pin	Signal name
Pin 1	W+ set value input
Pin 2	W – set value input
Pin 3	X + actual value output
Pin 4	GND (actual value output, digital input 1 – 3, error message output)
Pin 5	Error message output 24 V DC
Pin 6	Digital input 3
Pin 7	Digital input 1
Pin 8	Digital input 2

Connection X4

4-pin M12 built-in socket, A-coded

Pin	Signal name
Pin 1	UV, 24 V DC actual value supply
Pin 2	n.c.
Pin 3	GND (actual value supply, actual value input)
Pin 4	X+, process actual value input
Pin 5	n.c.

Connection diagram

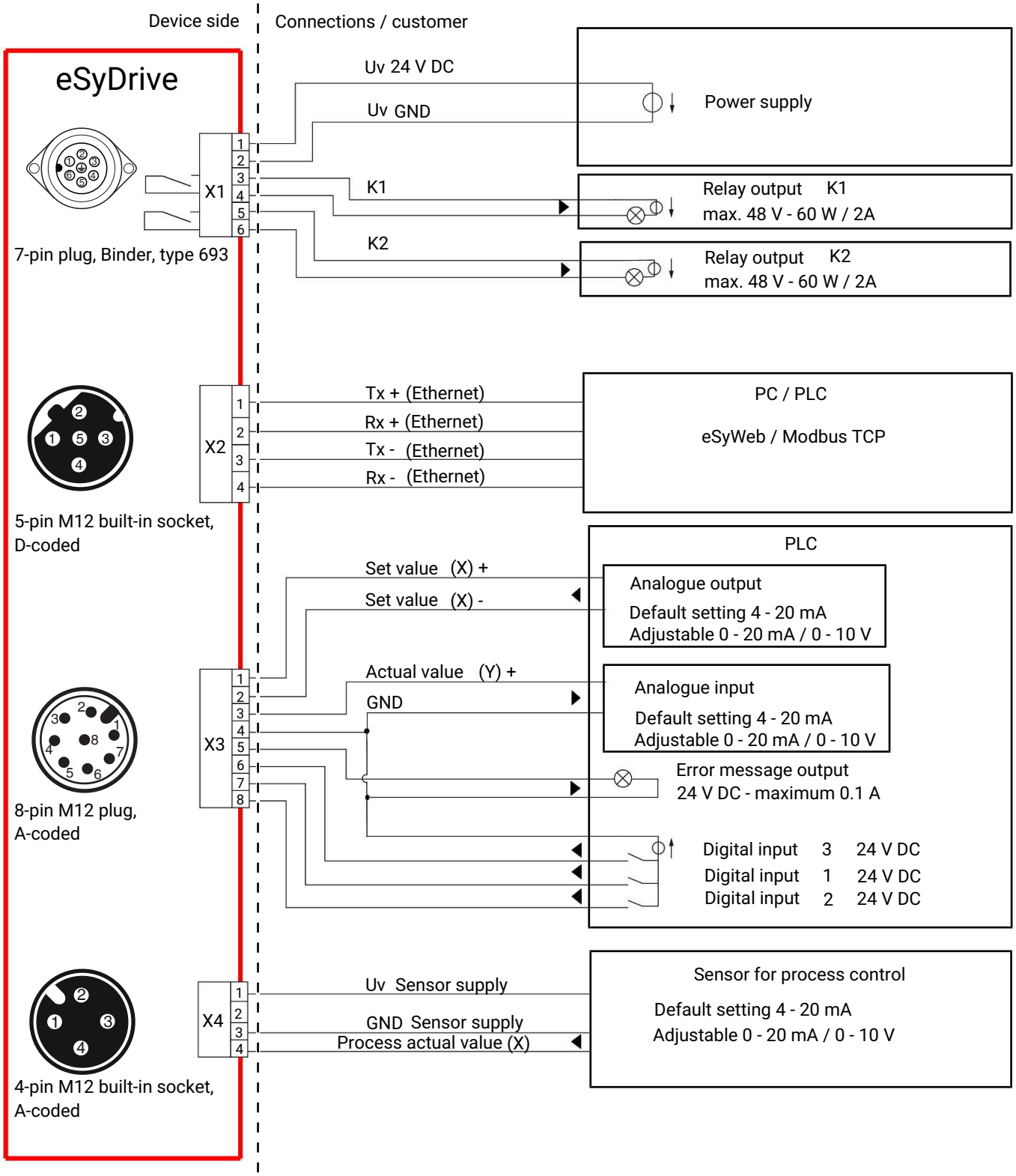

= Switch
= Consumer
= Signal direction
= Power supply

Dimensions

Actuator dimensions

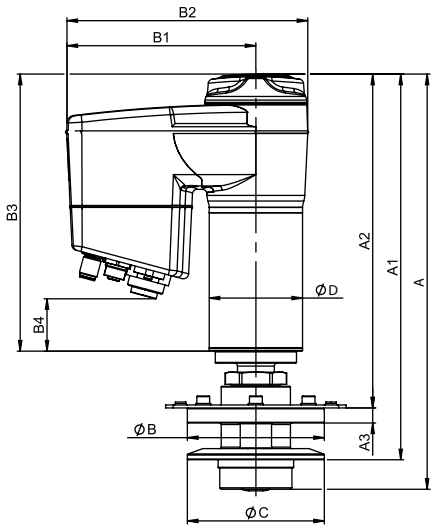

MG	DN	A	A1	A2	A3	ØB	B1	B2	B3	B4	ØC	ØD
B	**1/4" (DN 8), 1/2" (DN 15)**	274.6	269.5	232.1	10.0	91.0	125.5	160.0	184.1	34.7	64.0	62.0
C	**3/4" (DN 20), 1" (DN 25)**	275.9	256.3	221.9	10.0	91.0	125.5	160.0	184.1	34.7	91.0	62.0
D	**3/4" (DN 20), 1" (DN 25)**	272.9	249.1	210.3	10.0	91.0	125.5	160.0	184.1	34.7	91.0	62.0

Dimensions in mm, MG = diaphragm size

Body dimensions

Angle valve body, right (code R)

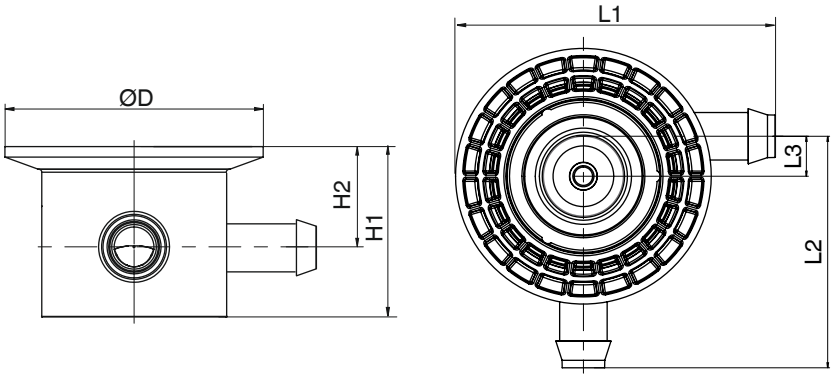

Connection type hose barb (code HB)

MG	DN	øD	H1	H2	L1	L2	L3
B	**3/8" (DN 10)**	64.0	33.3	22.3	48.0	58.0	10.0
	1/2" (DN 15)	64.0	33.3	22.3	55.8	66.8	10.0

Dimensions in mm, MG = diaphragm size

2/2-way body (code D)

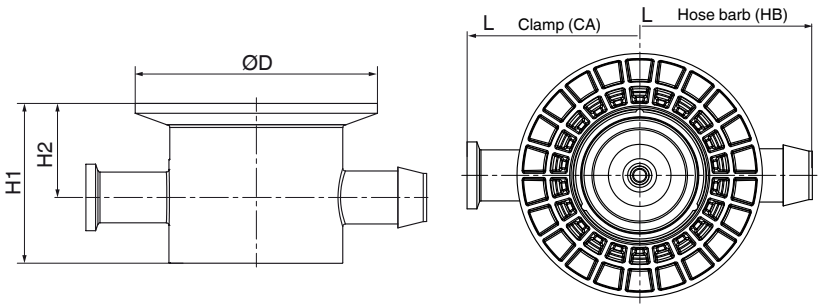

Connection type clamp (code CA) [1)]

MG	DN	øD	H1	H2	L
C	**3/4"(DN 20)**	91.0	60.0	35.3	128.0
	1"(DN 25)	91.0	60.0	35.3	137.4
D	**3/4"(DN 20)**	91.6	58.5	38.0	134.6
	1"(DN 25)	91.6	58.5	39.5	134.6

Connection type hose barb (code HB) [1)]

MG	DN	øD	H1	H2	L
B	**1/4" (DN 8)**	64.0	33.3	22.3	80.6
	3/8" (DN 10)	64.0	33.3	22.3	95.9
	1/2" (DN 15)	64.0	33.3	22.3	111.5
C	**1/2" (DN 15)**	91.0	60.0	35.3	126.0
	3/4" (DN 20)	91.0	60.0	35.3	128.0
	1" (DN 25)	91.0	60.0	35.3	140.0
D	**3/4" (DN 20)**	91.6	58.5	38.0	139.0
	1" (DN 25)	91.6	58.5	39.5	139.0

Dimensions in mm, MG = diaphragm size

1) **Connection**
Code CA: Clamp connection similar to ASME-BPE
Code HB: Hose barb

T valve body (code T)

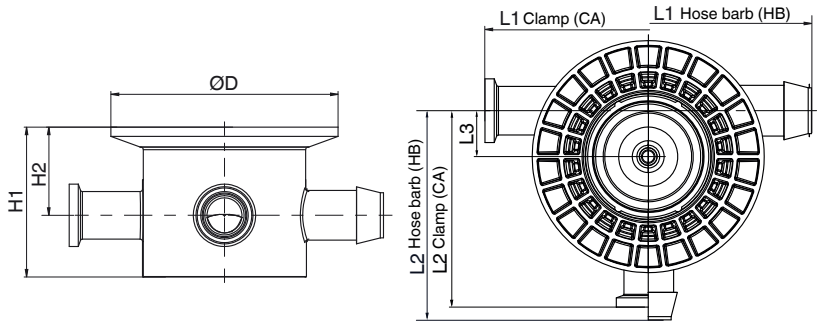

Connection type clamp (code CA) [1)]

MG	DN	ØD	H1	H2	L1	L2	L3
C	**3/4" (DN 20)**	91.0	60.0	35.3	128.0	82.0	18.0
	1" (DN 25)	91.0	60.0	35.3	137.4	82.0	18.0

Connection type hose barb (code HB) [1)]

MG	DN	ØD	H1	H2	L1	L2	L3
B	**3/8" (DN 10)**	64.0	33.3	22.3	96.0	58.0	10.0
	1/2" (DN 15)	64.0	33.3	22.3	111.5	65.8	10.0
C	**3/4" (DN 20)**	91.0	60.0	35.3	128.0	82.0	18.0
	1" (DN 25)	91.0	60.0	35.3	140.0	88.0	18.0

Dimensions in mm, MG = diaphragm size

1) **Connection**
Code CA: Clamp connection similar to ASME-BPE
Code HB: Hose barb

Connection dimensions

Clamp (code CA)

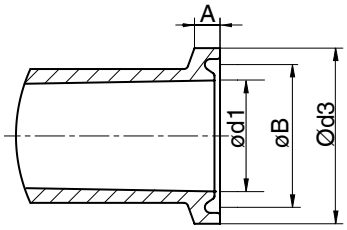

MG	DN	A	øB	ød1	ød3
C	**3/4" (DN 20)**	3.6	21.9	15.75	25.0
	1" (DN 25)	3.6	31.0	22.1	34.0
D	**3/4" (DN 20)**	2.85	43.4	19.05	50.5
	1" (DN 25)	2.85	43.4	25.4	50.5

Dimensions in mm, MG = diaphragm size
Tolerance ± 0.2 mm

Hose barb (code HB)

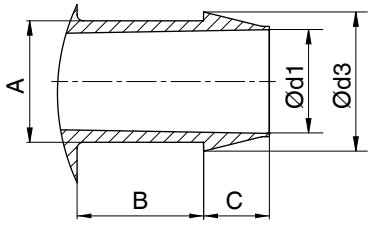

MG	DN	A	B	C	ød1	ød3
B	**1/4" (DN 8)**	7.9	10.6	4.5	5.9	9.3
	3/8" (DN 10)	11.9	16.0	6.7	9.4	13.8
	1/2" (DN 15)	15.9	21.4	9.1	12.6	18.8
C	**1/2" (DN 15)**	15.9	21.4	9.1	12.6	18.8
	3/4" (DN 20)	19.9	20.7	10.8	17.0	22.8
	1" (DN 25)	28.0	24.7	11.5	25.3	30.8
D	**3/4" (DN 20)**	22.0	21.4	7.5	19.0	25.0
	1" (DN 25)	28.0	22.2	11.5	25.4	30.8

Dimensions in mm, MG = diaphragm size
Tolerance ± 0.2 mm

Error messages

Accessories

GEMÜ 1218

Connector

GEMÜ 1218 is a connector (cable socket/cable plug), 7-pin. Straight or 90° angled plug type.

GEMÜ 1218 Binder connector			
Connection X1 – supply voltage, relay outputs			
Binder plug	468/eSy series mating connector	Terminal compartment/ screws, 7-pin	88220649 [1)]
		Terminal compartment/ screws, 7-pin, 90°	88377714
		Terminal compartment/ screws, 7-pin, 90°, fitted with a 2 metre cable set	88770522

1) provided in the scope of delivery

GEMÜ 1219

Cable socket / cable plug M12

The GEMÜ 1219 is a connector (cable socket / cable plug) M12, 5-pin. Straight and/or 90° angled plug type. Defined cable length or with threaded connection without cable. Various materials available for the threaded ring.

GEMÜ 1219 Ethernet/M12 cable			
Connection X2 - network connection			
M12 cable plug, straight, 4-pin	Fitted with a 1 metre cable set	Ethernet RJ45	88450499
	Fitted with a 4 metre cable set		88450500
	Fitted with a 15 metre cable set		88450502
M12 cable plug, angled, 4-pin	Fitted with a 4 metre cable set		88715615
Connection X3 – analogue/digital inputs and outputs			
M12 cable socket, straight, 8-pin	Without cable dia. 6–8 mm		88304829 [1)]
	Fitted with a 5 metre cable set, PUR black cable		88758155
M12 cable socket, angled, 8-pin	Without cable dia. 6–8 mm		88422823
	Fitted with a 5 metre cable set, PUR black cable		88374574
Connection X4 – actual value supply, actual value input			
M12 cable plug, straight, 5-pin	Without cable PG7	Nickel-plated brass	88208641
	Fitted with a 2 metre cable set, PUR black cable	5 x 0.34, nickel-plated brass	88208643
	Fitted with a 5 metre cable set, PUR black cable	5 x 0.34, nickel-plated brass	88208644
M12 cable plug, angled, 5-pin	Without cable dia. 6–8 mm	Nickel-plated brass	88208645
	Fitted with a 2 metre cable set, PUR black cable	5 x 0.34, nickel-plated brass	88208649
	Fitted with a 5 metre cable set, PUR black cable	5 x 0.34, nickel-plated brass	88208650

1) provided in the scope of delivery

GEMÜ 1571

Emergency power supply module

The GEMÜ 1571 capacitive emergency power supply module is suitable for valves with motorized actuators such as GEMÜ eSyStep and eSyDrive as well as the GEMÜ C53 iComLine control valve. In the event of a power failure, the product provides an uninterrupted power supply so that the valve can be moved to the safety position. The emergency power supply module is available individually or with an expansion module and can supply several valves. The input and output voltage is 24 V.

GEMÜ 1571 emergency power supply module			
Input voltage	Output voltage	Capacity	Item number
24 V	24 V	1700 Ws	88660398
24 V	24 V	13200 Ws	88751062

GEMÜ 1573

Switching power supply unit

The GEMÜ 1573 switching power supply unit converts unstable input voltages from 100 to 240 V AC into a continuous DC voltage. It can be used as an accessory for valves with motorized actuators e. g. GEMÜ eSyLite, eSyStep und eSyDrive and for additional devices with a 24 V DC power supply. Different power levels, output currents and a 48 V DC version for servoDrive actuators are available.

GEMÜ 1573 switching power supply unit			
Input voltage	Output voltage	Output current	Item number
100 - 240 V AC	24 V DC	5 A	88660400
		10 A	88660401

GEMÜ Gebr. Müller Apparatebau GmbH & Co. KG
Fritz-Müller-Straße 6-8, 74653 Ingelfingen-Criesbach, Germany
Phone +49 (0) 7940 1230 · info@gemue.de
www.gemu-group.com

Subject to alteration | 03.2025 | 88775838