GEMÜ SU40 SUMONDO

Pneumatic actuator for single-use valves

Features

- Impact resistant, corrosion resistant
- Integral optical position indicator
- Wide range of adaptation options for add-on components and accessories
- Tried-and-tested, reliable actuator design (remains in system)
- Hermetic separation between medium and actuator
- Autoclavable actuator

Description

The pneumatically operated GEMÜ SU40 actuator guarantees a high level of performance and a long service life thanks to its high-quality stainless steel components. The actuator is joined to the media wetted GEMÜ SUB unit, comprising a valve body and welded sealing diaphragm, by means of a clamp connection.
After use, the media wetted GEMÜ SUB unit can easily be disconnected from the actuator and replaced. The actuator remains in the plant.

Technical specifications

- **Media temperature :** 5 to 40 °C
- **Ambient temperature:** 0 to 40 °C
- **Operating pressure :** 0 to 4.9 bar
- **Nominal sizes:** DN 8 to 25
- **Connection types:** Clamp I Hose barb
- **Body materials:** PP-R, natural
- **Diaphragm materials:** TPE
- **Conformities:** EAC I USP

Technical data depends on the respective configuration

further information
webcode: GW-SU40

Product description

Construction

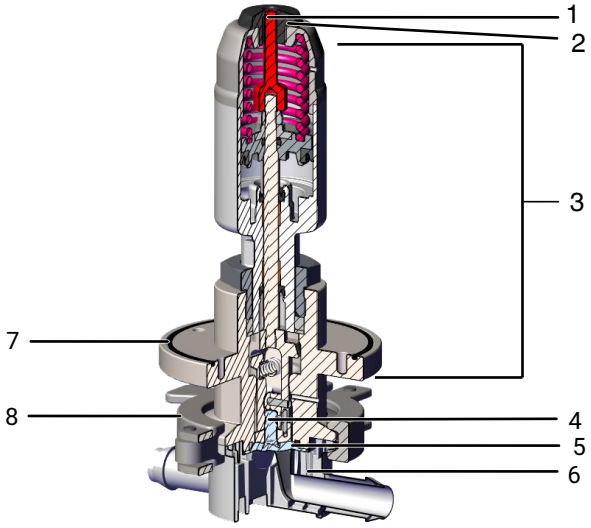

Item	Name	Materials
1	Optical position indicator	PP (red)
2	Sealing plug	PP
3	Actuator with distance piece	Stainless steel
4	Diaphragm pin	PP-R
5	Diaphragm	TPE
6	Body	PP-R
7	O-ring	EPDM
8	Clamping device	Stainless steel

Availability

MG Code	Connection size [1]	2/2-way body		T body		Angle valve body, right
		Hose barb	Clamp connection	Hose barb	Clamp connection	Hose barb
B	**8**	X	-	-	-	-
	10	X	-	X	-	X
	15	X	-	X	-	X
C	**15**	X	-	-	-	-
	20	X	X	X	X	-
	25	X	X	X	X	-
D	**20**	X	X	-	-	-
	25	X	X	-	-	-

MG = diaphragm size, X = standard

1) **Connection size 1**
Code 8: DN 8 (1/4")
Code 10: DN 10 (3/8")
Code 15: DN 15 (1/2")
Code 20: DN 20 (3/4")
Code 25: DN 25 (1")

Order data

The order data provide an overview of standard configurations.

Please check the availability before ordering. Other configurations available on request.

SU40 pneumatic actuator

Order codes

1 Type	Code
Pneumatically operated actuator metal version	SU40

2 Diaphragm size	Code
Diaphragm size B	B
Diaphragm size C	C
Diaphragm size D	D

3 Diaphragm mounting	Code
Pin	G

4 Control function	Code
Normally closed (NC)	1
Normally open (NO)	2
Double acting (DA)	3

5 Actuator size	Code
Actuator size 1G1	1G1

Order example SU40

Ordering option	Code	Description
1 Type	SU40	Pneumatically operated actuator metal version
2 Diaphragm size	B	Diaphragm size B
3 Diaphragm mounting	G	Pin
4 Control function	1	Normally closed (NC)
5 Actuator size	1G1	Actuator size 1G1

Diaphragm valve body SUB

Order codes

1 Type	Code
Single-use body	SUB

2 Diaphragm size	Code
Diaphragm size B	B
Diaphragm size C	C
Diaphragm size D	D

3 Connection size 1	Code
DN 8 (1/4")	8
DN 10 (3/8")	10
DN 15 (1/2")	15
DN 20 (3/4")	20
DN 25 (1")	25

4 Body configuration	Code
2/2-way body	D
Angle valve body, right	R
T body	T

5 Connection	Code
Clamp connection similar to ASME-BPE	CA
Hose barb	HB

6 Body material	Code
PP-R, natural	B8

7 Diaphragm material	Code
TPE	K8

8 Connection size 2	Code
1/4" (DN 8)	8
3/8" (DN 10)	10
1/2" (DN 15)	15
3/4" (DN 20)	20
1" (DN 25)	25

9 Connection of spigot 2	Code
Clamp connection similar to ASME-BPE	CA
Hose barb	HB

Order example SUB

Ordering option	Code	Description
1 Type	SUB	Single-use body
2 Diaphragm size	B	Diaphragm size B
3 Connection size 1	10	DN 10 (3/8")
4 Body configuration	T	T body
5 Connection	HB	Hose barb
6 Body material	B8	PP-R, natural
7 Diaphragm material	K8	TPE
8 Connection size 2	10	3/8" (DN 10)
9 Connection of spigot 2	HB	Hose barb

Technical data

Medium

Working medium: Corrosive, inert, liquid media which have no negative impact on the physical and chemical properties of the body and diaphragm material.

Control medium: Inert gases
Class 4, max. oil concentration 25 mg/m³

Temperature

Media temperature: 5 — 40 °C

Ambient temperature: 0 — 40 °C

Control medium temperature: max. 40 °C

Storage temperature: 0 — 40 °C

Pressure

Operating pressure: 0 – 4.9 bar (Diaphragm size code B, C),
0 – 4.5 bar (Diaphragm size code D)

Vacuum: All three actuator sizes open fully in control function 2, including when there is an upcoming vacuum of -930 mbar after the control pressure is removed.

Control pressure: Control function 1: 6.0–8.0 bar
Control function 2 and 3: See diagram

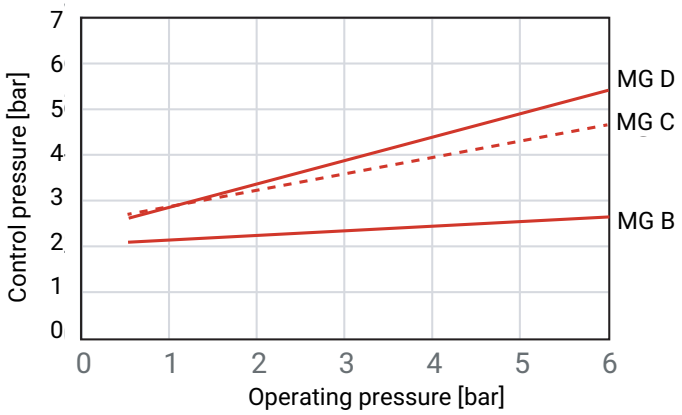

MG = diaphragm size

Filling volume: Control function 1, 2, 3: 0.03 dm³

Cv values:

MG	AG	Connection type (code)	Body configuration (code)	Kv values [m³/h]	Cv values [US-gpm]
B	**1/4"**	**HB**	**D**	0.47	0.55
	3/8"	**HB**	**D**	1.08	1.26
		HB	**T**	1.03	1.21
		HB	**R**	1.02	1.19
	1/2"	**HB**	**D**	1.59	1.86
		HB	**T**	1.47	1.72
		HB	**R**	1.44	1.68
C	**1/2"**	**HB**	**D**	2.17	2.54
	3/4"	**HB**	**D**	3.29	3.85
		HB	**T**	2.15	2.52
		CA	**D**	3.29	3.85
		CA	**T**	2.15	2.52
	1"	**HB**	**D**	4.55	5.32
		HB	**T**	3.81	4.46
		CA	**D**	4.55	5.32
		CA	**T**	3.81	4.46
D	**3/4"**	**CA, HB**	**D**	9.21	10.78
	1"	**CA, HB**	**D**	12.19	14.26

MG = diaphragm size
AG = connection size
Kv values determined based on standard DIN EN 60534-2-3:1998, inlet pressure 4 bar, Δp 1 bar
The Kv values for other product configurations may deviate. In general, all diaphragms are subject to the influences of pressure, temperature, the process and their tightening torques. Therefore the Kv values may exceed the tolerance limits of the standard.

Product conformities valve body SUB

Certifications:

- USP Bacterial Endotoxins Test, USP <85>
- USP Biological Reactivity Test in vitro, USP <87>
- USP Biological Reactivity Tests in vivo for Class VI, USP <88>
- USP Physicochemical Tests for Plastics, USP <661>
- USP Particulate Matter in Injections, USP <788>, USP <790>
- Validation guide on request

Mechanical data

Service life:

Diaphragm valve body (SUB): 100.000 switching cycles (according to GEMÜ product validation) or max. 4.5 years from production date (1.5 years before sterilization/3 years after sterilization)

Weight:

Actuator with distance piece

MG	Weights
B	2.4
C	2.5
D	2.6

Weights in kg

Valve bodies

MG	AG	DN	Connection type (code)				
			HB	HB	HB	CA	CA
			Body configurations (code)				
			D	T	R	D	T
B	**1/4”**	**8**	36,0	-	-	-	-
	3/8”	**10**	40,0	44,0	43,0	-	-
	1/2”	**15**	42,0	47,0	46,0	-	-
C	**1/2”**	**15**	91,0	-	-	-	-
	3/4”	**20**	94,0	108,0	-	97,0	111,0
	1”	**25**	99,0	113,0	-	100,0	112,0
D	**3/4”**	**20**	80,0	-	-	99,0	-
	1”	**25**	80,0	-	-	100,0	-

Weight in g, MG = diaphragm size
AG = connection size

Dimensions

Actuator dimensions

Actuator (control function 1)

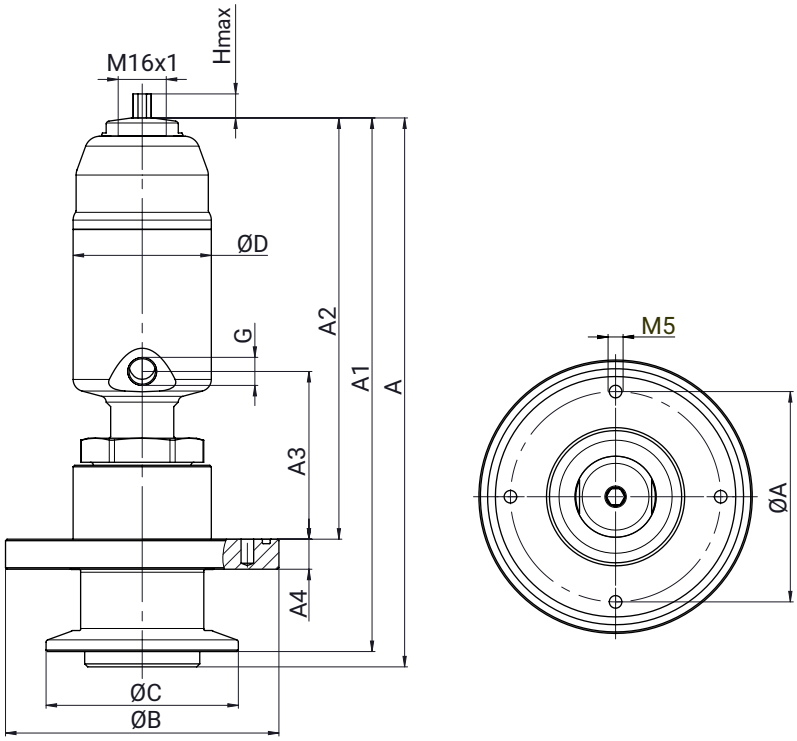

MG	A	A1	A2	A3	A4	G	ØA	ØB	øC	øD	Hmax
B	182.7	177.6	140.2	55.8	10.0	G1/8	70.0	91.0	64.0	46.0	8.0
C	184.0	164.4	130.0	45.6	10.0	G1/8	70.0	91.0	91.0	46.0	9.0
D	183.1	157.2	118.4	34.0	10.0	G1/8	70.0	91.0	91.0	46.0	12.0

Dimensions in mm
MG = diaphragm size

Actuator (control function 2, 3)

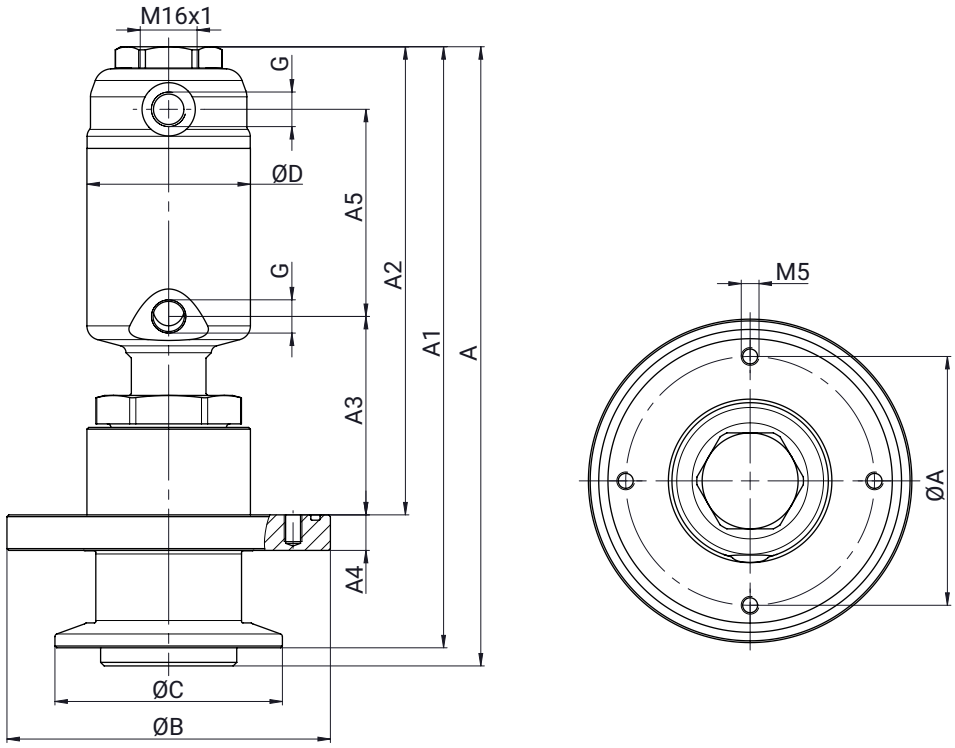

MG	A	A1	A2	A3	A4	A5	G	ØA	ØB	øC	øD
B	174.2	169.1	131.7	55.8	10.0	56.5	G1/8	70.0	91.0	64.0	46.0
C	175.7	155.9	121.5	45.6	10.0	56.5	G1/8	70.0	91.0	91.0	46.0
D	174.6	148.7	109.9	34.0	10.0	56.5	G1/8	70.0	91.0	91.0	46.0

Dimensions in mm
MG = diaphragm size

Body dimensions

Angle valve body, right (code R)

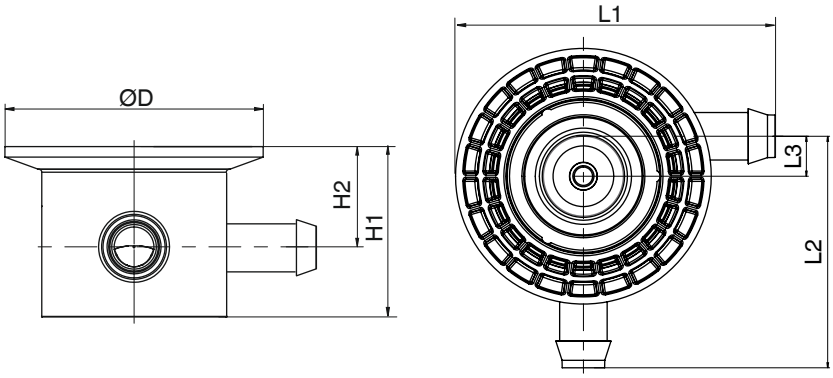

Connection type hose barb (code HB)

MG	DN	øD	H1	H2	L1	L2	L3
B	**3/8" (DN 10)**	64.0	33.3	22.3	48.0	58.0	10.0
	1/2" (DN 15)	64.0	33.3	22.3	55.8	66.8	10.0

Dimensions in mm, MG = diaphragm size

2/2-way body (code D)

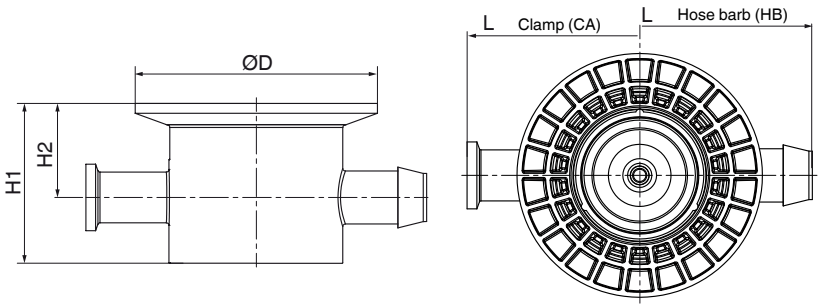

Connection type clamp (code CA) [1)]

MG	DN	øD	H1	H2	L
C	**3/4"(DN 20)**	91.0	60.0	35.3	128.0
	1"(DN 25)	91.0	60.0	35.3	137.4
D	**3/4"(DN 20)**	91.6	58.5	38.0	134.6
	1"(DN 25)	91.6	58.5	39.5	134.6

Connection type hose barb (code HB) [1)]

MG	DN	øD	H1	H2	L
B	**1/4" (DN 8)**	64.0	33.3	22.3	80.6
	3/8" (DN 10)	64.0	33.3	22.3	95.9
	1/2" (DN 15)	64.0	33.3	22.3	111.5
C	**1/2" (DN 15)**	91.0	60.0	35.3	126.0
	3/4" (DN 20)	91.0	60.0	35.3	128.0
	1" (DN 25)	91.0	60.0	35.3	140.0
D	**3/4" (DN 20)**	91.6	58.5	38.0	139.0
	1" (DN 25)	91.6	58.5	39.5	139.0

Dimensions in mm, MG = diaphragm size

1) **Connection**
Code CA: Clamp connection similar to ASME-BPE
Code HB: Hose barb

T valve body (code T)

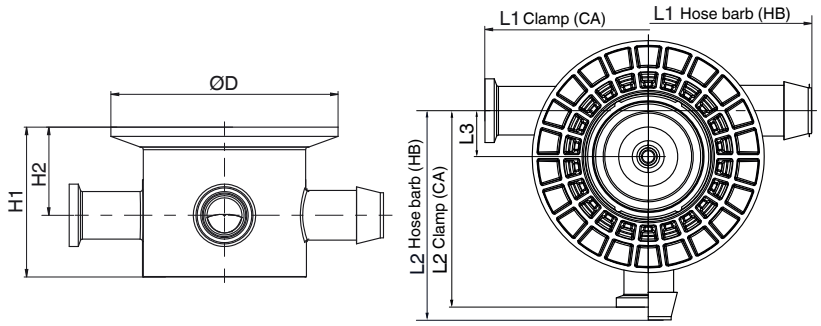

Connection type clamp (code CA) [1)]

MG	DN	ØD	H1	H2	L1	L2	L3
C	**3/4" (DN 20)**	91.0	60.0	35.3	128.0	82.0	18.0
	1" (DN 25)	91.0	60.0	35.3	137.4	82.0	18.0

Connection type hose barb (code HB) [1)]

MG	DN	ØD	H1	H2	L1	L2	L3
B	**3/8" (DN 10)**	64.0	33.3	22.3	96.0	58.0	10.0
	1/2" (DN 15)	64.0	33.3	22.3	111.5	65.8	10.0
C	**3/4" (DN 20)**	91.0	60.0	35.3	128.0	82.0	18.0
	1" (DN 25)	91.0	60.0	35.3	140.0	88.0	18.0

Dimensions in mm, MG = diaphragm size

1) **Connection**
Code CA: Clamp connection similar to ASME-BPE
Code HB: Hose barb

Connection dimensions

Clamp (code CA)

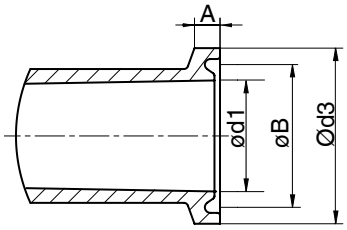

MG	DN	A	øB	ød1	ød3
C	**3/4" (DN 20)**	3.6	21.9	15.75	25.0
	1" (DN 25)	3.6	31.0	22.1	34.0
D	**3/4" (DN 20)**	2.85	43.4	19.05	50.5
	1" (DN 25)	2.85	43.4	25.4	50.5

Dimensions in mm, MG = diaphragm size
Tolerance ± 0.2 mm

Hose barb (code HB)

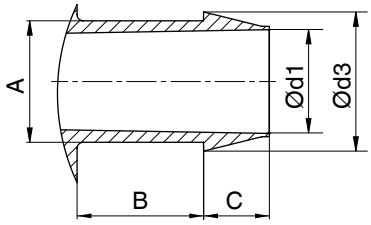

MG	DN	A	B	C	ød1	ød3
B	**1/4" (DN 8)**	7.9	13.6	4.5	5.9	9.3
	3/8" (DN 10)	11.9	19.0	6.7	9.4	13.8
	1/2" (DN 15)	15.9	24.4	9.1	12.6	18.8
C	**1/2" (DN 15)**	15.9	21.4	9.1	12.6	18.8
	3/4" (DN 20)	19.9	25.7	10.8	17.0	22.8
	1" (DN 25)	28.0	29.7	11.5	25.3	30.8
D	**3/4" (DN 20)**	22.0	21.4	7.5	19.0	25.0
	1" (DN 25)	28.0	22.2	11.5	25.4	30.8

Dimensions in mm, MG = diaphragm size
Tolerance ± 0.2 mm

Accessory

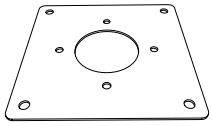

GEMÜ SU40 adapter plate

Mounting plate

Mounting plate for installing GEMÜ SU40 on the GEMÜ SUPM hole pattern.

GEMÜ 4232

Travel sensor for linear actuators

The GEMÜ 4232 travel sensor is intended for the attachment to valves with linear actuators and is used to determine the valve position. It is used as a travel sensor for the GEMÜ 1434 µPos, GEMÜ 1435 ePos, GEMÜ 1436 cPos and GEMÜ 1441 cPos-X intelligent positioners, which can be connected using either the open cable ends or an M12 cable connector (depending on the design and/or selection of the positioner).

Add-on components

GEMÜ 1215

Electrical position indicator

The GEMÜ 1215 electrical position indicator is suitable for mounting to pneumatically operated linear actuators. The position (end position open) of the valve spindle is reliably detected and fed back electronically by the operating bush with a microswitch.

GEMÜ 1230

Electrical position indicator

The GEMÜ 1230 electrical position indicator is suitable for mounting to pneumatically operated linear actuators. The position of the valve spindle is reliably detected and fed back electronically via microswitches through play-free and non-positive mounting. The GEMÜ 1230 has been specially designed for valves with a stroke of 2 to 20 mm.

GEMÜ 1234

Electrical position indicator

The GEMÜ 1234 electrical position indicator for linear actuators has a microprocessor controlled intelligent position sensor with an integrated analogue travel sensor system. Optical position indication is made by LEDs.

GEMÜ 1235

Electrical position indicator

The GEMÜ 1235 electrical position indicator is suitable for installation on pneumatically operated linear actuators and, with specific mounting parts, likewise suitable for pneumatically operated quarter turn actuators as well as further selected actuator versions. The position of the valve spindle is reliably electronically detected and evaluated using play-free and non-positive mounting. Intelligent microprocessor-controlled functions facilitate commissioning and support during operation. The current position of the valve is displayed via high-visibility LEDs and fed back via electrical signals.

GEMÜ 1236

Electrical position indicator

The GEMÜ 1236 electrical position indicator is suitable for installation on pneumatically operated linear actuators. The position of the valve spindle is reliably electronically detected and evaluated using play-free and non-positive mounting. Intelligent microprocessor-controlled functions facilitate commissioning and support during operation. The current position of the valve is displayed via high-visibility LEDs and fed back via electrical signals.

GEMÜ 1242

Electrical position indicator

The GEMÜ 1242 electrical position indicator is suitable for installation on pneumatically operated linear actuators. The position of the valve spindle is reliably electronically detected and evaluated using play-free and non-positive mounting. Intelligent microprocessor-controlled functions facilitate commissioning and support during operation. The current position of the valve is displayed via high-visibility LEDs and fed back via electrical signals. The GEMÜ 1242 has been specially designed for valves with a stroke of 2 to 46 mm.

GEMÜ 1434 µPos

Intelligent electro-pneumatic positioner

The GEMÜ 1434 µPos digital electro-pneumatic positioner is used to control pneumatically operated small to medium nominal size process valves with single acting linear actuators. The solid compact housing has a transparent cover. LEDs for status indication are integrated. Due to factory preconfiguration, this product does not require a display with operating keys. Pneumatic and electrical connections arranged so as to save space and enable easy access. All these features make the GEMÜ 1434 µPos a cost-effective solution for control tasks with basic requirements.

GEMÜ 1435 ePos

Intelligent electro-pneumatic positioner

The GEMÜ 1435 ePos digital electro-pneumatic positioner is used to control pneumatically operated process valves with single acting or double acting linear or quarter turn actuators, and detects the position of the valve using an external travel sensor. It has a robust aluminium housing with protected operating keys and an LCD display which allows the product to be individually adapted to the control task. The travel times can be set using integrated throttles. Connection and mounting to NAMUR is also possible. Therefore, the GEMÜ 1435 ePos is an optimal solution for control tasks with high requirements, especially in applications with harsh environmental conditions.

GEMÜ 1436 cPos

Intelligent positioner and integrated process controller

The GEMÜ 1436 cPos digital electro-pneumatic positioner has an optional integrated process controller to control pneumatically operated process valves with single acting or double acting linear or quarter turn actuators. When using the optional process controller, the signals from the sensors (e.g. flow, level, pressure, temperature) are detected and the media adjusted according to the specified set value. GEMÜ 1436 cPos has a robust aluminium housing with protected operating keys and an LCD display which allows the product to be individually adapted to complex control tasks. With additional equipment, the positioner can be used directly in fieldbus environments.

GEMÜ 1441 cPos-X

Intelligent electro-pneumatic positioner

The GEMÜ 1441 cPos-X is an intelligent, digital electro-pneumatic positioner in 2-wire technology used to control pneumatically operated process valves. It can be combined with single acting or double acting linear actuators or quarter turn actuators. This means that it can be used, among other things, for diaphragm, globe and diaphragm globe valves as well as for ball valves and butterfly valves, for instance. The positioner has a robust housing with a covered LCD display for status information. The positioner can be operated remotely using a mobile device in order to configure settings and to view detailed information.

GEMÜ Gebr. Müller Apparatebau GmbH & Co. KG
Fritz-Müller-Straße 6-8, 74653 Ingelfingen-Criesbach, Germany
Phone +49 (0) 7940 1230 · info@gemue.de
www.gemu-group.com

Subject to alteration | 07.2025 | 88419279