Markwik 21+ Comfort SQ Taps

Introducing a new Markwik 21+ family member

COLLABORATE. INNOVATE. PROTECT.

Armitage Shanks

Part of the Ideal Standard Group.

Introducing the safest non-thermostatic tap that saves money too.

Maintaining safety with lower maintenance costs.

With ever-tighter healthcare budgets, it's crucial to offer the highest standards of user safety and hygiene without having to shoulder rising maintenance costs – and the new Markwik 21+ Comfort Sequential tap, with its Pressure Balance Valve (PBV) technology, enables you to do just that.

The new addition to the Markwik 21+ range.

The Markwik 21+ PBV tap is engineered on the same design principles of Armitage Shanks' award winning Markwik 21+ thermostatic mixer taps, that have set the standard for safe temperature water delivery in healthcare. Which means you can be assured of its quality, performance and durability.

The advantages of a PBV sequential mixer tap.

While thermostatic taps remain the best option for maintaining a consistent outlet temperature and pressure, PBV technology offers an alternative safe water temperature delivery option for suitably identified hospital and healthcare environments.

Although all taps and mixers in healthcare environments must be checked periodically, a PBV tap doesn't need to follow the stringent maintenance plans stipulated for TMVs (as laid down in HTM 04-01: D08 Supplement), and still meets the changes likely to be proposed in HBN 00-10 Part C*.

The Markwik 21+ Comfort SQ PBV tap also has the unique advantage of being a sequential mixer – dispensing water from ambient cold to hot using a single lever – which helps keep both supplies flowing and prevents water stagnation.

* Expected to be published in 2025.

Putting safety first

As you'd expect, user safety is the priority for the Markwik 21+ Comfort Sequential PBV.

If the hot water supply fails, the cold water flow quickly decreases. Conversely, if the cold water supply fails, the hot water flow is reduced to minimise the risk of scalding.

How does PBV technology work?

The pressure balancing valve adjusts to variations in water system pressure to maintain a consistent water temperature at the outlet, even though there may be pressure variations.

At the heart of the valve in the Markwik 21+ Comfort SQ tap is a unique, ceramic 'sleeve and shuttle'. When a pressure change is detected, the cleverly engineered shuttle moves within the sleeve, increasing or restricting the hot and cold supplies to achieve a new pressure balance and, thereby maintaining a consistent outlet temperature.

Being ceramic, the sleeve and shuttle are also smoother, more hygienic and durable than others on the market.

New Markwik 21+ tap, same market leading design features.

Available in panel mounted or rim mounted versions, the Markwik 21+ Comfort SQ PBV tap boasts a range of advanced features that, like the rest of the Markwik 21+ range, set new standards in safety and hygiene for healthcare staff and patients.

Autoclave-ready spouts

Markwik 21+ / 21+ Comfort SQ detachable spouts allow autoclave cleaning to prevent biofilm attachment and help reduce the risk of bacterial infection.

Submerge and disinfect

Markwik 21+ / 21+ Comfort SQ mixers can be fully dismantled for disinfection, with internal components designed to withstand 80°C, and detachable outlets are designed to withstand 135°C for autoclaving.

Thermal cleanse

Markwik 21+ / 21+ Comfort SQ mixers are designed for thermal cleansing and equipped with a built-in thermal cleansing feature. This allows the maximum blend temperature stop to be overridden, using the hot water supply temperature in the system, for the most effective cleansing process possible.

Hydropurge

The Hydropurge system in Markwik 21+ / 21+ Comfort SQ mixers flushes any debris and waste that gets into the system during installation, reducing the high risk of contamination when new facilities are opened. The same port can be used for inlet water sampling. Use the **Markwik 21+ purging kit (A6898NU)** for 2-hole thermostatic mixers.

Antimicrobial outlets

Traditional outlets have flow straighteners that can become contaminated over time and provide a haven for harmful bacteria. Markwik 21+ / 21+ Comfort SQ mixers feature BioGuard, a patented copper-lined outlet that helps prevent Biofilm attachment and reduces the risk of pseudomonas infection. All Markwik 21+ / 21+ Comfort SQ mixers are compatible with Pall Medical filters, so sterilising-grade water can be made available on demand.

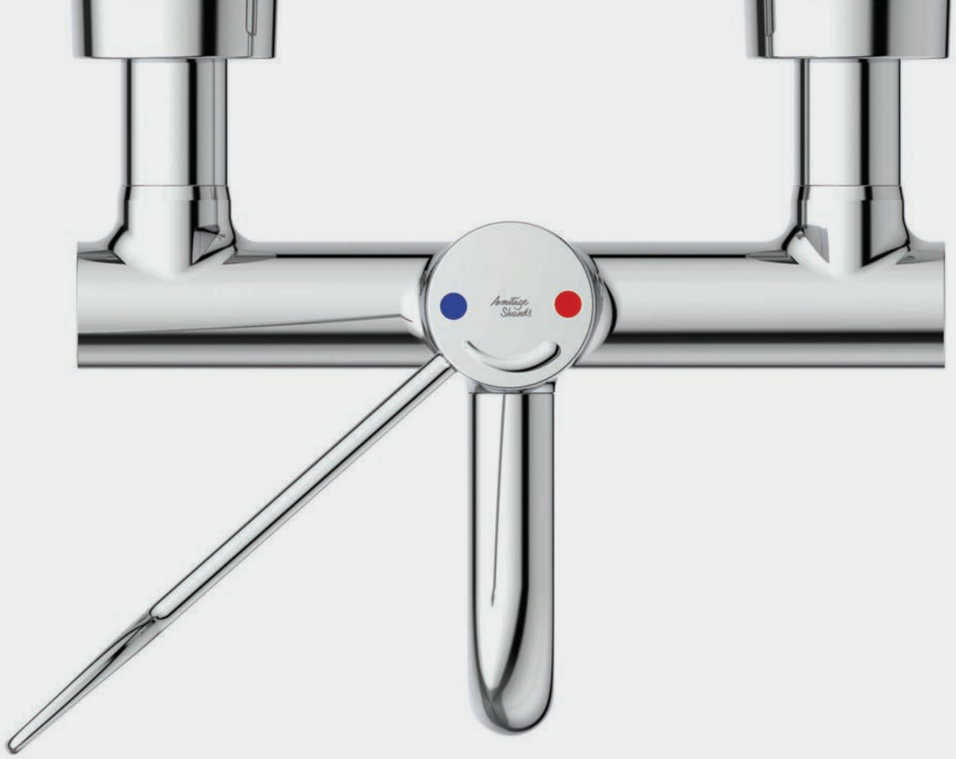

Where it all comes together.

Singular™ from Ideal Standard

Armitage Shanks has unrivalled expertise in healthcare sanitaryware and fittings, with products designed to maximise patient safety and practicality while minimising infection risk.

As part of the Ideal Standard group, Armitage Shanks follow the Singular™ approach, ensuring all our products work together seamlessly to make specifying solutions for the healthcare sector simpler. Those products are the result of being leaders in performance, combining our experience and expertise to deliver innovations that set new standards in washrooms and bathrooms – as does the Markwik 21+ Comfort SQ PBV mixer tap.

Switching is easy & cost-effective.

If you're currently using Markwik 21+ or 21 two-hole panel mounted or deck mounted thermostatic mixers and need to switch to a new Comfort SQ PBV mixer, it couldn't be simpler.

The new tap has been designed to be a 'plug and play' solution for existing Markwik 21+ or 21 users, with existing handles and detachable spouts being re-used* – so you only need order the required components rather than paying for a full new tap.**

Scan the code to see just how easy making the change can be.

* Subject to the Markwik model being replaced

** For details of replacement body-only kits, refer to table on pages 14-15.

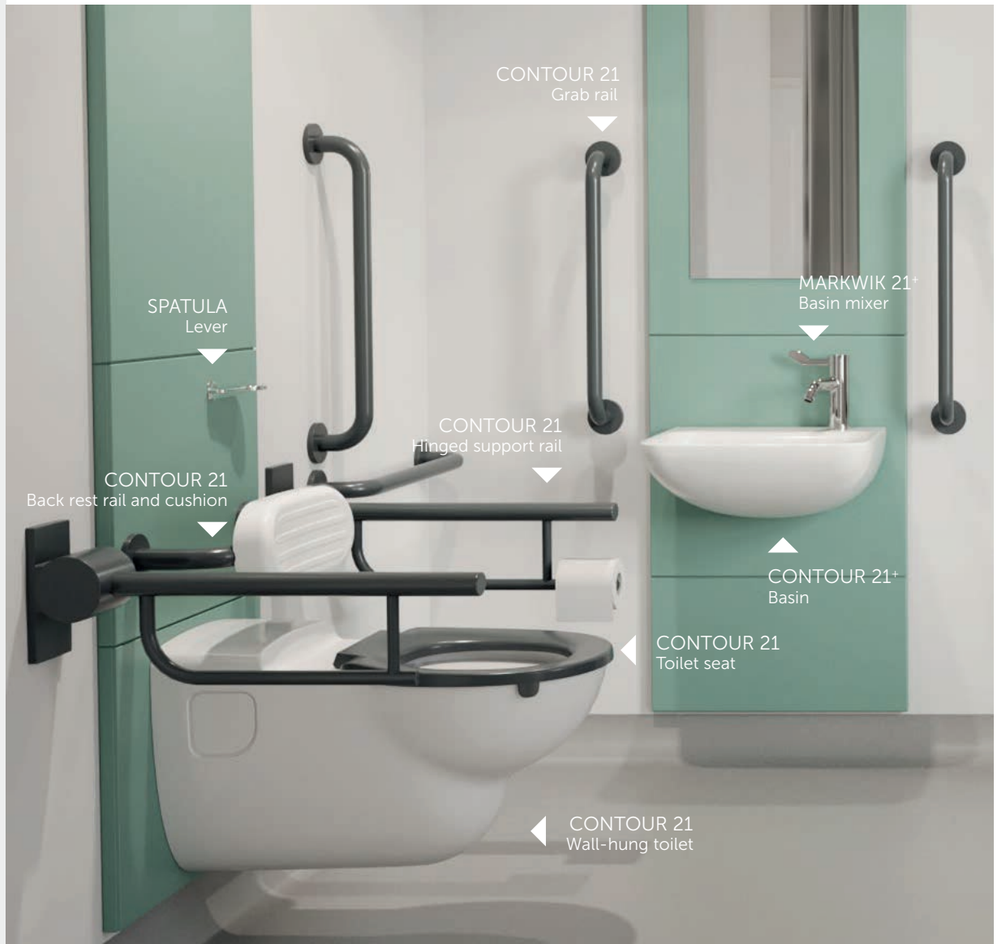

Markwik 21+ Comfort SQ key features.

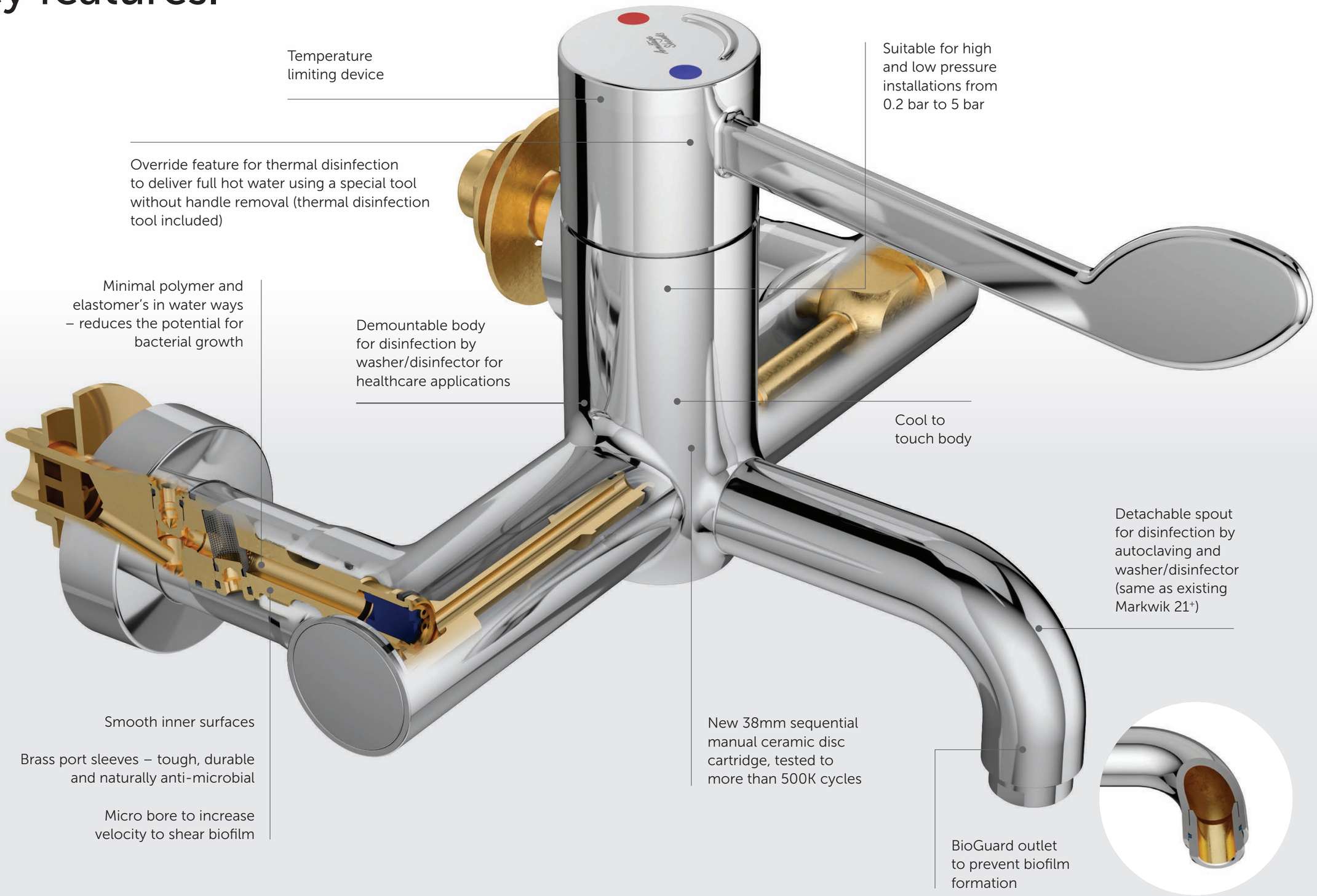

Technical Specifications.

The Markwik 21⁺ Comfort Sequential PBV tap is available as a complete unit or as a conversion body-only model, for both panel mounted and basin-deck mounted options.

COMPLETE TAP MODELS

A7909AA Markwik 21⁺ Comfort SQ panel mounted model

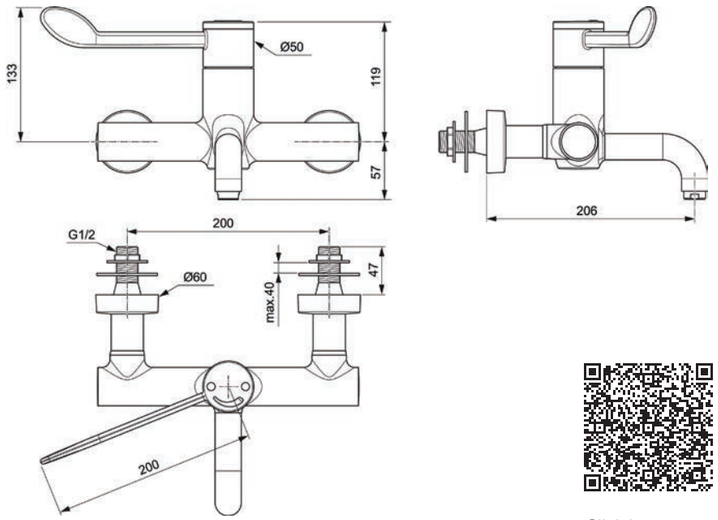

Click here or scan the code to see full technical information.

A7905AA
Markwik 21⁺ Comfort SQ deck mounted model

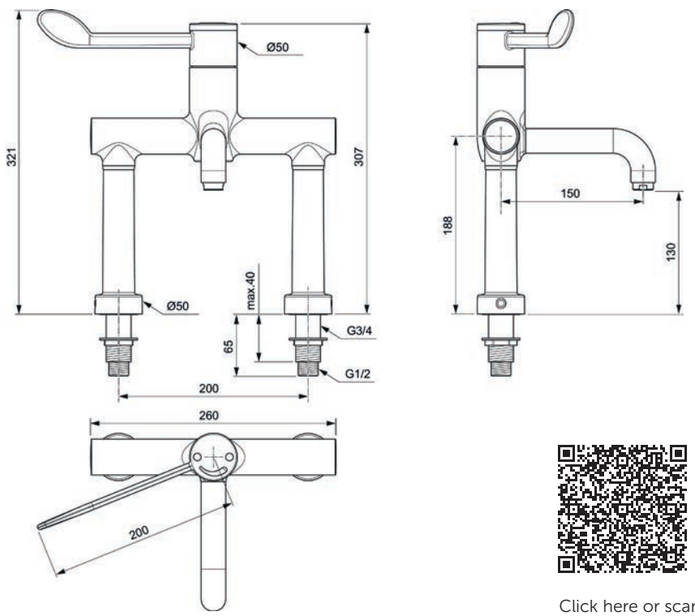

Click here or scan the code to see full technical information.

CONVERSION BODY-ONLY TAP MODELS

For conversion body-only models, refer to the table overleaf to see which parts are required for a simple switch-over.

A7910AA
Markwik 21⁺ Comfort SQ panel mounted body only model

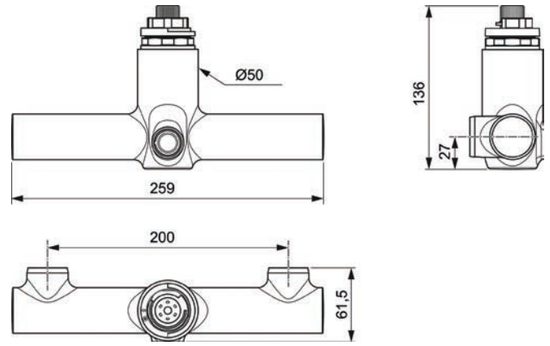

Click here or scan the code to see full technical information.

A7906AA
Markwik 21⁺ Comfort SQ deck mounted body only model

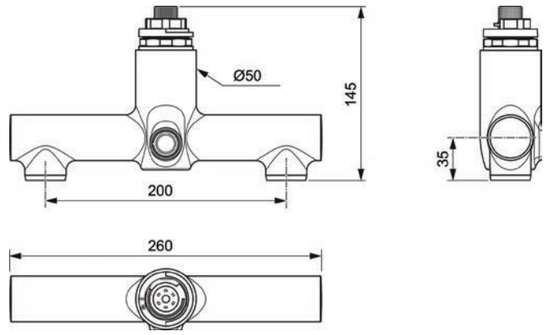

Click here or scan the code to see full technical information.

PARTS AND ACCESSORIES FOR CONVERSIONS

A861794AA
Markwik 21 conversion parts pack

A6250AA
135mm spout. (suitable for converting from Markwik 21⁺ 135mm fixed spout model A6735AA)

A6251AA
170mm spout. (suitable for converting from Markwik 21⁺ 170mm fixed spout model A6734AA)

Identification of Markwik 21 / Markwik 21⁺ for plug and play conversion.

Use the following chart to identify what items you need to order, to convert existing Markwik 21 or Markwik 21⁺ models to PBV installations. Current Markwik 21⁺ models with fixed spouts can be switched over by ordering a detachable spout along with the body only.

Does the current tap have an Armitage Shanks logo sitting within a central cover cap like the image to the left?

OR

Does the current tap have an Armitage Shanks logo that appears like the image to the left, without a central cover cap?

YES. THEN IT'S A MARKWIK 21

CURRENT TAP

- Deck Mounted
  - Detachable Spout
    - Markwik 21 Deck Mounted Thermostatic Mixer A6242AA
- Panel Mounted
  - Fixed Spout
    - Markwik 21 Panel Mounted Thermostatic Mixer A6060AA
  - Detachable Spout
    - Markwik 21 Panel Mounted Thermostatic Mixer with Detachable 135mm Spout A6243AA
    - Markwik 21 Panel Mounted Thermostatic Mixer with Detachable 100mm Spout A6711AA

PRODUCTS TO ORDER IF CONVERTING CURRENT MODEL

- Markwik 21⁺ Comfort SQ Deck Mounted PVB mixer A7906AA (Body Only)
  - Conversion Pack A861794AA Required in addition to A7906AA, when converting from an existing Markwik 21 installation. The pack includes a new handle to ensure thermal cleanse is feasible
  - ***Important Note***
    Detachable spout and inlet legs must be retained and re-used from existing installation
- Recommend Markwik 21⁺ Comfort SQ Panel Mounted PBV Mixer full tap A7909AA
- (Body Only) Markwik 21⁺ Comfort SQ Panel Mounted PBV Mixer A7910AA
  - Conversion Pack A861794AA Required in addition to a A7910AA, when converting from an existing Markwik 21 installation. The pack includes a new handle to ensure thermal cleanse is feasible
  - ***Important Note***
    Detachable spout must be retained and re-used from existing installation

YES. THEN IT'S A MARKWIK 21⁺

CURRENT TAP

- Deck Mounted
  - Fixed Spout
    - Markwik 21⁺ Deck Mounted Thermostatic Mixer A6734AA
- Panel Mounted
  - Fixed Spout
    - Markwik 21⁺ Panel Mounted Thermostatic Mixer A6735AA
  - Detachable Spout
    - Markwik 21⁺ Panel Mounted Thermostatic Mixer A6682AA

PRODUCTS TO ORDER IF CONVERTING CURRENT MODEL

- Markwik 21⁺ Comfort SQ Deck Mounted PBV Mixer A7906AA (Body Only)
  - 170mm Spout A6251AA
  - ***Important Note***
    Detachable handle and inlet legs must be retained and re-used from existing installation
- Markwik 21⁺ Comfort SQ Panel Mounted PBV Mixer A7910AA (Body only)
  - 135mm Spout A6250AA
  - ***Important Note***
    Detachable handle must be retained and re-used from existing installation.
- Markwik 21⁺ Comfort SQ Panel Mounted PBV Mixer A7910AA (Body only)
  - ***Important Note***
    Detachable spout and handle must be retained and re-used from existing installation

Armitage Shanks Armitage, Rugeley, Staffordshire, WS15 4BT
T. 01543 490253 | F. 01543 491677

Armitage Shanks Dublin Ltd 3013 Lake Drive, Citywest Business Campus, Dublin 24
T. 003531 456 4525

WWW.IDEALSPEC.CO.UK
WWW.IDEALSTANDARD.CO.UK
WWW.IDEALSTANDARD.IE

Armitage Shanks

Part of the Ideal Standard Group.