GEMÜ 652

Pulsation damper

EN **Operating instructions**

further information
webcode: GW-652

All rights including copyrights or industrial property rights are expressly reserved.

Keep the document for future reference.

© GEMÜ Gebr. Müller Apparatebau GmbH & Co. KG
16.12.2022

Contents

1 General information 4
1.1 Information 4
1.2 Symbols used 4
1.3 Definition of terms 4
1.4 Warning notes 4
2 Safety information 5
3 Product description 5
3.1 Construction 5
3.2 Description 6
3.3 Function 6
3.4 Product label 6
4 GEMÜ CONEXO 7
5 Correct use 7
6 Order data 8
6.1 Order codes 8
6.2 Order example 9
7 Technical data 10
7.1 Medium 10
7.2 Temperature 10
7.3 Pressure 11
7.4 Product conformity 12
7.5 Mechanical data 12
8 Dimensions 13
8.1 Actuator dimensions 13
8.2 Body dimensions 14
9 Manufacturer's information 16
9.1 Delivery 16
9.2 Packaging 16
9.3 Transport 16
9.4 Storage 16
10 Installation in piping 16
10.1 Preparing for installation 16
10.2 Installation position 17
10.3 Installation with butt weld spigots 17
10.4 After the installation 17
10.5 Optical position indicator 17
10.6 Optimized draining of valves 17
11 Pneumatic connections 18
11.1 Control function 18
11.1.1 Zero and working positions 19
11.2 Connecting the control medium 19
12 Commissioning 19
13 Troubleshooting 20
14 Inspection and maintenance 21
14.1 Spare parts 21
14.1.1 Spare parts MG 25, MG 40, MG 50 .. 21
14.1.1 Spare parts MG 80 21
14.2 Cleaning the product 21
14.3 Assembly/disassembly of spare parts 22
15 Removal from piping 23
16 Disposal 23
17 Returns 23
18 EU Declaration of Incorporation according to the EC Machinery Directive 2006/42/EC 24
19 EU Declaration of Conformity in accordance with 2014/68/EU (Pressure Equipment Directive) 25

1 General information

1.1 Information

- The descriptions and instructions apply to the standard versions. For special versions not described in this document the basic information contained herein applies in combination with any additional special documentation.
- Correct installation, operation, maintenance and repair work ensure faultless operation of the product.
- Should there be any doubts or misunderstandings, the German version is the authoritative document.
- Contact us at the address on the last page for staff training information.
- A supplement to Directive 2014/34/EU (ATEX Directive) is included with the product, provided that it was ordered in accordance with ATEX.

1.2 Symbols used

The following symbols are used in this document:

Symbol	Meaning
●	Tasks to be performed
▶	Response(s) to tasks
–	Lists

1.3 Definition of terms

Working medium

The medium that flows through the GEMÜ product.

Diaphragm size

Uniform seat size of GEMÜ diaphragm valves for different nominal sizes.

Control function

The possible actuation functions of the GEMÜ product.

Control medium

The medium whose increasing or decreasing pressure causes the GEMÜ product to be actuated and operated.

1.4 Warning notes

Wherever possible, warning notes are organised according to the following scheme:

SIGNAL WORD	
Possible symbol for the specific danger	Type and source of the danger ▶ Possible consequences of non-observance. ● Measures for avoiding danger.

Warning notes are always marked with a signal word and sometimes also with a symbol for the specific danger.

The following signal words and danger levels are used:

⚠ DANGER

Imminent danger!

▶ Non-observance can cause death or severe injury.

⚠ WARNING

Potentially dangerous situation!

▶ Non-observance can cause death or severe injury.

⚠ CAUTION

Potentially dangerous situation!

▶ Non-observance can cause moderate to light injury.

NOTICE

Potentially dangerous situation!

▶ Non-observance can cause damage to property.

The following symbols for the specific dangers can be used within a warning note:

Symbol	Meaning
	Danger - corrosive materials
	Danger - hot surfaces

2 Safety information

The safety information in this document refers only to an individual product. Potentially dangerous conditions can arise in combination with other plant components, which need to be considered on the basis of a risk analysis. The operator is responsible for the production of the risk analysis and for compliance with the resulting precautionary measures and regional safety regulations.

The document contains fundamental safety information that must be observed during commissioning, operation and maintenance. Non-compliance with these instructions may cause:

- Personal hazard due to electrical, mechanical and chemical effects.
- Hazard to nearby equipment.
- Failure of important functions.
- Hazard to the environment due to the leakage of dangerous substances.

The safety information does not take into account:

- Unexpected incidents and events, which may occur during installation, operation and maintenance.
- Local safety regulations which must be adhered to by the operator and by any additional installation personnel.

Prior to commissioning:

1. Transport and store the product correctly.
2. Do not paint the screws and plastic parts of the product.
3. Carry out installation and commissioning using trained personnel.
4. Provide adequate training for installation and operating personnel.
5. Ensure that the contents of the document have been fully understood by the responsible personnel.
6. Define the areas of responsibility.
7. Observe the safety data sheets.
8. Observe the safety regulations for the media used.

During operation:

9. Keep this document available at the place of use.
10. Observe the safety information.
11. Operate the product in accordance with this document.
12. Operate the product in accordance with the specifications.
13. Maintain the product correctly.
14. Do not carry out any maintenance work and repairs not described in this document without consulting the manufacturer first.

In cases of uncertainty:

15. Consult the nearest GEMÜ sales office.

3 Product description

3.1 Construction

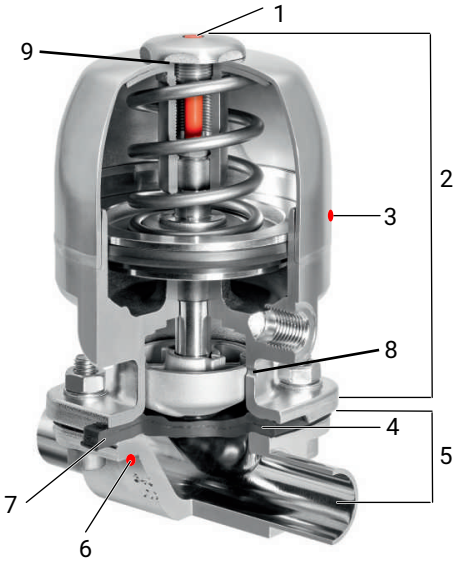

Item	Name	Materials
1	Optical position indicator	PP
2	Actuator	Stainless steel
3	CONEXO actuator RFID chip (see “GEMÜ CONEXO“, page 7)	
4	Diaphragm	EPDM, PTFE/EPDM
5	Valve body	1.4435 (F316L), forged body 1.4435 (BN2), forged body, Δ Fe < 0.5% 1.4539, forged body
6	CONEXO body RFID chip (see “GEMÜ CONEXO“, page 7)	
7	CONEXO diaphragm RFID chip (see “GEMÜ CONEXO“, page 7)	
8	Leak detection hole	
9	Vent hole	

3.2 Description

The GEMÜ 652 pulsation damper is designed for use with liquid and gaseous media in sterile areas of application. In many production plants, unwanted pressure surges arise which are generated by switching on pumps or quickly switching valves, for example. In addition, pressure surges may cause unwanted momentary opening of shut-off valves, thus contaminating media. Likewise, an increased pressure may arise in the medium pipe due to thermal expansion of the medium. This can cause damage to plant components such as filters, sensors or piping. As a solution to this GEMÜ has developed the pulsation damper GEMÜ 652 , which is based on the proven diaphragm valve technology and is designed so that it releases a volume in a particular pre-defined pressure surge area, and consequently catches and compensates for the pressure surge. The valve body is open in-line with flow direction, and not intended to shut off the medium.

3.3 Function

The GEMÜ 652 pulsation damper is usually installed in piping in order to compensate for pressure surges or else thermal expansions of the medium. The product has a piston actuator and an optical position indicator as standard.

All actuator parts including closing springs (except seals) are made from stainless steel. In diaphragm size 80, the compression springs consist of epoxy coated spring steel. The product is pushed by the spring force in the direction of the pipe, and releases the corresponding compensation volume, depending on version, pressure surge or thermal expansion. The product body and the diaphragm are available in various designs in accordance with the datasheet. The product can be cleaned (CIP) and sterilized (SIP) without disassembly, and is autoclavable (depending on version).

Electrical position indicators are available as accessories.

3.4 Product label

The product label is located on the actuator. Product label data (example):

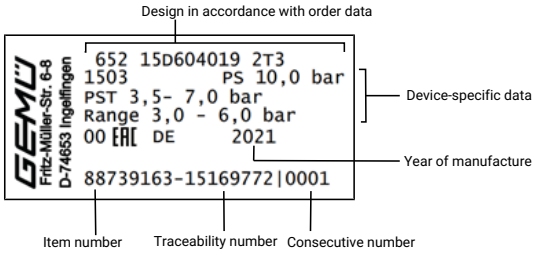

The month of manufacture is encoded in the traceability number and can be obtained from GEMÜ. The product was manufactured in Germany.

4 GEMÜ CONEXO

Processing industry 4.0 – Traceability and service

Fig. 1: Product with RFID transponders

Description

You can use the GEMÜ CONEXO pen to read and process identification data from devices and components. In conjunction with the GEMÜ CONEXO app for maintenance technicians, field data can be collected, processed, and managed and archived centrally via the GEMÜ CONEXO portal.

Features

- Captive electronic identification of the valve body, actuator and diaphragm
- Simplified identification and inventory of devices in the field
- Traceability of the components by providing the serial number
- Electronic supply of product and project-specific documentation
- Optimized maintenance processes thanks to a maintenance log book and photo documentation

Technical specifications – CONEXO PEN:

- Mobile RFID reading device in the form of a pen
- Bluetooth coupling to mobile end devices
- Stylus for touchscreens (smartphone and tablet)
- UHF signal processing

Technical specifications – CONEXO APP:

- Service software for more efficient maintenance
- Available for tablets and smartphones that have the Android or iOS operating system
- High security standards implemented in portal-reader communication
- Workflow template for customizing the maintenance process
- Electronically supported diaphragm assessment and photo documentation

Technical specifications – CONEXO PORTAL:

- Integrated service functions and remote support
- Portable server application with database for Industry 4.0
- Interfaces to maintenance and ERP systems
- High level of IT security thanks to access rights and encrypted data
- Open system (option to integrate third-party devices)

5 Correct use

⚠ DANGER

Danger of explosion!

- ► Risk of severe injury or death.
- ● Do not use the product in potentially explosive zones.
- ● Only use the product in potentially explosive zones confirmed in the declaration of conformity.

⚠ WARNING

Improper use of the product!

- ► Risk of severe injury or death.
- ► Manufacturer liability and guarantee will be void.
- ● Only use the product in accordance with the operating conditions specified in the contract documentation and in this document.

The product is designed for installation in piping. In the event of pressure surges or medium expansion, it releases a certain volume range so as to enable pressure compensation.

1. Use the product in accordance with the technical data.
2. Note the supplement acc. to ATEX

6 Order data

The order data provide an overview of standard configurations.

Please check the availability before ordering. Other configurations available on request.

Order codes

1 Type	Code
Pulsation damper, stainless steel piston actuator, electropolished, optical position indicator	652

2 DN	Code
DN 15	15
DN 20	20
DN 25	25
DN 32	32
DN 40	40
DN 50	50
DN 65	65
DN 80	80

3 Body configuration	Code
2/2-way body	D

4 Connection type	Code
Spigot	
Spigot EN 10357 series A (formerly DIN 11850 series 2)/DIN 11866 series A	17
Spigot ASME BPE/DIN 11866 series C	59
Spigot ISO 1127/EN 10357 series C/DIN 11866 series B	60

5 Valve body material	Code
Forged material	
1.4435 (F316L), forged body	40
1.4435 (BN2), forged body, Δ Fe < 0.5%	42
1.4539, forged body	F4

6 Diaphragm material	Code
EPDM	17
EPDM	19
PTFE/EPDM one-piece	54

7 Actuator version	Code
Actuator size 2T1	2T1
Actuator size 2T2	2T2
Actuator size 2T3	2T3
Actuator size 3T1	3T1
Actuator size 3T2	3T2
Actuator size 3T3	3T3
Actuator size 3T4	3T4
Actuator size 3T5	3T5
Actuator size 4T1	4T1
Actuator size 4T2	4T2
Actuator size 4T3	4T3
Actuator size 4T4	4T4
Actuator size 4T5	4T5

7 Actuator version	Code
Actuator size 5T1	5T1
Actuator size 5T2	5T2
Actuator size 5T3	5T3
Actuator size 5T4	5T4
Actuator size 5T5	5T5
Actuator size 5T6	5T6

8 Surface	Code
Ra ≤ 0.8 µm (30 µin.) for media wetted surfaces, in accordance with DIN 11866 H3, mechanically polished internal	1502
Ra ≤ 0.8 µm (30 µin.) for media wetted surfaces, in accordance with DIN 11866 HE3, electropolished internal/external	1503
Ra ≤ 0.6 µm (25 µin.) for media wetted surfaces, mechanically polished internal	1507
Ra ≤ 0.6 µm (25 µin.) for media wetted surfaces, electropolished internal/external	1508
Ra ≤ 0.4 µm (15 µin.) for media wetted surfaces, in accordance with DIN 11866 H4, mechanically polished internal	1536
Ra ≤ 0.4 µm (15 µin.) for media wetted surfaces, in accordance with DIN 11866 HE4, electropolished internal/external	1537
Ra ≤ 0.25 µm (10 µin.) for media wetted surfaces *), in accordance with DIN 11866 H5, mechanically polished internal, *) for inner pipe diameters < 6 mm, in the spigot Ra ≤ 0.38 µm	1527
Ra ≤ 0.25 µm (10 µin.) for media wetted surfaces *), in accordance with DIN 11866 HE5, electropolished internal/external, *) for inner pipe diameters < 6 mm, in the spigot Ra ≤ 0.38 µm	1516
Ra max. 0.51 µm (20 µin.) for media wetted surfaces, in accordance with ASME BPE SF1, mechanically polished internal	SF1
Ra max. 0.64 µm (25 µin.) for media wetted surfaces, in accordance with ASME BPE SF2, mechanically polished internal	SF2
Ra max. 0.76 µm (30 µin.) for media wetted surfaces, in accordance with ASME BPE SF3, mechanically polished internal	SF3
Ra max. 0.38 µm (15 µin.) for media wetted surfaces, in accordance with ASME BPE SF4, electropolished internal/external	SF4
Ra max. 0.51 µm (20 µin.) for media wetted surfaces, in accordance with ASME BPE SF5, electropolished internal/external	SF5
Ra max. 0.64 µm (25 µin.) for media wetted surfaces, in accordance with ASME BPE SF6, electropolished internal/external	SF6

9 CONEXO	Code
Without	

9 CONEXO	Code
Integrated RFID chip for electronic identification and traceability	C

Order example

Ordering option	Code	Description
1 Type	652	Pulsation damper, stainless steel piston actuator, electropolished, optical position indicator
2 DN	50	DN 50
3 Body configuration	D	2/2-way body
4 Connection type	60	Spigot ISO 1127/EN 10357 series C/DIN 11866 series B
5 Valve body material	40	1.4435 (F316L), forged body
6 Diaphragm material	17	EPDM
7 Actuator version	4T1	Actuator size 4T1
8 Surface	1508	Ra ≤ 0.6 µm (25 µin.) for media wetted surfaces, electropolished internal/external
9 CONEXO		Without

7 Technical data

7.1 Medium

Working medium: Corrosive, inert, gaseous and liquid media which have no negative impact on the physical and chemical properties of the body and diaphragm material.

Control medium: Inert gases

Connection of the control medium is only required for diaphragm replacement. Under normal working conditions, control air is not required.

7.2 Temperature

Media temperature: -10 — 100 °C

Sterilization temperature:

EPDM (Code 17)	max. 150 °C, max. 180 min per cycle
EPDM (Code 19)	max. 150 °C, max. 180 min per cycle
PTFE/EPDM (Code 54)	max. 150 °C, permanent temperature per cycle

The sterilization temperature is only valid for steam (saturated steam) or superheated water.
If the sterilization temperatures listed above are applied to the EPDM diaphragms for longer periods of time, the service life of the diaphragms will be reduced. In these cases, maintenance cycles must be adapted accordingly.
This also applies to PTFE diaphragms exposed to high temperature fluctuations. The maintenance cycles must be adapted accordingly.

Control medium temperature: 0 — 60 °C

Ambient temperature: 0 — 60 °C

Autoclavability:

Actuator version	Autoclavability
2T1, 2T2, 2T3	Autoclavable
3T1, 3T2, 3T3, 3T4, 3T5	with special version
4T1, 4T2, 4T3, 4T4, 4T5	
5T1, 5T2, 5T3, 5T4, 5T5, 5T6	

7.3 Pressure

Operating pressure: 0 — 10 bar

The external leak tightness is ensured up to the specified operating pressure. The pressure ranges for compensation can be seen in the following table (operating range).

Operating range:

MG	AG	Diaphragm material				
		EPDM				PTFE/EPDM
		Code 17 [bar]	Code 19 [bar]	max. displaced volume [ml]	Code 54 [bar]	max. displaced volume [ml]
25	**2T1**	4.0 – 6.0	4.0 – 6.0	8	4.0 – 6.0	8
	2T2	4.5 – 8.0	6.0 – 8.0	10	4.0 – 8.0	10
	2T3	5.5 - 9.5	7.0 - 9.5	9	4.5 - 9.5	9
40	**3T1**	2.5 - 7.0	2.5 - 7.0	30	2.0 - 7.0	27
	3T2	2.5 - 7.0	3.0 - 7.0	28	2.0 - 7.0	28
	3T3	3.5 - 8.0	3.5 - 8.0	29	3.0 - 8.0	29
	3T4	5.5 - 10.0	5.5 - 10.0	25	4.5 - 10.0	24
	3T5	7.5 - 10.0	7.5 - 10.0	17	6.5 - 10.0	17
50	**4T1**	2.0 - 6.0	2.5 - 6.0	55	1.5 - 6.0	55
	4T2	3.0 - 8.5	3.5 - 8.5	61	2.5 - 9.0	62
	4T3	5.0 - 10.0	5.5 - 10.0	52	4.0 - 10.0	51
	4T4	5.5 - 10.0	5.5 - 10.0	51	4.5 - 10.0	49
	4T5	7.5 - 10.0	7.5 - 10.0	23	6.5 - 10.0	29
80	**5T1**	1.5 - 7.5	1.5 - 7.5	282	1.5 - 7.5	230
	5T2	2.0 - 10.0	2.5 - 10.0	290	2.0 - 10.0	260
	5T3	3.5 - 10.0	3.5 - 10.0	250	3.5 - 10.0	225
	5T4	4.0 - 10.0	4.5 - 10.0	220	4.0 - 10.0	175
	5T5	5.0 - 10.0	5.5 - 10.0	168	4.5 - 10.0	129
	5T6	6.0 - 10.0	6.5 - 10.0	130	5.5 - 10.0	75

MG = diaphragm size

The normal operating pressure in the plant should be as close as possible to the lower area of the operating range of the pulsation damper.

Pressure rating: PN 16

Control pressure: **Note:** A control medium is only required for diaphragm replacement.

Actuator version 2T	2.5 — 7 bar
Actuator version 3T	3.5 — 7 bar
Actuator version 4T	3.5 — 7 bar
Actuator version 5T	3.5 — 7 bar

Kv values: The Kv values cannot be specified as with GEMÜ diaphragm valves. The basis of the Kv values is piping of the relevant standard of the connection type. In general, the Kv values are up to 10% less than those of comparable piping due to flow turbulences in the seat area.

7.4 Product conformity

Pressure Equipment Directive: 2014/68/EU

Machinery Directive: 2006/42/EC

Food: Regulation (EC) No. 1935/2004
Regulation (EC) No. 10/2011
FDA
USP Class VI

7.5 Mechanical data

Weight:

Actuator

Actuator size	Weight
2T1, 2T2, 2T3	2.3
3T1, 3T2, 3T3, 3T4, 3T5	4.7
4T1, 4T2, 4T3, 4T4, 4T5	9.2
5T1, 5T2, 5T3, 5T4, 5T5, 5T6	20.6

Weights in kg

Body

Connection type code		17	59	60
Valve body		Spigot		
MG	DN			
25	**15**	0.65	-	0.62
	20	0.60	0.63	0.52
	25	0.50	0.55	0.41
40	**32**	1.40	-	1.20
	40	1.20	1.30	0.90
50	**50**	2.10	2.20	1.60
	65	-	1.30	-
80	**65**	7.50	8.00	6.30
	80	5.00	6.50	4.80

MG = diaphragm size, weight in kg

8 Dimensions

8.1 Actuator dimensions

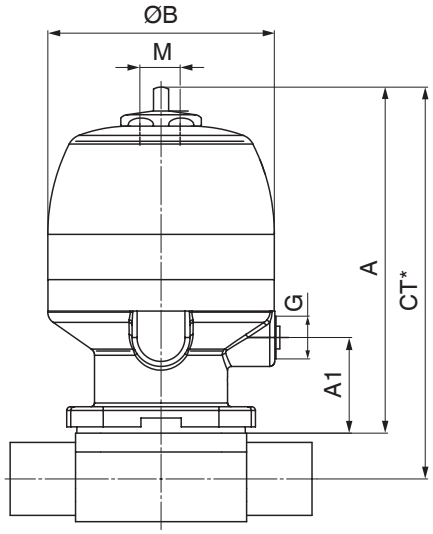

*CT = A + H1
(see body dimensions)

MG	DN	Actuator version	A	A1	ø B	G	M
25	**15, 20, 25**	2T1, 2T2, 2T3	137.5	38.0	90.0	G 1/4	M16x1
40	**32, 40**	3T1, 3T2, 3T3, 3T4, 3T5	173.0	53.0	114.0	G 1/4	M16x1
50	**50, 65**	4T1, 4T2, 4T3, 4T4, 4T5	223.0	52.0	144.0	G 1/4	M16x1
80	**65, 80**	5T1, 5T2, 5T3, 5T4, 5T5, 5T6	283.0	78.0	240.0	G 1/4	M26x1.5

Dimensions in mm, MG = diaphragm size

8.2 Body dimensions

8.2.1 Spigot DIN/EN/ISO (code 17, 60)

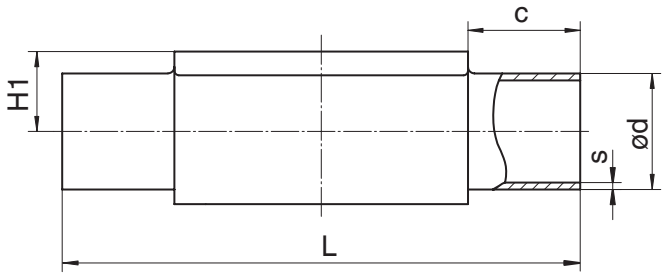

Connection type spigot DIN/EN/ISO (code 17, 60) [1], forged material (code 40, 42, F4) [2]

MG	DN	NPS	c (min)	ød		s		H1		L
				Connection type		Connection type		Connection type		
				17	60	17	60	17	60	
25	**15**	**1/2"**	25.0	19.0	21.3	1.5	1.6	14,1	13,2	120.0
	20	**3/4"**	25.0	23.0	26.9	1.5	1.6	14,1	16,0	120.0
	25	**1"**	25.0	29.0	33.7	1.5	2.0	17,1	18,8	120.0
40	**32**	**1¼"**	25.0	35.0	42.4	1.5	2.0	20,3	23,5	153.0
	40	**1½"**	25.0	41.0	48.3	1.5	2.0	23,3	26,5	153.0
50	**50**	**2"**	30.0	53.0	60.3	1.5	2.0	29,3	32,5	173.0
80	**65**	**2½"**	30.0	70.0	76.1	2.0	2.0	51,3	54,4	216.0
	80	**3"**	30.0	85.0	88.9	2.0	2.3	58,8	60,5	254.0

Dimensions in mm
MG = diaphragm size

1) **Connection type**
Code 17: Spigot EN 10357 series A (formerly DIN 11850 series 2)/DIN 11866 series A
Code 60: Spigot ISO 1127/EN 10357 series C/DIN 11866 series B

2) **Valve body material**
Code 40: 1.4435 (F316L), forged body
Code 42: 1.4435 (BN2), forged body, Δ Fe < 0.5%
Code F4: 1.4539, forged body

8.2.2 Spigot ASME/BS (code 59)

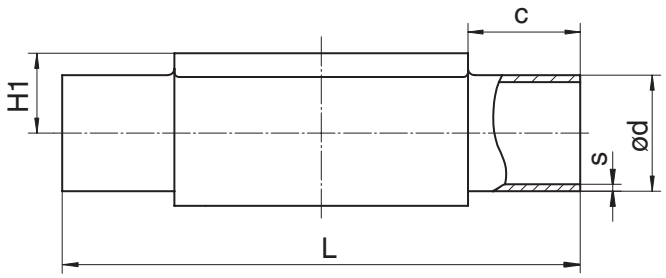

Connection type spigot ASME/BS (code 59) [1], forged material (code 40, 42, F4) [2]

MG	DN	NPS	c (min)	ød	s	H1	L
25	**20**	**3/4"**	25.0	19.05	1.65	14,0	120.0
	25	**1"**	25.0	25.40	1.65	15,2	120.0
40	**40**	**1½"**	25.0	38.10	1.65	21,7	153.0
50	**50**	**2"**	30.0	50.80	1.65	28,1	173.0
	65	**2½"**	30.0	63.50	1.65	34,0	173.0
80	**65**	**2½"**	30.0	63.50	1.65	48,4	216.0
	80	**3"**	30.0	76.20	1.65	54,8	254.0

Dimensions in mm
MG = diaphragm size

1) **Connection type**
Code 59: Spigot ASME BPE/DIN 11866 series C

2) **Valve body material**
Code 40: 1.4435 (F316L), forged body
Code 42: 1.4435 (BN2), forged body, Δ Fe < 0.5%
Code F4: 1.4539, forged body

9 Manufacturer's information

9.1 Delivery

- Check that all parts are present and check for any damage immediately upon receipt.

The product's performance is tested at the factory. The scope of delivery is apparent from the dispatch documents and the design from the order number.

Control function	Function	Condition as supplied to customer
1	Normally closed (NC)	closed

9.2 Packaging

The product is packaged in a cardboard box which can be recycled as paper.

9.3 Transport

1. Only transport the product by suitable means. Do not drop. Handle carefully.
2. After the installation dispose of transport packaging material according to relevant local or national disposal regulations / environmental protection laws.

9.4 Storage

1. Store the product free from dust and moisture in its original packaging.
2. Avoid UV rays and direct sunlight.
3. Maximum storage temperature: 40 °C
4. Do not store solvents, chemicals, acids, fuels or similar fluids in the same room as pulsation dampers and their spare parts.

10 Installation in piping

10.1 Preparing for installation

⚠ WARNING

The equipment is subject to pressure!

- ► Risk of severe injury or death.
- Depressurize the plant.
- Completely drain the plant.

⚠ WARNING

Corrosive chemicals!

- ► Risk of caustic burns.
- Wear suitable protective gear.
- Completely drain the plant.

⚠ CAUTION

Hot plant components!

- ► Risk of burns.
- Only work on plant that has cooled down.

⚠ CAUTION

Maximum permissible pressure exceeded.

- ► Damage to the product.
- Provide for precautionary measures against exceeding the maximum permissible pressure

⚠ CAUTION

Use as step.

- ► Damage to the product.
- ► Risk of slipping-off.
- Choose the installation location so that the product cannot be used as a foothold.
- Do not use the product as a step or a foothold.

⚠ CAUTION

Leakage

- ► Emission of dangerous substances.
- Provide for precautionary measures against exceeding the maximum permissible pressure.

NOTICE

Suitability of the product!

- ► The product must be appropriate for the piping system operating conditions (medium, medium concentration, temperature and pressure) and the prevailing ambient conditions.

NOTICE

Tools

- ► The tools required for installation and assembly are not included in the scope of delivery.
- ● Use appropriate, functional and safe tools.

1. Ensure the product is suitable for the relevant application.
2. Check the technical data of the product and the materials.
3. Keep appropriate tools ready.
4. Wear appropriate protective gear as specified in the plant operator's guidelines.
5. Observe appropriate regulations for connections.
6. Have installation work carried out by trained personnel.
7. Shut off plant or plant component.
8. Secure the plant or plant component against recommissioning.
9. Depressurize the plant or plant component.
10. Completely drain the plant or plant component and allow it to cool down until the temperature is below the media vaporization temperature and cannot cause scalding.
11. Correctly decontaminate, rinse and ventilate the plant or plant component.
12. Lay piping so that the product is protected against transverse and bending forces, and also from vibrations and tension.
13. Only install the product between matching aligned pipes (see chapters below).
14. Optional flow direction.
15. Please note the installation position (see chapter "Installation position").

10.2 Installation position

For the installation position of the product, observe the chapter "Optimized draining of valves".

10.3 Installation with butt weld spigots

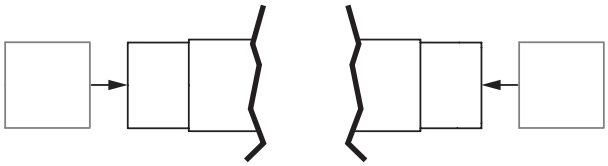

Fig. 2: Butt weld spigots

1. Carry out preparations for installation (see chapter "Preparing for installation").
2. Adhere to good welding practices!
3. Disassemble the actuator with the diaphragm before welding in the valve body (see "Removing the actuator" chapter).
4. Weld the body of the product in the piping.

NOTICE

Angle of rotation

- ► Observe the angle of rotation (see “Optimized draining of valves“, page 17).

5. Allow butt weld spigots to cool down.
6. Reassemble the valve body and the actuator with diaphragm (see "Mounting the actuator" chapter).
7. Re-attach or reactivate all safety and protective devices.
8. Flush the system.

10.4 After the installation

- ● Re-attach or reactivate all safety and protective devices.

10.5 Optical position indicator

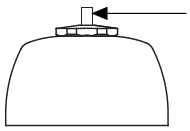

Pulsation damper open

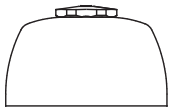

Pulsation damper closed

10.6 Optimized draining of valves

In specialist literature and documents from valve manufacturers and plant designers, the term "self-draining" is often used in conjunction with valves and plants or plant sections. This term is used to describe the residue-free and automatic draining of containers and piping with the valve opened. This draining depends on various factors. Even vertical piping with open ends does not guarantee complete and residue-free draining.

Correctly rotating or positioning diaphragm valve 2/2-way bodies results in the low points of the valve body internal contour lying on one plane and therefore is a prerequisite for optimized draining in horizontal piping.

The residue-free drainability and draining of a system and its components is nevertheless the responsibility of the plant designer, constructor and operator and is essentially dependent on the design and layout of the system.

Minimum 50° – 90°

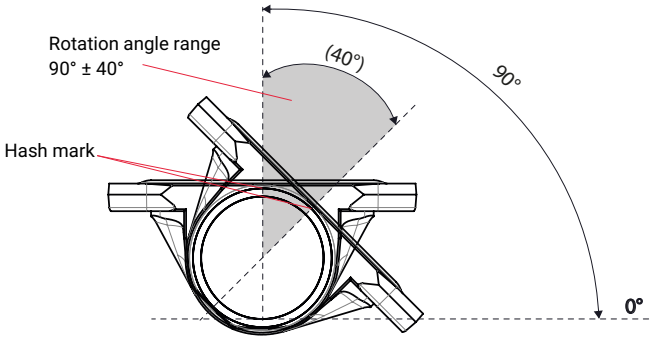

Rotation angle range for optimized draining for GEMÜ type 652

NOTICE

- Angle of rotation of GEMÜ 652 pulsation damper does not comply with the angle of rotation of standard forged bodies.

GEMÜ has theoretically determined a rotation angle range in order to facilitate installation of valves in horizontal piping for optimized draining. The residue-free drainability and draining of a system and its components is nevertheless the responsibility of the plant designer, constructor and operator and is essentially dependent on the design and layout of the system.

The angle of rotation is engraved on both sides of the bodies at 90°, which is referred to as the hash mark.

The hash marks enable simpler installation of the valve bodies in the system. The valve bodies have been positioned in a manner which is optimized for draining if the hash mark points vertically upwards, as shown in Figure 2. The vertical line shall therefore form the reference line for the hash mark.

Since GEMÜ 652 has a free flow path optimized draining is given in a range of 90° ± 40°.

11 Pneumatic connections

11.1 Control function

The following control function is available:

Control function 1: Normally closed (NC)

Resting position of the pulsation damper: In the zero position by spring force.
Activation of the actuator (connector 2) opens the pulsation damper.
When the actuator is vented, the pulsation damper is closed by spring force.

NOTICE

- Activating the pulsation damper is only required for diaphragm replacement.

Control function 1

Control function	Connector
	2
1 (NC)	+
+ = available (connector 2, see picture)	

In its resting position, the product is closed by spring force.

1. Activate the actuator via control medium connector 2.
   ⇨ The product opens.
2. Vent the actuator via control medium connector 2.
   ⇨ The product closes.

11.1.1 Zero and working positions

Zero position

Working position

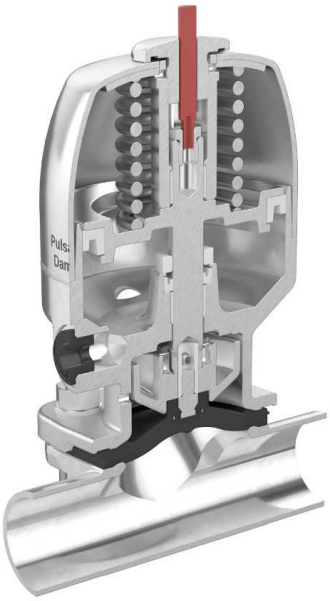

In the **zero position**, the diaphragm is pressed downwards.

In the **working position**, the volume to be compensated is released, for example in the event of a pressure surge.

11.2 Connecting the control medium

- Thread size of the control medium connectors:
  Diaphragm size 25–80: G1/4

1. Remove sealing plug.
2. Use suitable connectors.
3. Connect the control medium lines tension-free and without any bends or knots.
4. After diaphragm replacement, reassemble the sealing plug.

12 Commissioning

⚠ WARNING

Corrosive chemicals!

- ▶ Risk of caustic burns.
- ● Wear suitable protective gear.
- ● Completely drain the plant.

⚠ CAUTION

Leakage

- ▶ Emission of dangerous substances.
- ● Provide for precautionary measures against exceeding the maximum permissible pressure.

⚠ CAUTION

Cleaning agent

- ▶ Damage to the GEMÜ product.
- ● The plant operator is responsible for selecting the cleaning material and performing the procedure.

1. Check the tightness and the function of the product.
2. Flush the piping system of new plants and following repair work.

⇨ Harmful foreign matter has been removed.

⇨ The product is ready for use.

3. Commission the product.

13 Troubleshooting

Error	Error cause	Troubleshooting
Control medium escaping from vent hole / vent in the actuator cover for control function 1 (NC). Please note: Error can only occur during diaphragm replacement - no activation necessary during normal operation.	Piston faulty	Replace the actuator
Control medium escaping from leak detection hole	Spindle seal leaking	Replace the actuator and check control medium for impurities
Working medium escaping from leak detection hole	Shut off diaphragm faulty	Check shut off diaphragm for potential damage, replace diaphragm if necessary
The product is leaking between actuator and valve body	Shut off diaphragm incorrectly mounted	Remove the actuator, check the diaphragm mounting, replace the shut off diaphragm if necessary
	Bolting between valve body and actuator loose	Tighten bolting between valve body and actuator
	Shut off diaphragm faulty	Check shut off diaphragm for potential damage, replace the shut off diaphragm if necessary
	Actuator/valve body damaged	Replace actuator/valve body
Connection between valve body and piping leaking	Incorrect installation	Check installation of valve body in piping
	Threaded connections / unions loose	Tighten threaded connections / unions
	Sealing material faulty	Replace sealing material
Valve body leaking	Valve body leaking or corroded	Check valve body for damage, replace valve body if necessary

14 Inspection and maintenance

⚠ WARNING

The equipment is subject to pressure!

- ► Risk of severe injury or death.
- Depressurize the plant.
- Completely drain the plant.

⚠ CAUTION

Hot plant components!

- ► Risk of burns.
- Only work on plant that has cooled down.

⚠ CAUTION

- Servicing and maintenance work must only be performed by trained personnel.
- GEMÜ shall assume no liability whatsoever for damages caused by improper handling or third-party actions.
- In case of doubt, contact GEMÜ prior to commissioning.

NOTICE

Exceptional maintenance work!

- ► Damage to the GEMÜ product.
- Any maintenance work and repairs not described in these operating instructions must not be performed without consulting the manufacturer first.

The operator must carry out regular visual examination of the GEMÜ products dependent on the operating conditions and the potential danger in order to prevent leakage and damage.

The product also must be disassembled and checked for wear in the corresponding intervals.

1. Have servicing and maintenance work performed by trained personnel.
2. Wear appropriate protective gear as specified in plant operator's guidelines.
3. Shut off plant or plant component.
4. Secure the plant or plant component against recommissioning.
5. Depressurize the plant or plant component.
6. Actuate GEMÜ products which are always in the same position four times a year.

14.1 Spare parts

14.1.1 Spare parts MG 25, MG 40, MG 50

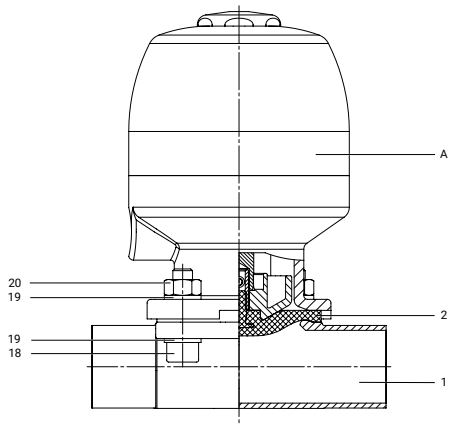

Item	Name	Order designation
A	Actuator	9652
2	Diaphragm	600 M
1	Body	K652
18,19, 20	Mounting set	652 S30

14.1.2 Spare parts MG 80

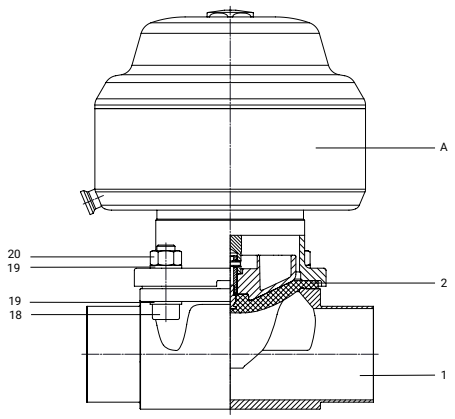

Item	Name	Order designation
A	Actuator	9652
2	Diaphragm	600 M
1	Body	K652
18,19, 20	Mounting set	652 S30

14.2 Cleaning the product

The pulsation damper can be cleaned (CIP) and sterilized (SIP) without being removed. The conditions in the "Technical data" chapter (operating, cleaning and sterilization media, temperatures) must be complied with.

14.3 Assembly/disassembly of spare parts

14.3.1 Pulsation damper disassembly (removing actuator from body)

1. Move the actuator A to the open position (see “Control function“, page 18).
2. Loosen the fastening elements between pulsation damper body **1** and actuator **A** diagonally and remove them.

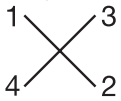

3. Lift actuator **A** off pulsation damper body **1**.
4. Move the actuator A to the closed position (see “Control function“, page 18).

NOTICE

Important:

► Clean all parts of contamination (do not damage the parts during cleaning) following removal. Check parts for potential damage; replace if necessary (only use genuine parts from GEMÜ).

14.3.2 Removing the diaphragm

NOTICE

► Before removing the diaphragm, remove the pulsation damper, see "Pulsation damper disassembly (removing actuator from body)".

1. Unscrew the diaphragm.
2. Clean all parts of contamination. Do not scratch or damage parts during cleaning!
3. Check all parts for potential damage.
4. Replace damaged parts.

14.3.3 Mounting the diaphragm

14.3.3.1 General information

NOTICE

► Install the diaphragm suitable for the pulsation damper (suitable for medium, medium concentration, temperature and pressure). The diaphragm is a wearing part. Check the technical condition and function of the pulsation damper prior to commissioning and during the whole duration of use. Carry out checks regularly and determine the check intervals in accordance with the conditions of use and/or the regulatory codes and provisions applicable for this application.

NOTICE

► Take care that the diaphragm is correctly installed, so as to ensure that the pulsation damper works.

NOTICE

► An incorrectly mounted diaphragm causes pulsation damper leakage/emission of medium. In this case, remove the diaphragm, check the complete pulsation damper and diaphragm and reassemble according to previous instructions.

Diaphragm size 25 to 80

Compressor (loose) and actuator flange seen from below:

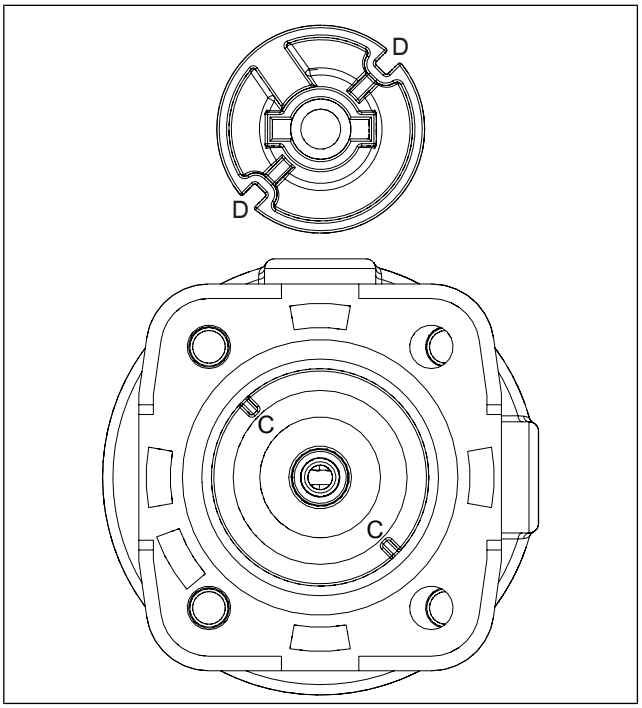

1. Place the compressor loosely on the actuator spindle.
2. Fit recesses **D** into guides **C**.

NOTICE

Type and source of the danger

► The compressor must be able to be moved freely between the guides!

14.3.3.2 Mounting a concave diaphragm

Diaphragm sizes 25 - 80

Threaded pin type diaphragm:

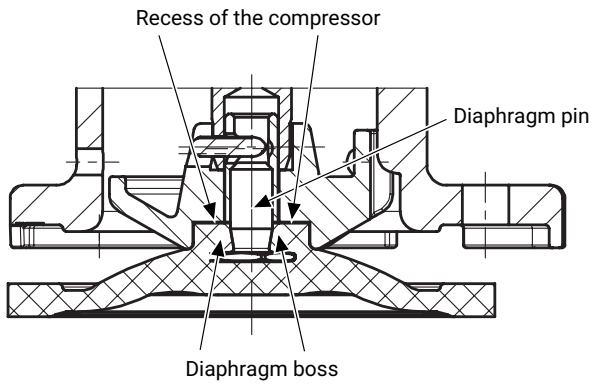

1. Move the actuator **A** to the closed position.
2. Diaphragm sizes 25 - 80: Place the compressor loosely on the actuator spindle, fit the recesses into the guides (see "General information" chapter).
3. Check if the compressor fits closely in the guides.
4. Screw new diaphragm tightly into the compressor manually.
5. Check if the diaphragm boss fits closely in the recess of the compressor.
6. If it is difficult to screw it in, check the thread, replace damaged parts (only use genuine parts from GEMÜ).
7. When clear resistance is felt, turn back the backing diaphragm anticlockwise until its bolt holes are in correct alignment with the bolt holes of the actuator.

14.3.4 Pulsation damper assembly (actuator on pressure compensator)

1. Move the actuator **A** to the open position.
2. Place the actuator **A** with the mounted diaphragm **2** on the pulsation damper body **1**.
3. Tighten bolts **18**, washers **19** and nuts **20** by hand. (Fastening elements may vary depending on the diaphragm size and/or pulsation damper body version.)
4. Move the actuator **A** to the closed position.
5. Fully tighten the bolts **18** with nuts **20** diagonally.

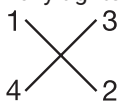

6. Ensure even compression of diaphragm **2** (approx. 10 to 15%). Even compression is detected by an even bulge to the outside.
7. Check the fully assembled pulsation damper for leaks.

NOTICE

- Service and maintenance:
  Diaphragms set in the course of time. After disassembly/assembly of the pulsation damper, check that the bolts **18** and nuts **20** on the body are tight, and retighten if required. Retighten the bolts and nuts at the very latest after the first sterilization process.

15 Removal from piping

1. Disassemble the product. Observe warning notes and safety information.
2. Remove in reverse order to installation.

16 Disposal

1. Pay attention to adhered residual material and gas diffusion from penetrated media.
2. Dispose of all parts in accordance with the disposal regulations/environmental protection laws.

17 Returns

Legal regulations for the protection of the environment and personnel require that the completed and signed return delivery note is included with the dispatch documents. Returned goods can be processed only when this note is completed. If no return delivery note is included with the product, GEMÜ cannot process credits or repair work but will dispose of the goods at the operator's expense.

1. Clean the product.
2. Request a return delivery note from GEMÜ.
3. Complete the return delivery note.
4. Send the product with a completed return delivery note to GEMÜ.

18 EU Declaration of Incorporation according to the EC Machinery Directive 2006/42/EC

EU Declaration of Incorporation

according to the EC Machinery Directive 2006/42/EC, Annex II B

We, the company	GEMÜ Gebr. Müller Apparatebau GmbH & Co. KG Fritz-Müller-Strasse 6–8 74653 Ingelfingen-Criesbach, Germany

hereby declare under our sole responsibility that the below-mentioned product complies with the relevant essential health and safety requirements in accordance with Annex I of the above-mentioned Directive.

Product:	GEMÜ 652
Product name:	Pulsation damper
The following essential health and safety requirements of the EC Machinery Directive 2006/42/EC, Annex I have been applied or adhered to:	1.1.2.; 1.1.3.; 1.1.5.; 1.3.2.; 1.3.3.; 1.3.4.; 1.3.7.; 1.5.13.; 1.5.3.; 1.5.4.; 1.5.5.; 1.5.8.; 1.5.9.; 1.6.1.; 1.6.5.; 1.7.1.; 1.7.1.1.; 1.7.2.; 1.7.3.; 1.7.4.; 1.7.4.1.; 1.7.4.2.; 1.7.4.3.
The following harmonized standards (or parts thereof) have been applied:	EN ISO 12100:2010

We also declare that the specific technical documents have been created in accordance with part B of Annex VII.

The manufacturer undertakes to transmit relevant technical documents on the partly completed machinery to the national authorities in response to a reasoned request. This communication takes place electronically.

This does not affect the industrial property rights.

The partly completed machinery may be commissioned only if it has been determined, if necessary, that the machinery into which the partly completed machinery is to be installed meets the provisions of the Machinery Directive 2006/42/EC.

M. Barghoorn
Head of Global Technics

Ingelfingen, 08/12/2022

GEMÜ Gebr. Müller Apparatebau GmbH & Co. KG
Fritz-Müller-Straße 6-8 D-74653 Ingelfingen-Criesbach
www.gemu-group.com
info@gemue.de

19 EU Declaration of Conformity in accordance with 2014/68/EU (Pressure Equipment Directive)

EU Declaration of Conformity

in accordance with 2014/68/EU (Pressure Equipment Directive)

We, the company GEMÜ Gebr. Müller Apparatebau GmbH & Co. KG
Fritz-Müller-Strasse 6–8
74653 Ingelfingen-Criesbach, Germany

hereby declare under our sole responsibility that the below-mentioned product complies with the regulations of the above-mentioned Directive.

Product:	GEMÜ 652
Product name:	Pulsation damper
Notified body:	TÜV Rheinland Industrie Service GmbH Am Grauen Stein 1 51105 Cologne, Germany
ID number of the notified body:	0035
No. of the QA certificate:	01 202 926/Q-02 0036
Conformity assessment procedure:	Module H1
The following harmonized standards (or parts thereof) have been applied:	EN 13397:2001

Information for products with a nominal size ≤ DN 25:

The products are developed and produced according to GEMÜ's in-house process instructions and standards of quality which comply with the requirements of ISO 9001 and ISO 14001. According to Article 4, Paragraph 3 of the Pressure Equipment Directive 2014/68/EU, these products must not be identified by a CE-marking.

Other applied technical standards / Remarks:

- AD 2000

M. Barghoorn
Head of Global Technics

Ingelfingen, 08/12/2022

GEMÜ Gebr. Müller Apparatebau GmbH & Co. KG
Fritz-Müller-Straße 6-8 D-74653 Ingelfingen-Criesbach
www.gemu-group.com
info@gemue.de

GEMÜ Gebr. Müller Apparatebau GmbH & Co. KG
Fritz-Müller-Straße 6-8, 74653 Ingelfingen-Criesbach, Germany
Phone +49 (0) 7940 1230 · info@gemue.de
www.gemu-group.com

Subject to alteration

12.2022 | 88832599